No. PF-2B8C

TCM®

PARTS CATALOGUE

FORKLIFT TRUCK

Gas. & Diesel Powered

FG30C3 FD30C3
FG30T3 FD30T3
FG30W3 FD30W3

TCM CORPORATION

ご使用のまえに

このパーツカタログは，TCMフォークリフトの構成部品を収録しています。

部品ご注文について

部品ご注文の際は，必ず車両の形式・仕様・製造番号（号車），部品番号および注文数を明示してください。車両の製造番号（号車）は車両銘板に表示しています。

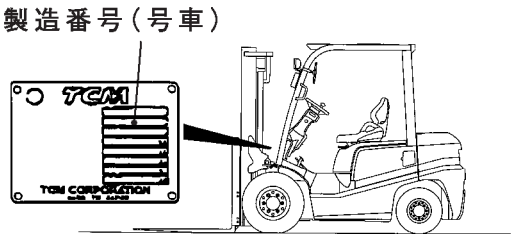

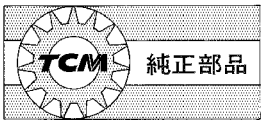

部品は，必ず「TCM純正部品」をご使用ください。
純正部品以外の部品をご使用になり，故障が発生した場合は保証できません。

ご使用について

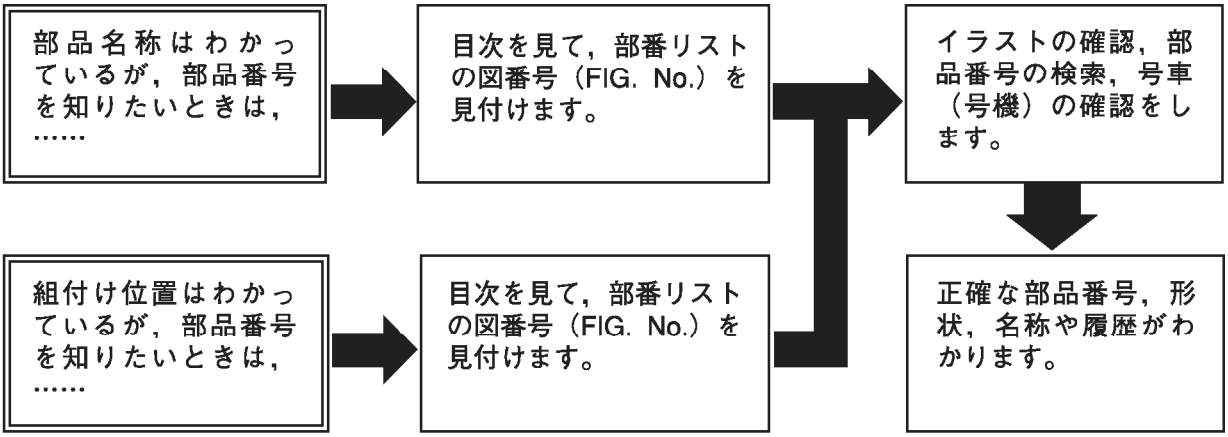

略語および記号

ＡＳＳＹ	組立品を示します。
ＲＨ	車両の前方向に向かって右側を示します。
ＬＨ	車両の前方向に向かって左側を示します。
ＡＲ	必要に応じた数を使用します。
＊	セットおよびキットの販売部品を示します。
Ｔ	厚みを示します。
＋	図示していません。
＃	単体販売しません。

部品は，品質向上のため予告なく変更することがありますので，あらかじめご了承ください。
詳細は，TCM指定整備工場にご相談ください。

INTRODUCTION

This Parts Catalogue contains the component parts of the TCM FORKLIFT TRUCK.

How to order parts

When ordering, be sure to specify the model name, specification and serial number (machine number) of your machine, as well as the part number and desired quantity for each part. The machine serial number (machine number) is indicated on the machine name plate.

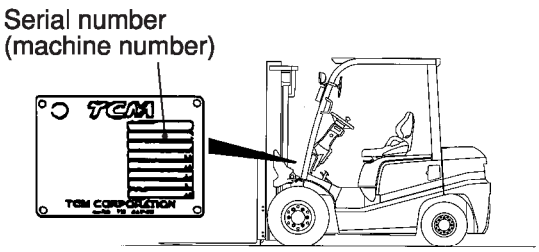

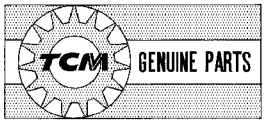

Always use "TCM's Genuine Parts". We cannot guarantee any loss or trouble attributable to other parts than ours.

How to use the Parts Catalogue

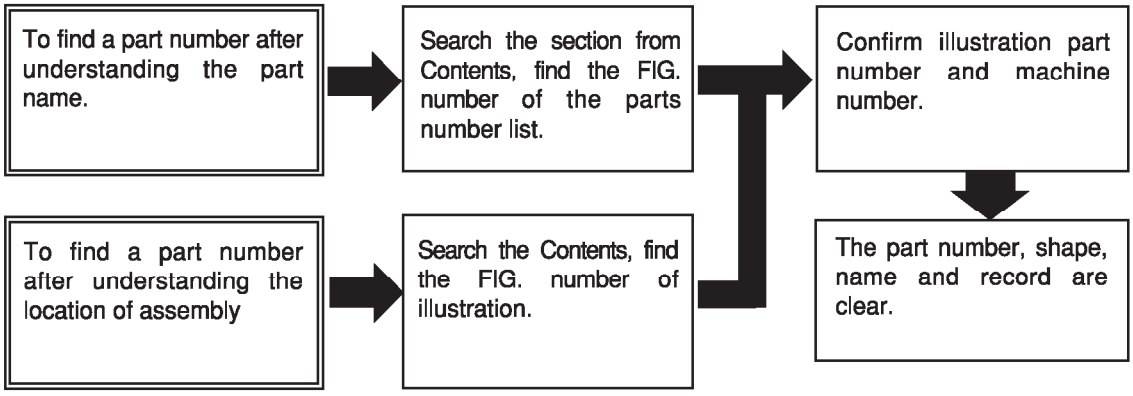

Abbreviations and symbols

ASSY ···	Assembled unit.
RH ·····	Right-hand when viewed forward on the truck.
LH ·····	Left-hand when viewed forward on the truck.
AR ·····	Quantity required.
* ·····	The marketable part set or kit.
T ·····	Thickness.
+ ·····	Not illustrated.
# ·····	Not sold separately.

Materals and specifications subject to change without notice.

CONTENTS　目次

CHASSIS ｼｬｰｼ

a	FG30C3	d	FD30C3
b	FG30T3	e	FD30T3
c	FG30W3	f	FD30W3

SECTION　部門	a	b	c	d	e	f	FIG. NO.
ENGINE MOUNT (GASOLINE) ｴﾝｼﾞﾝﾏｳﾝﾄ	○	○	○				1
ENGINE MOUNT (DIESEL) ｴﾝｼﾞﾝﾏｳﾝﾄ				○	○	○	2
AIR CLEANER (GASOLINE) ｴｱｰｸﾘｰﾅ	○	○	○				3
AIR CLEANER (DIESEL) ｴｱｰｸﾘｰﾅ				○	○	○	4
AIR DUCT (GASOLINE) ｴｱｰﾀﾞｸﾄ	○	○	○				5
AIR DUCT (DIESEL) ｴｱｰﾀﾞｸﾄ				○	○	○	6
AIR DUCT (GASOLINE):[CAKB] ｴｱｰﾀﾞｸﾄ	○	○	○				7
AIR DUCT (DIESEL):[CAKB] ｴｱｰﾀﾞｸﾄ				○	○	○	8
COOLING UNIT (CLUTCH)(OIL CLUTCH) ｸｰﾘﾝｸﾞﾕﾆｯﾄ	○		○	○		○	9
COOLING UNIT (TOR-CON) ｸｰﾘﾝｸﾞﾕﾆｯﾄ		○			○		10
FAN SHROUD (GASOLINE) ﾌｧﾝｼｭﾗｳﾄﾞ	○	○	○				11
FAN SHROUD (DIESEL) ﾌｧﾝｼｭﾗｳﾄﾞ				○	○	○	12
RADIATOR PARTS & RESERVE TANK ﾗｼﾞｴｰﾀﾊﾟｰﾂ&ﾘｻﾞｰﾌﾞﾀﾝｸ	○	○	○	○	○	○	13
RADIATOR HOSE (GASOLINE) ﾗｼﾞｴｰﾀﾎｰｽ	○	○	○				14
RADIATOR HOSE (DIESEL) ﾗｼﾞｴｰﾀﾎｰｽ				○	○	○	15
DUST SCREEN [DSR006][DSR008] ﾀﾞｽﾄｽｸﾘｰﾝ	○	○	○	○	○		16
FUEL SYSTEM (GASOLINE) ﾌｭｰｴﾙｼｽﾃﾑ	○	○	○				17
FUEL SYSTEM (DIESEL) ﾌｭｰｴﾙｼｽﾃﾑ				○	○	○	18
EXHAUST SYSTEM ｴｷｿﾞｰｽﾄｼｽﾃﾑ	○	○	○	○	○	○	19
EXHAUST SYSTEM [TUE] ｴｷｿﾞｰｽﾄｼｽﾃﾑ	○	○	○	○	○	○	20
EXHAUST SYSTEM (DIESEL):[DPF] ｴｷｿﾞｰｽﾄｼｽﾃﾑ				○	○		21

CONTENTS　目次

CHASSIS シャーシ

a	FG30C3	d	FD30C3
b	FG30T3	e	FD30T3
c	FG30W3	f	FD30W3

SECTION　部門	a	b	c	d	e	f	FIG. NO.
DPF WIRE HARNESS (DIESEL):[DPF] DPFﾜｲﾔﾊｰﾈｽ				○	○		22
FRONT TUBE & JOINT (GASOLINE) ﾌﾛﾝﾄﾁｭｰﾌﾞ&ｼﾞｮｲﾝﾄ	○	○	○				23
FRONT TUBE & JOINT (DIESEL) ﾌﾛﾝﾄﾁｭｰﾌﾞ&ｼﾞｮｲﾝﾄ				○	○	○	24
FRONT TUBE & JOINT (DIESEL):[DPF] ﾌﾛﾝﾄﾁｭｰﾌﾞ&ｼﾞｮｲﾝﾄ				○	○		25
COMBINATION METER ｺﾝﾋﾞﾈｰｼｮﾝﾒｰﾀ	○	○	○	○	○	○	26
FRONT GUARD WIRE HARNESS (CLUTCH)(OIL CLUTCH) ﾌﾛﾝﾄｶﾞｰﾄﾞﾜｲﾔﾊｰﾈｽ	○		○	○		○	27
FRONT GUARD WIRE HARNESS (TOR-CON) ﾌﾛﾝﾄｶﾞｰﾄﾞﾜｲﾔﾊｰﾈｽ		○			○		28
COMBINATION SWITCH (CLUTCH)(OIL CLUTCH) ｺﾝﾋﾞﾈｰｼｮﾝｽｲｯﾁ	○		○	○		○	29
COMBINATION SWITCH (TOR-CON) ｺﾝﾋﾞﾈｰｼｮﾝｽｲｯﾁ		○			○		30
ELECTRIC PARTS (GASOLINE:CLUTCH & OIL CLUTCH) ｴﾚｸﾄﾘｯｸﾊﾟｰﾂ	○		○				31
ELECTRIC PARTS (GASOLINE:TOR-CON) ｴﾚｸﾄﾘｯｸﾊﾟｰﾂ		○					32
ELECTRIC PARTS (DIESEL:CLUTCH & OIL CLUTCH) ｴﾚｸﾄﾘｯｸﾊﾟｰﾂ				○		○	33
ELECTRIC PARTS (DIESEL:TOR-CON) ｴﾚｸﾄﾘｯｸﾊﾟｰﾂ					○		34
ENGINE WIRE HARNESS (GASOLINE:CLUTCH & OIL CLUTCH) ｴﾝｼﾞﾝﾜｲﾔﾊｰﾈｽ	○		○				35
ENGINE WIRE HARNESS (GASOLINE:TOR-CON) ｴﾝｼﾞﾝﾜｲﾔﾊｰﾈｽ		○					36
ENGINE WIRE HARNESS (DIESEL:CLUTCH & OIL CLUTCH) ｴﾝｼﾞﾝﾜｲﾔﾊｰﾈｽ				○		○	37
ENGINE WIRE HARNESS (DIESEL:TOR-CON) ｴﾝｼﾞﾝﾜｲﾔﾊｰﾈｽ					○		38
BATTERY (GASOLINE) ﾊﾞｯﾃﾘ	○	○	○				39
BATTERY (DIESEL) ﾊﾞｯﾃﾘ				○	○	○	40
HEAD LAMP & FRONT COMBINATION LAMP ﾍｯﾄﾞﾗﾝﾌﾟ&ﾌﾛﾝﾄｺﾝﾋﾞﾈｰｼｮﾝﾗﾝﾌﾟ	○	○	○	○	○	○	41
REAR COMBINATION LAMP ﾘﾔｰｺﾝﾋﾞﾈｰｼｮﾝﾗﾝﾌﾟ	○	○	○	○	○	○	42

CONTENTS　目次

CHASSIS シャーシ

a	FG30C3	d	FD30C3
b	FG30T3	e	FD30T3
c	FG30W3	f	FD30W3

SECTION　部門	a	b	c	d	e	f	FIG. NO.
REAR COMBINATION LAMP [RRE][SCB001][SCBCR] ﾘﾔｰｺﾝﾋﾞﾈｰｼｮﾝﾗﾝﾌﾟ	○	○	○	○	○	○	43
LICENSE LAMP [RRE] ﾗｲｾﾝｽﾗﾝﾌﾟ	○	○	○	○	○	○	44
LICENSE LAMP [SCB001/RRE][SCBCR/RRE] ﾗｲｾﾝｽﾗﾝﾌﾟ	○	○	○	○	○	○	45
LICENSE LAMP [RRE/LPG][RRE/LPO] ﾗｲｾﾝｽﾗﾝﾌﾟ	○	○	○				46
LICENSE LAMP [LP] ﾗｲｾﾝｽﾗﾝﾌﾟ	○	○	○	○	○	○	47
REAR WORKING LIGHT [RWLR] ﾘﾔｰﾜｰｷﾝｸﾞﾗｲﾄ	○	○	○	○	○	○	48
REAR WORKING LIGHT [RWLL] ﾘﾔｰﾜｰｷﾝｸﾞﾗｲﾄ	○	○	○	○	○	○	49
REAR WORKING LIGHT [RWL2] ﾘﾔｰﾜｰｷﾝｸﾞﾗｲﾄ	○	○	○	○	○	○	50
REAR WORKING LIGHT WIRE HARNESS [RWL] ﾘﾔｰﾜｰｷﾝｸﾞﾗｲﾄﾜｲﾔﾊｰﾈｽ	○	○	○	○	○	○	51
REAR WORKING LIGHT WIRE HARNESS [RWL/BBR] ﾘﾔｰﾜｰｷﾝｸﾞﾗｲﾄﾜｲﾔﾊｰﾈｽ	○	○	○	○	○	○	52
REVOLVING LIGHT [RLY][RLR] ﾘﾎﾞﾙﾋﾞﾝｸﾞﾗｲﾄ	○	○	○	○	○	○	53
REVOLVING LIGHT WIRE HARNESS [RLY][RLR] ﾘﾎﾞﾙﾋﾞﾝｸﾞﾗｲﾄﾜｲﾔﾊｰﾈｽ	○	○	○	○	○	○	54
BACK BUZZER ﾊﾞｯｸﾌﾞｻﾞｰ	○	○	○	○	○	○	55
HEATER UNIT [HR] ﾋｰﾀﾕﾆｯﾄ	○	○	○	○	○	○	56
HEATER VALVE & ELBOW [HR] ﾋｰﾀﾊﾞﾙﾌﾞ&ｴﾙﾎﾞ	○	○	○	○	○	○	57
DRIVE UNIT MOUNT (CLUTCH) ﾄﾞﾗｲﾌﾞﾕﾆｯﾄﾏｳﾝﾄ	○			○			58
DRIVE UNIT MOUNT (TOR-CON) ﾄﾞﾗｲﾌﾞﾕﾆｯﾄﾏｳﾝﾄ		○			○		59
DRIVE UNIT MOUNT (OIL CLUTCH) ﾄﾞﾗｲﾌﾞﾕﾆｯﾄﾏｳﾝﾄ			○			○	60
CHANGE LEVER (CLUTCH)(OIL CLUTCH) ﾁｪﾝｼﾞﾚﾊﾞｰ	○		○	○		○	61
CLUTCH (CLUTCH) ｸﾗｯﾁ	○			○			62
MISSION CASE (CLUTCH)(OIL CLUTCH) ﾐｯｼｮﾝｹｰｽ	○		○	○		○	63

CONTENTS　目次

CHASSIS シャーシ

a	FG30C3	d	FD30C3
b	FG30T3	e	FD30T3
c	FG30W3	f	FD30W3

SECTION　部門	a	b	c	d	e	f	FIG. NO.
MISSION GEAR (CLUTCH)(OIL CLUTCH) ﾐｯｼｮﾝｷﾞﾔｰ	○		○	○		○	64
TORQUE CONVERTER CASE (TOR-CON) ﾄﾙｸｺﾝﾊﾞｰﾀｹｰｽ		○			○		65
CHARGING PUMP (TOR-CON) ﾁｬｰｼﾞﾝｸﾞﾎﾟﾝﾌﾟ		○			○		66
MISSION CASE (TOR-CON) ﾐｯｼｮﾝｹｰｽ		○			○		67
CLUTCH PACK (TOR-CON) ｸﾗｯﾁﾊﾟｯｸ		○			○		68
CONTROL VALVE (TOR-CON) ｺﾝﾄﾛｰﾙﾊﾞﾙﾌﾞ		○			○		69
CLUTCH (OIL CLUTCH) ｸﾗｯﾁ			○			○	70
SPOT LIGHT [SPL] ｽﾎﾟｯﾄﾗｲﾄ	○	○	○	○	○	○	71
FAN [FAN] ﾌｧﾝ	○	○	○	○	○	○	72
LIFT LOCK VALVE WIRE HARNESS [VLL] ﾘﾌﾄﾛｯｸﾊﾞﾙﾌﾞﾜｲﾔﾊｰﾈｽ	○	○	○	○	○	○	73
AMMETER [AM] ｱﾝﾒｰﾀ	○	○	○	○	○	○	74
SPEED METER [SM] ｽﾋﾟｰﾄﾞﾒｰﾀ	○	○	○	○	○	○	75
TORQUE CONVERTER THERMOMETER [TTM] ﾄﾙｸｺﾝﾊﾞｰﾀｻｰﾓﾒｰﾀ		○			○		76
TORQUE CONVERTER PRESSURE METER [TPM] ﾄﾙｸｺﾝﾊﾞｰﾀﾌﾟﾚｯｼｬﾒｰﾀ		○			○		77
SPEED DETECTOR UNIT [SAS] ｽﾋﾟｰﾄﾞﾃﾞｨﾃｸﾀﾕﾆｯﾄ	○	○	○	○	○	○	78
SPEED ALARM SYSTEM [SASB] ｽﾋﾟｰﾄﾞｱﾗｰﾑｼｽﾃﾑ	○	○	○	○	○	○	79
SPEED ALARM SYSTEM [SASR] ｽﾋﾟｰﾄﾞｱﾗｰﾑｼｽﾃﾑ	○	○	○	○	○	○	80
SPEED ALARM SYSTEM [SASC] ｽﾋﾟｰﾄﾞｱﾗｰﾑｼｽﾃﾑ	○	○	○	○	○	○	81
OK MONITOR [OKM] OKﾓﾆﾀ	○	○	○	○	○	○	82
INTERLOCK (GASOLINE:CLUTCH & OIL CLUTCH)[SIL][EXE][EXN] ｲﾝﾀｰﾛｯｸ	○		○				83
INTERLOCK (GASOLINE:TOR-CON)[SIL][EXE][EXN] ｲﾝﾀｰﾛｯｸ		○					84

CONTENTS　目次

CHASSIS シャーシ

a	FG30C3	d	FD30C3
b	FG30T3	e	FD30T3
c	FG30W3	f	FD30W3

SECTION　部門	a	b	c	d	e	f	FIG. NO.
INTERLOCK (DIESEL:CLUTCH & OIL CLUTCH)[SIL][EXE][EXN] ｲﾝﾀｰﾛｯｸ				○		○	85
INTERLOCK (DIESEL:TOR-CON)[SIL][EXE][EXN] ｲﾝﾀｰﾛｯｸ					○		86
DRIVE AXLE ﾄﾞﾗｲﾌﾞｱｸｽﾙ	○	○	○	○	○	○	87
DRUM HUB ﾄﾞﾗﾑﾊﾌﾞ	○	○	○	○	○	○	88
PROPELLER SHAFT ﾌﾟﾛﾍﾟﾗｼｬﾌﾄ	○	○	○	○	○	○	89
REDUCTION & DIFFERENTIAL ﾘﾀﾞｸｼｮﾝ&ﾃﾞｨﾌｧﾚﾝｼｬﾙ	○	○	○	○	○	○	90
REDUCTION ﾘﾀﾞｸｼｮﾝ	○	○	○	○	○	○	91
DIFFERENTIAL ﾃﾞｨﾌｧﾚﾝｼｬﾙ	○	○	○	○	○	○	92
WHEEL BRAKE ﾎｲｰﾙﾌﾞﾚｰｷ	○	○	○	○	○	○	93
STEERING WHEEL UNIT ｽﾃｱﾘﾝｸﾞﾎｲｰﾙﾕﾆｯﾄ	○	○	○	○	○	○	94
ORBITROL ｵｰﾋﾞｯﾄﾛｰﾙ	○	○	○	○	○	○	95
ORBITROL [EXE][EXK][EXN] ｵｰﾋﾞｯﾄﾛｰﾙ	○	○		○	○		96
ORBITROL FITTING ｵｰﾋﾞｯﾄﾛｰﾙﾌｨｯﾃｨﾝｸﾞ	○	○	○	○	○	○	97
STEERING AXLE ｽﾃｱﾘﾝｸﾞｱｸｽﾙ	○	○	○	○	○	○	98
STEERING AXLE [EXE][EXK][EXN] ｽﾃｱﾘﾝｸﾞｱｸｽﾙ	○	○		○	○		99
AXLE SUPPORT ｱｸｽﾙｻﾎﾟｰﾄ	○	○	○	○	○	○	100
HUB NUT ﾊﾌﾞﾅｯﾄ	○	○	○	○	○	○	101
FENDER ﾌｪﾝﾀﾞ	○	○	○	○	○	○	102
FRONT WHEEL ﾌﾛﾝﾄﾎｲｰﾙ	○	○	○	○	○	○	103
FRONT WHEEL [TJ F][TJSF][TS F] ﾌﾛﾝﾄﾎｲｰﾙ	○	○	○	○	○	○	104
FRONT WHEEL [TSUF][TUJF][TUSF][TUWF][TUGF] ﾌﾛﾝﾄﾎｲｰﾙ	○	○	○	○	○	○	105

CONTENTS　目次

CHASSIS シャーシ

a	FG30C3	d	FD30C3
b	FG30T3	e	FD30T3
c	FG30W3	f	FD30W3

SECTION　部門	a	b	c	d	e	f	FIG. NO.
FRONT WHEEL [TRAF] ﾌﾛﾝﾄﾎｲｰﾙ	○	○	○	○	○	○	106
FRONT WHEEL [TUJSF] ﾌﾛﾝﾄﾎｲｰﾙ	○	○	○	○	○	○	107
FRONT WHEEL [TJ W][TJSW][TS W] ﾌﾛﾝﾄﾎｲｰﾙ	○	○	○	○	○	○	108
FRONT WHEEL [TUJW][TUSW][TUWW][TUGW] ﾌﾛﾝﾄﾎｲｰﾙ	○	○	○	○	○	○	109
FRONT WHEEL [TJ W28][TJSW28][TS W28] ﾌﾛﾝﾄﾎｲｰﾙ	○	○	○	○	○	○	110
REAR WHEEL ﾘﾔｰﾎｲｰﾙ	○	○	○	○	○	○	111
REAR WHEEL [DR R] ﾘﾔｰﾎｲｰﾙ	○	○	○	○	○	○	112
REAR WHEEL [TJ R][TJSR][TS R] ﾘﾔｰﾎｲｰﾙ	○	○	○	○	○	○	113
REAR WHEEL [(TJ R,TJSR,TS R)/DR R] ﾘﾔｰﾎｲｰﾙ	○	○	○	○	○	○	114
REAR WHEEL [TSUR][TUJR][TUSR][TUWR][TUGR] ﾘﾔｰﾎｲｰﾙ	○	○	○	○	○	○	115
REAR WHEEL [TUJR/DR R] ﾘﾔｰﾎｲｰﾙ	○	○	○	○	○	○	116
REAR WHEEL [TRAR] ﾘﾔｰﾎｲｰﾙ	○	○	○	○	○	○	117
POWER CYLINDER ﾊﾟﾜｰｼﾘﾝﾀﾞ	○	○	○	○	○	○	118
OVERHEAD GUARD ｵｰﾊﾞﾍｯﾄﾞｶﾞｰﾄﾞ	○	○	○	○	○	○	119
FRONT LAMP BRACKET ﾌﾛﾝﾄﾗﾝﾌﾟﾌﾞﾗｹｯﾄ	○	○	○	○	○	○	120
FRONT LAMP BRACKET [HL][BKH] ﾌﾛﾝﾄﾗﾝﾌﾟﾌﾞﾗｹｯﾄ	○	○	○	○	○	○	121
REAR LAMP COVER ﾘﾔｰﾗﾝﾌﾟｶﾊﾞｰ	○	○	○	○	○	○	122
REAR LAMP COVER [RRE] ﾘﾔｰﾗﾝﾌﾟｶﾊﾞｰ	○	○	○	○	○	○	123
HEAD GUARD PARTS ﾍｯﾄﾞｶﾞｰﾄﾞﾊﾟｰﾂ	○	○	○	○	○	○	124
ACCEL PEDAL (GASOLINE) ｱｸｾﾙﾍﾟﾀﾞﾙ	○	○	○				125
ACCEL PEDAL (DIESEL) ｱｸｾﾙﾍﾟﾀﾞﾙ				○	○	○	126

CONTENTS　目次

CHASSIS シャーシ

a	FG30C3	d	FD30C3
b	FG30T3	e	FD30T3
c	FG30W3	f	FD30W3

SECTION　部門	a	b	c	d	e	f	FIG. NO.
FOOT PEDAL (CLUTCH) ﾌｯﾄﾍﾟﾀﾞﾙ	○	○	○	○	○	○	127
FOOT PEDAL (TOR-CON) ﾌｯﾄﾍﾟﾀﾞﾙ	○	○	○	○	○	○	128
FOOT PEDAL (OIL CLUTCH) ﾌｯﾄﾍﾟﾀﾞﾙ	○	○	○			○	129
FOOT PEDAL CYLINDER (CLUTCH) ﾌｯﾄﾍﾟﾀﾞﾙｼﾘﾝﾀﾞ	○		○	○			130
FOOT PEDAL CYLINDER (TOR-CON) ﾌｯﾄﾍﾟﾀﾞﾙｼﾘﾝﾀﾞ		○		○	○		131
FOOT PEDAL CYLINDER (OIL CLUTCH) ﾌｯﾄﾍﾟﾀﾞﾙｼﾘﾝﾀﾞ			○			○	132
BRAKE PIPE (CLUTCH) ﾌﾞﾚｰｷﾊﾟｲﾌﾟ	○	○	○	○	○	○	133
BRAKE PIPE (TOR-CON) ﾌﾞﾚｰｷﾊﾟｲﾌﾟ	○	○	○	○	○	○	134
BRAKE PIPE (OIL CLUTCH) ﾌﾞﾚｰｷﾊﾟｲﾌﾟ	○	○	○	○	○	○	135
FOOT PEDAL PARTS ﾌｯﾄﾍﾟﾀﾞﾙﾊﾟｰﾂ	○	○	○	○	○	○	136
CLUTCH MASTER CYLINDER (CLUTCH) ｸﾗｯﾁﾏｽﾀｼﾘﾝﾀﾞ	○		○	○		○	137
CLUTCH MASTER CYLINDER (OIL CLUTCH) ｸﾗｯﾁﾏｽﾀｼﾘﾝﾀﾞ	○	○	○	○	○	○	138
BRAKE MASTER CYLINDER ﾌﾞﾚｰｷﾏｽﾀｼﾘﾝﾀﾞ	○	○	○	○	○	○	139
CLUTCH RELEASE CYLINDER (CLUTCH) ｸﾗｯﾁﾘﾘｰｽｼﾘﾝﾀﾞ	○	○	○	○	○	○	140
CLUTCH RELEASE CYLINDER (OIL CLUTCH) ｸﾗｯﾁﾘﾘｰｽｼﾘﾝﾀﾞ	○	○	○	○	○	○	141
BRAKE LEVER ﾌﾞﾚｰｷﾚﾊﾞｰ	○	○	○	○	○	○	142
FRAME ﾌﾚｰﾑ	○	○	○	○	○	○	143
OIL TANK ｵｲﾙﾀﾝｸ	○	○	○	○	○	○	144
OIL CAP & LEVEL ｵｲﾙｷｬｯﾌﾟ&ﾚﾍﾞﾙ	○	○	○	○	○	○	145
FUEL TANK (GASOLINE) ﾌｭｰｴﾙﾀﾝｸ	○	○	○				146
FUEL TANK (DIESEL) ﾌｭｰｴﾙﾀﾝｸ				○	○	○	147

CONTENTS　目次

CHASSIS シャーシ

a	FG30C3	d	FD30C3
b	FG30T3	e	FD30T3
c	FG30W3	f	FD30W3

SECTION　部門	a	b	c	d	e	f	FIG. NO.
BALANCE WEIGHT ﾊﾞﾗﾝｽｳｴｲﾄ	○	○	○	○	○	○	148
BALANCE WEIGHT [HC] ﾊﾞﾗﾝｽｳｴｲﾄ	○	○	○	○	○	○	149
FRONT GUARD ﾌﾛﾝﾄｶﾞｰﾄﾞ	○	○	○	○	○	○	150
BONNET ﾎﾞﾝﾈｯﾄ	○	○	○	○	○	○	151
RADIATOR COVER ﾗｼﾞｴｰﾀｶﾊﾞｰ	○	○	○	○	○	○	152
BONNET HINGE ﾎﾞﾝﾈｯﾄﾋﾝｼﾞ	○	○	○	○	○	○	153
FLOOR BOARD ﾌﾛｱﾎﾞｰﾄﾞ	○	○	○	○	○	○	154
STEP & FLOOR MAT ｽﾃｯﾌﾟ&ﾌﾛｱﾏｯﾄ	○	○	○	○	○	○	155
FRONT COVER (CLUTCH)(OIL CLUTCH) ﾌﾛﾝﾄｶﾊﾞｰ	○		○	○		○	156
FRONT COVER (TOR-CON) ﾌﾛﾝﾄｶﾊﾞｰ		○			○		157
FRONT COVER (TOR-CON):[EXN] ﾌﾛﾝﾄｶﾊﾞｰ		○			○		158
SIDE COVER ｻｲﾄﾞｶﾊﾞｰ	○	○	○	○	○	○	159
SIDE COVER [SCB001][SCBCR] ｻｲﾄﾞｶﾊﾞｰ	○	○	○	○	○	○	160
FRONT SIDE COVER ﾌﾛﾝﾄｻｲﾄﾞｶﾊﾞｰ	○	○	○	○	○	○	161
SEAT ｼｰﾄ	○	○	○	○	○	○	162
SEAT [HGL] ｼｰﾄ	○	○	○	○	○	○	163
PUMP UNIT (CLUTCH)(TOR-CON) ﾎﾟﾝﾌﾟﾕﾆｯﾄ	○	○		○	○		164
PUMP UNIT (OIL CLUTCH) ﾎﾟﾝﾌﾟﾕﾆｯﾄ			○			○	165
CONTROL VALVE [2SV] ｺﾝﾄﾛｰﾙﾊﾞﾙﾌﾞ	○	○	○	○	○	○	166
CONTROL VALVE [3SV] ｺﾝﾄﾛｰﾙﾊﾞﾙﾌﾞ	○	○	○	○	○	○	167
CONTROL VALVE [4SV] ｺﾝﾄﾛｰﾙﾊﾞﾙﾌﾞ	○	○	○	○	○	○	168

CONTENTS　目次

CHASSIS シャーシ

a	FG30C3	d	FD30C3
b	FG30T3	e	FD30T3
c	FG30W3	f	FD30W3

SECTION　部門	a	b	c	d	e	f	FIG. NO.
CONTROL VALVE [5SV] ｺﾝﾄﾛｰﾙﾊﾞﾙﾌﾞ	○	○	○	○	○	○	169
CONTROL VALVE FITTING ｺﾝﾄﾛｰﾙﾊﾞﾙﾌﾞﾌｨｯﾃｨﾝｸﾞ	○	○	○	○	○	○	170
VALVE CONTROL [2SV] ﾊﾞﾙﾌﾞｺﾝﾄﾛｰﾙ	○	○	○	○	○	○	171
VALVE CONTROL [3SV] ﾊﾞﾙﾌﾞｺﾝﾄﾛｰﾙ	○	○	○	○	○	○	172
VALVE CONTROL [4SV] ﾊﾞﾙﾌﾞｺﾝﾄﾛｰﾙ	○	○	○	○	○	○	173
VALVE CONTROL [5SV] ﾊﾞﾙﾌﾞｺﾝﾄﾛｰﾙ	○	○	○	○	○	○	174
VALVE CONTROL KNOB ﾊﾞﾙﾌﾞｺﾝﾄﾛｰﾙﾉﾌﾞ	○	○	○	○	○	○	175
HYDRAULIC LINE (MAIN)(1/4)(GASOLINE:CLUTCH & TOR-CON) ﾊｲﾄﾞﾛﾘｯｸﾗｲﾝ(ﾒｲﾝ)(1/4)	○	○					176
HYDRAULIC LINE (MAIN)(1/4)(GASOLINE:OIL CLUTCH) ﾊｲﾄﾞﾛﾘｯｸﾗｲﾝ(ﾒｲﾝ)(1/4)			○				177
HYDRAULIC LINE (MAIN)(1/4)(DIESEL:CLUTCH & TOR-CON) ﾊｲﾄﾞﾛﾘｯｸﾗｲﾝ(ﾒｲﾝ)(1/4)				○	○		178
HYDRAULIC LINE (MAIN)(1/4)(DIESEL:OIL CLUTCH) ﾊｲﾄﾞﾛﾘｯｸﾗｲﾝ(ﾒｲﾝ)(1/4)						○	179
HYDRAULIC LINE (MAIN)(2/4) ﾊｲﾄﾞﾛﾘｯｸﾗｲﾝ(ﾒｲﾝ)(2/4)	○	○	○	○	○	○	180
HYDRAULIC LINE (MAIN)(3/4)(CLUTCH)(TOR-CON) ﾊｲﾄﾞﾛﾘｯｸﾗｲﾝ(ﾒｲﾝ)(3/4)	○	○		○	○		181
HYDRAULIC LINE (MAIN)(3/4)(OIL CLUTCH) ﾊｲﾄﾞﾛﾘｯｸﾗｲﾝ(ﾒｲﾝ)(3/4)			○			○	182
HYDRAULIC LINE (MAIN)(4/4) ﾊｲﾄﾞﾛﾘｯｸﾗｲﾝ(ﾒｲﾝ)(4/4)	○	○	○	○	○	○	183
HYDRAULIC LINE (TOR-CON) ﾊｲﾄﾞﾛﾘｯｸﾗｲﾝ(ﾄﾙｺﾝ)		○			○		184
HYDRAULIC LINE (OIL CLUTCH) ﾊｲﾄﾞﾛﾘｯｸﾗｲﾝ(ｵｲﾙｸﾗｯﾁ)			○			○	185
TILT CYLINDER ﾃｨﾙﾄｼﾘﾝﾀﾞ	○	○	○	○	○	○	186
TILT CYLINDER BOOT [TLB][FC] ﾃｨﾙﾄｼﾘﾝﾀﾞﾌﾞｰﾂ	○	○	○	○	○	○	187
DECAL (1/2) ﾃﾞｶﾙ(1/2)	○	○	○	○	○	○	188
DECAL (2/2) ﾃﾞｶﾙ(2/2)	○	○	○	○	○	○	189

CONTENTS　目次

CHASSIS シャーシ

a	FG30C3	d	FD30C3
b	FG30T3	e	FD30T3
c	FG30W3	f	FD30W3

SECTION　部門	a	b	c	d	e	f	FIG.NO.
DECAL (2/2)[EXB] ﾃﾞｶﾙ(2/2)	○	○		○	○		190
DECAL (2/2)[EXC] ﾃﾞｶﾙ(2/2)	○	○		○	○		191
DECAL (2/2)[EXE] ﾃﾞｶﾙ(2/2)	○	○		○	○		192
DECAL (2/2)[EXK] ﾃﾞｶﾙ(2/2)	○	○		○	○		193
DECAL (2/2)[EXN] ﾃﾞｶﾙ(2/2)	○	○		○	○		194
SERVICE TOOL [TO][EX] ｻｰﾋﾞｽﾂｰﾙ	○	○	○	○	○	○	195

CONTENTS　目次

MAST ﾏｽﾄ

a	FG30C3	d	FD30C3
b	FG30T3	e	FD30T3
c	FG30W3	f	FD30W3

SECTION　部門	a	b	c	d	e	f	FIG. NO.
[VM2N9]							
FORK [VM2N9] ﾌｫｰｸ	○	○	○	○	○	○	196
LIFT BRACKET [VM2N9] ﾘﾌﾄﾌﾞﾗｹｯﾄ	○	○	○	○	○	○	197
BACKREST [VM2N9] ﾊﾞｯｸﾚｽﾄ	○	○	○	○	○	○	198
MAST [VM2N9] ﾏｽﾄ	○	○	○	○	○	○	199
LIFT CYLINDER [VM2N9] ﾘﾌﾄｼﾘﾝﾀﾞ	○	○	○	○	○	○	200
MAST PIPING [VM2N9] ﾏｽﾄﾊﾟｲﾋﾟﾝｸﾞ	○	○	○	○	○	○	201
[VFM2N9]							
FORK [VFM2N9] ﾌｫｰｸ	○	○	○	○	○	○	202
LIFT BRACKET [VFM2N9] ﾘﾌﾄﾌﾞﾗｹｯﾄ	○	○	○	○	○	○	203
BACKREST [VFM2N9] ﾊﾞｯｸﾚｽﾄ	○	○	○	○	○	○	204
MAST [VFM2N9] ﾏｽﾄ	○	○	○	○	○	○	205
TILT GAUGE [VFM2N9/(TG,PPC,PR,PRC,MPC)] ﾃｨﾙﾄｹﾞｰｼﾞ	○	○	○	○	○	○	206
LIFT CYLINDER (FRONT) [VFM2N9] ﾘﾌﾄｼﾘﾝﾀﾞ(ﾌﾛﾝﾄ)	○	○	○	○	○	○	207
LIFT CYLINDER (REAR) [VFM2N9] ﾘﾌﾄｼﾘﾝﾀﾞ(ﾘﾔｰ)	○	○	○	○	○	○	208
MAST PIPING [VFM2N9] ﾏｽﾄﾊﾟｲﾋﾟﾝｸﾞ	○	○	○	○	○	○	209

CONTENTS　目次

MAST ﾏｽﾄ

a	FG30C3	d	FD30C3
b	FG30T3	e	FD30T3
c	FG30W3	f	FD30W3

SECTION　部門	a	b	c	d	e	f	FIG. NO.
[VFHM2N9]							
FORK [VFHM2N9] ﾌｫｰｸ	○	○	○	○	○	○	210
LIFT BRACKET [VFHM2N9] ﾘﾌﾄﾌﾞﾗｹｯﾄ	○	○	○	○	○	○	211
BACKREST [VFHM2N9] ﾊﾞｯｸﾚｽﾄ	○	○	○	○	○	○	212
MAST [VFHM2N9] ﾏｽﾄ	○	○	○	○	○	○	213
TILT GAUGE [VFHM2N9/(TG,PPC,PR,PRC,MPC)] ﾃｨﾙﾄｹﾞｰｼﾞ	○	○	○	○	○	○	214
LIFT CYLINDER (FRONT)[VFHM2N9] ﾘﾌﾄｼﾘﾝﾀﾞ(ﾌﾛﾝﾄ)	○	○	○	○	○	○	215
LIFT CYLINDER (REAR)[VFHM2N9] ﾘﾌﾄｼﾘﾝﾀﾞ(ﾘﾔｰ)	○	○	○	○	○	○	216
MAST PIPING [VFHM2N9] ﾏｽﾄﾊﾟｲﾋﾟﾝｸﾞ	○	○	○	○	○	○	217
[VFHM2N8]							
FORK [VFHM2N8] ﾌｫｰｸ	○	○	○	○	○	○	218
LIFT BRACKET [VFHM2N8] ﾘﾌﾄﾌﾞﾗｹｯﾄ	○	○	○	○	○	○	219
BACKREST [VFHM2N8] ﾊﾞｯｸﾚｽﾄ	○	○	○	○	○	○	220
MAST [VFHM2N8] ﾏｽﾄ	○	○	○	○	○	○	221
LIFT CYLINDER(FRONT) [VFHM2N8] ﾘﾌﾄｼﾘﾝﾀﾞ(ﾌﾛﾝﾄ)	○	○	○	○	○	○	222
LIFT CYLINDER (REAR) [VFHM2N8] ﾘﾌﾄｼﾘﾝﾀﾞ(ﾘﾔｰ)	○	○	○	○	○	○	223
MAST PIPING [VFHM2N8] ﾏｽﾄﾊﾟｲﾋﾟﾝｸﾞ	○	○	○	○	○	○	224

M E M O

FIG.1 ENGINE MOUNT (GASOLINE)

(F7031010) エンジンマウント

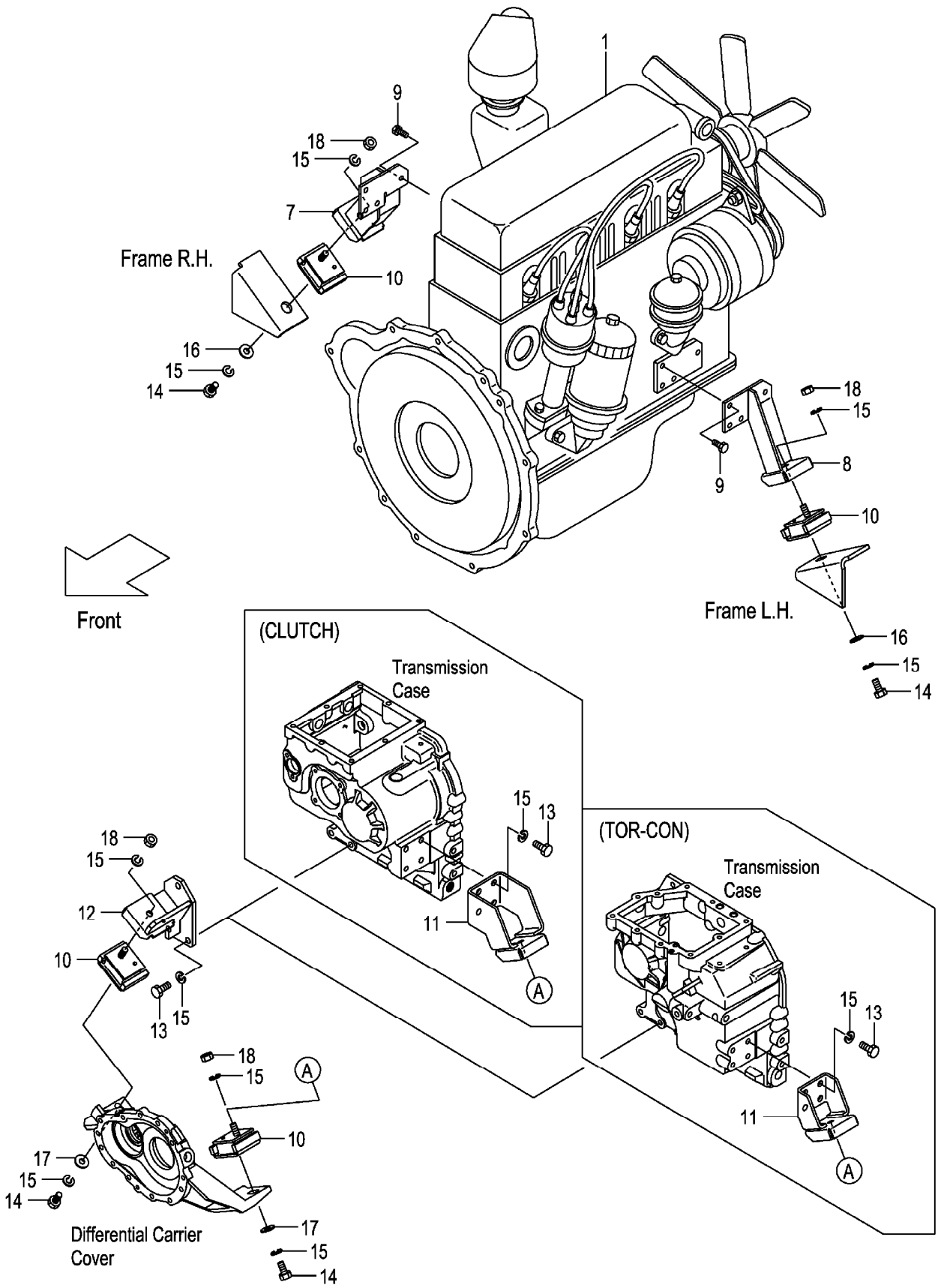

A:FG30C3
B:FG30T3
C:FG30W3

FIG.1
(F7031010)

Item No	Part No.	Mark	Description		Req'd	Remarks : Serial No.
1	22B51-00101		ENGINE,K21	ｴﾝｼﾞﾝ	1	A,B
-	22C41-00101		ENGINE,K21	ｴﾝｼﾞﾝ	1	C
-	52B57-60201		ENGINE,K21	ｴﾝｼﾞﾝ	1	A,B [SCBCR]
-	52C47-60201		ENGINE,K21	ｴﾝｼﾞﾝ	1	C [SCBCR]
-	52B54-70101		ENGINE,K21	ｴﾝｼﾞﾝ	1	A,B [HCS]
-	52B57-60251		ENGINE,K21	ｴﾝｼﾞﾝ	1	A,B [SCBCR/HCS]
2	01400-00008	+	NUT	ﾅｯﾄ	2	
-	01400-00008	+	NUT	ﾅｯﾄ	1	[SCBCR]
3	02010-00008	+	WASHER	ﾜｯｼｬ	2	
-	02010-00008	+	WASHER	ﾜｯｼｬ	1	[SCBCR]
4	02000-00008	+	WASHER	ﾜｯｼｬ	2	
-	02000-00008	+	WASHER	ﾜｯｼｬ	1	[SCBCR]
5	01100-05010	+	BOLT	ﾎﾞﾙﾄ	1	
6	02010-00005	+	WASHER	ﾜｯｼｬ	1	
7	22B51-00211		BRACKET,ENGINE,RH	ﾌﾞﾗｹｯﾄ	1	
8	22B51-00201		BRACKET,ENGINE,LH	ﾌﾞﾗｹｯﾄ	1	
9	01218-10025		BOLT	ﾎﾞﾙﾄ	8	
10	22N51-00161		RUBBER,CUSHION	ﾗﾊﾞｰ	4	
11	22N41-00201		BRACKET,FRONT,LH	ﾌﾞﾗｹｯﾄ	1	A,C
-	22N51-00201		BRACKET,FRONT,LH	ﾌﾞﾗｹｯﾄ	1	B
12	22N51-00211		BRACKET,FRONT,RH	ﾌﾞﾗｹｯﾄ	1	
13	01103-12030		BOLT	ﾎﾞﾙﾄ	7	
14	01103-12025		BOLT	ﾎﾞﾙﾄ	4	
15	02011-00012		WASHER	ﾜｯｼｬ	15	
16	256C6-32011		WASHER	ﾜｯｼｬ	2	
17	256C9-52372		WASHER	ﾜｯｼｬ	2	
18	01400-00012		NUT	ﾅｯﾄ	4	

FIG.2 ENGINE MOUNT (DIESEL)

(F7031020) エンジンマウント

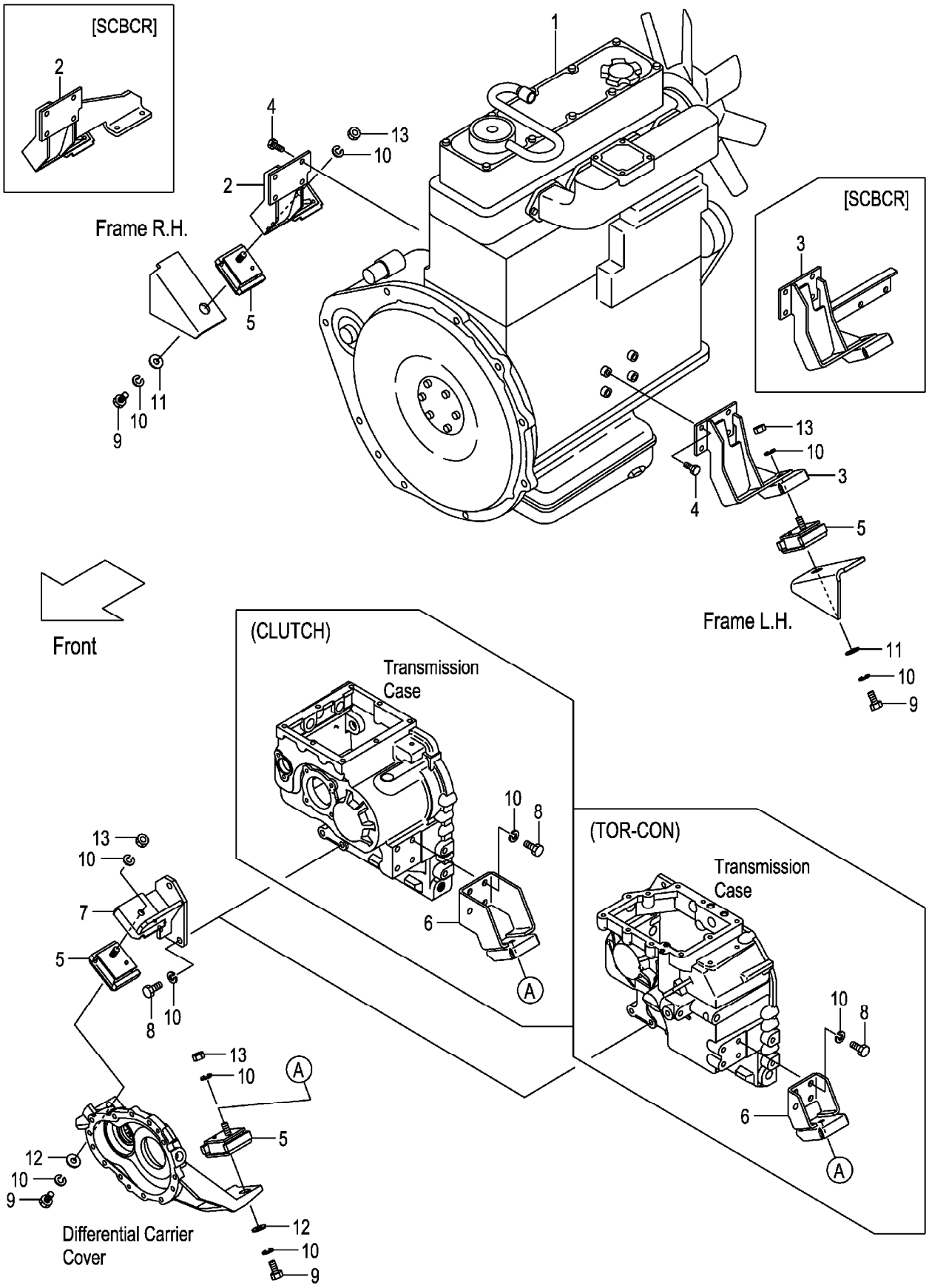

A:FD30C3
B:FD30T3
C:FD30W3

FIG.2
(F7031020)

Item No	Part No.	Mark	Description		Req'd	Remarks : Serial No.
1	22N51-00101		ENGINE,TD27	ｴﾝｼﾞﾝ	1	A,B
-	22P41-00101		ENGINE,TD27	ｴﾝｼﾞﾝ	1	C
2	22N51-00401		BRACKET,ENGINE,RH	ﾌﾞﾗｹｯﾄ	1	A,B
-	22P41-00401		BRACKET,ENGINE,RH	ﾌﾞﾗｹｯﾄ	1	C
-	52N57-60501		BRACKET,ENGINE,RH	ﾌﾞﾗｹｯﾄ	1	A,B
						[SCBCR]
3	22N51-00411		BRACKET,ENGINE,LH	ﾌﾞﾗｹｯﾄ	1	
-	52N57-60511		BRACKET,ENGINE,LH	ﾌﾞﾗｹｯﾄ	1	A,B
						[SCBCR]
4	01218-10035		BOLT	ﾎﾞﾙﾄ	8	
5	22N51-00161		RUBBER,CUSHION	ﾗﾊﾞｰ	4	
6	22N41-00201		BRACKET,FRONT,LH	ﾌﾞﾗｹｯﾄ	1	A,C
-	22N51-00201		BRACKET,FRONT,LH	ﾌﾞﾗｹｯﾄ	1	B
7	22N51-00211		BRACKET,FRONT,RH	ﾌﾞﾗｹｯﾄ	1	
8	01103-12030		BOLT	ﾎﾞﾙﾄ	7	
9	01103-12025		BOLT	ﾎﾞﾙﾄ	4	
10	02011-00012		WASHER	ﾜｯｼｬ	15	
11	256C6-32011		WASHER	ﾜｯｼｬ	2	
12	256C9-52372		WASHER	ﾜｯｼｬ	2	
13	01400-00012		NUT	ﾅｯﾄ	4	

FIG.3 AIR CLEANER (GASOLINE)

(F7031030) エアークリーナ

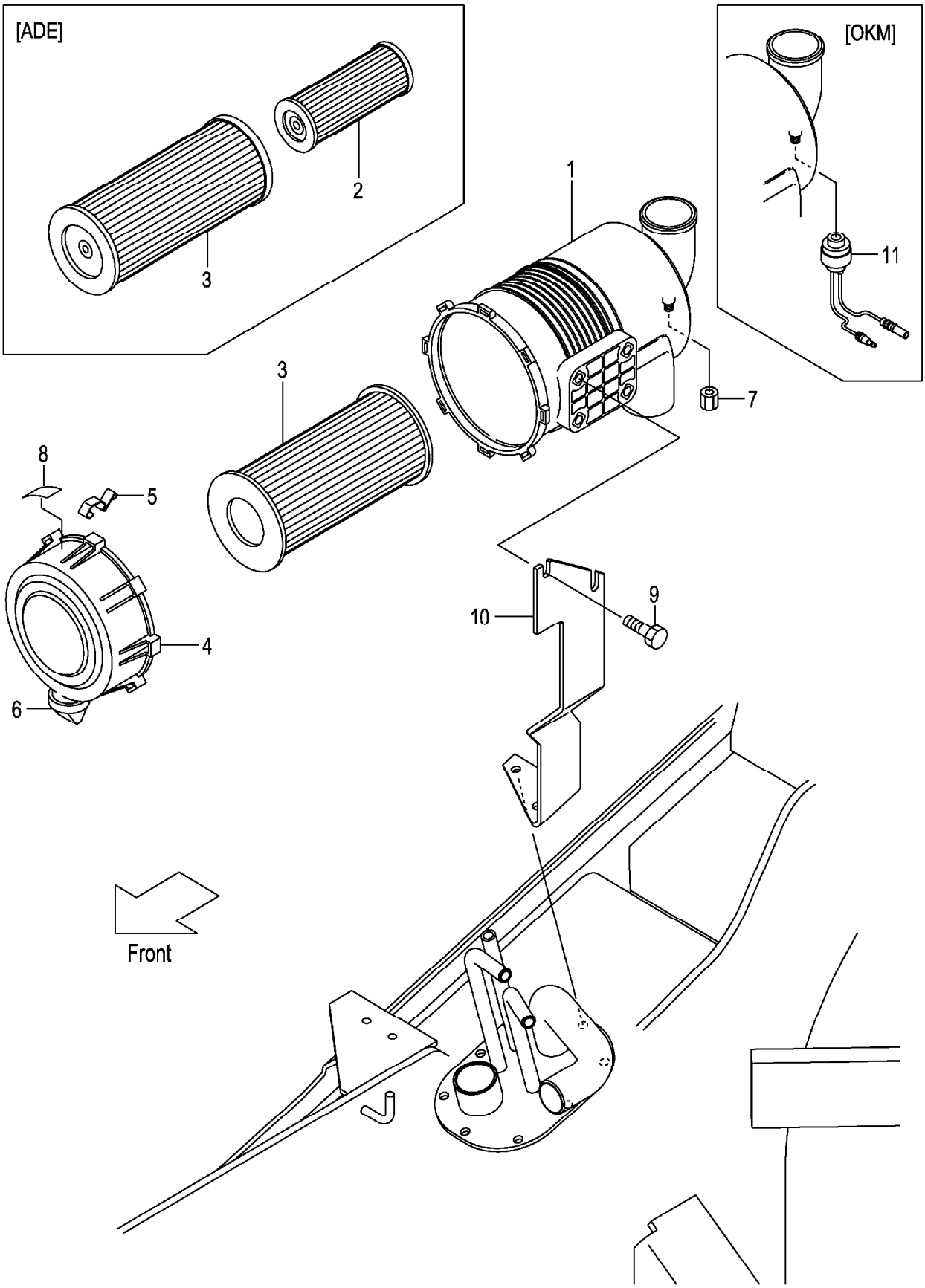

A:FG30C3 FG30T3 FG30W3

Item No	Part No.	Mark	Description		Req'd	Remarks : Serial No.
A1	216G1-02451		CLEANER-ASSY,AIR	ｴｱｰｸﾘｰﾅｱｯｾﾝ	1	INC.1,3-8
-	516G0-60101		CLEANER-ASSY,AIR	ｴｱｰｸﾘｰﾅｱｯｾﾝ	1	[ADE] INC.1-8
1	216G1-02481		BODY	ﾎﾞﾃﾞｨ	1	
2	213T1-02021		ELEMENT,INNER	ｴﾚﾒﾝﾄ	1	[ADE]
3	256C1-08011		ELEMENT,OUTER	ｴﾚﾒﾝﾄ	1	
-	213T1-02011		ELEMENT,OUTER	ｴﾚﾒﾝﾄ	1	[ADE]
4	216G1-02461		COVER	ｶﾊﾞｰ	1	
5	216G1-02471		LATCH	ﾗｯﾁ	3	
6	216G1-02491		VALVE,VACUATOR	ﾊﾞﾙﾌﾞ	1	
7	53651-12551		CAP,NIPPLE	ｷｬｯﾌﾟ	1	
8	216G1-02501		LABEL	ﾗﾍﾞﾙ	1	
-	516G0-62011		LABEL	ﾗﾍﾞﾙ	1	[ADE]
9	01183-08016		BOLT	ﾎﾞﾙﾄ	2	
10	22B51-02001		BRACKET,AIR-CLEANER	ﾌﾞﾗｹｯﾄ	1	
11	54612-42021		SENSOR,635MM	ｾﾝｻ	1	[OKM]

FIG.4 AIR CLEANER (DIESEL)

(F7031040) エアークリーナ

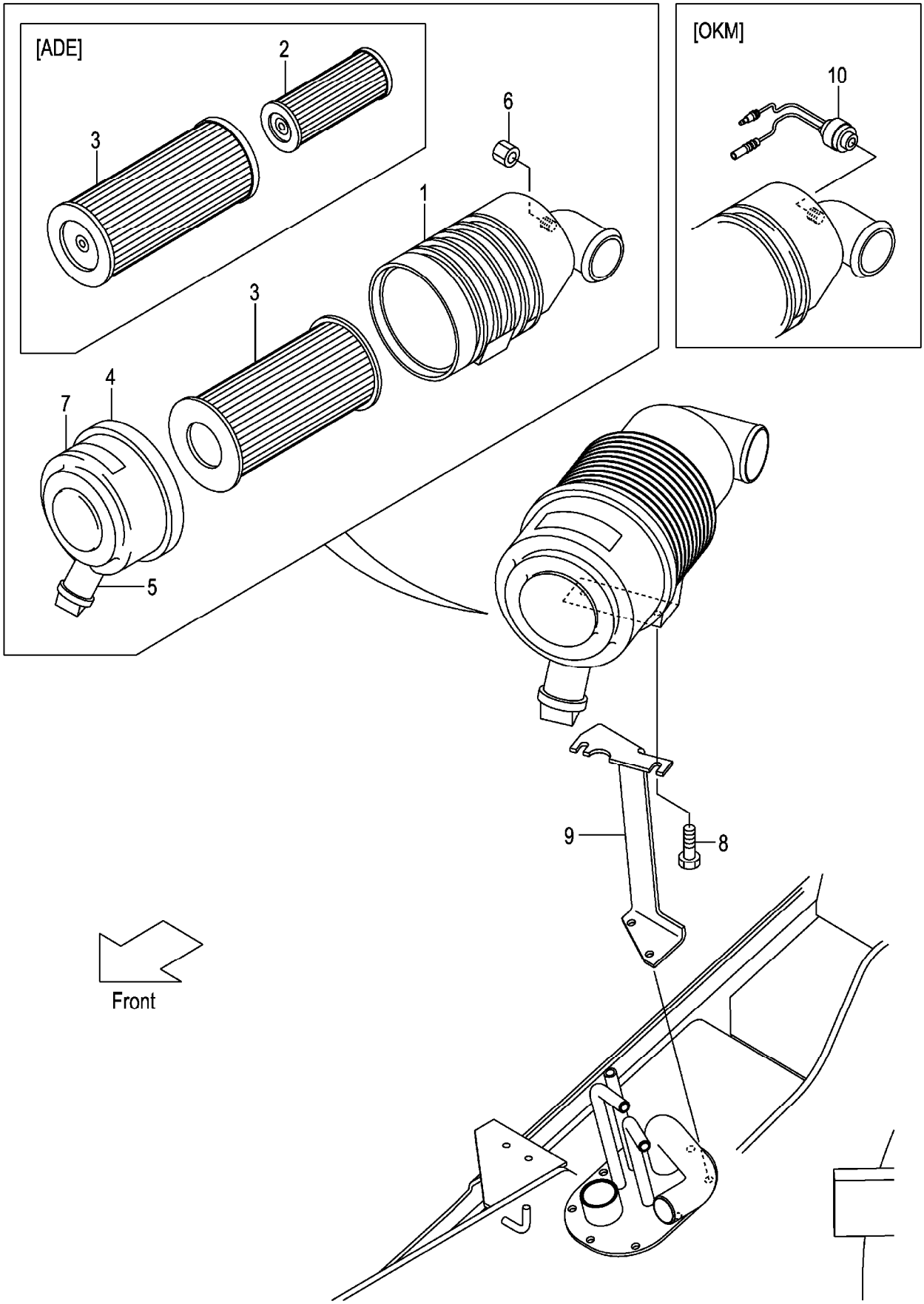

A:FD30C3 FD30T3 FD30W3

Item No	Part No.	Mark	Description		Req'd	Remarks : Serial No.
A1	234A1-00101		CLEANER-ASSY,AIR	ｴｱｰｸﾘｰﾅｱｯｾﾝ	1	INC.1,3-7
-	534A0-60011		CLEANER-ASSY,AIR	ｴｱｰｸﾘｰﾅｱｯｾﾝ	1	[ADE] INC.1-7
1	234A1-00111		BODY	ﾎﾞﾃﾞｨ	1	
2	534A0-62011		ELEMENT,INNER	ｴﾚﾒﾝﾄ	1	[ADE]
3	256G1-08011		ELEMENT,OUTER	ｴﾚﾒﾝﾄ	1	
-	534A0-62001		ELEMENT,OUTER	ｴﾚﾒﾝﾄ	1	[ADE]
4	256G1-08021		COVER	ｶﾊﾞｰ	1	
5	256A1-08031		VALVE,VACUATOR	ﾊﾞﾙﾌﾞ	1	
6	53651-12551		CAP,NIPPLE	ｷｬｯﾌﾟ	1	
7	234A1-00121		LABEL	ﾗﾍﾞﾙ	1	
-	516G0-62001		LABEL	ﾗﾍﾞﾙ	1	[ADE]
8	01183-08016		BOLT	ﾎﾞﾙﾄ	2	1-126
-	01185-08016		BOLT	ﾎﾞﾙﾄ	2	127-
9	22N51-02001		BRACKET,AIR-CLEANER	ﾌﾞﾗｹｯﾄ	1	
10	522A1-10201		SENSOR,762MM	ｾﾝｻ	1	[OKM]

FIG.5 AIR DUCT (GASOLINE)

(F7031050) エアーダクト

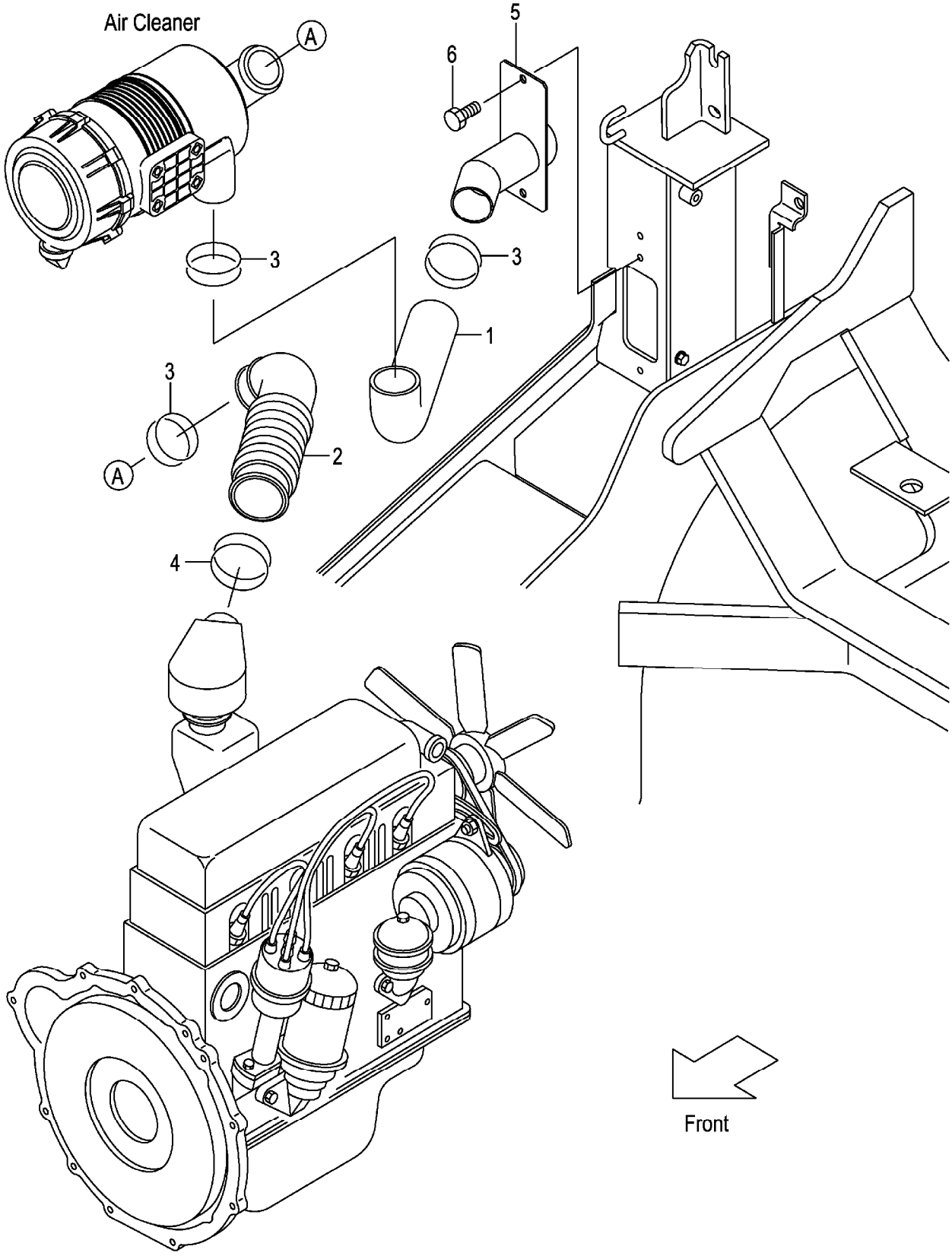

A:FG30C3 FG30T3 FG30W3

Item No	Part No.	Mark	Description		Req'd	Remarks : Serial No.
1	22B51-02201		HOSE,AIR-DUCT	ﾎｰｽ	1	
2	20A71-02101		HOSE,AIR-INTAKE	ﾎｰｽ	1	
3	04911-00060		CLIP	ｸﾘｯﾌﾟ	3	
4	04911-00075		CLIP	ｸﾘｯﾌﾟ	1	
5	22B51-02601		PIPE,DUCT	ﾊﾟｲﾌﾟ	1	
6	01185-08016		BOLT	ﾎﾞﾙﾄ	2	

FIG.6 AIR DUCT (DIESEL)

(F7031060) エアーダクト

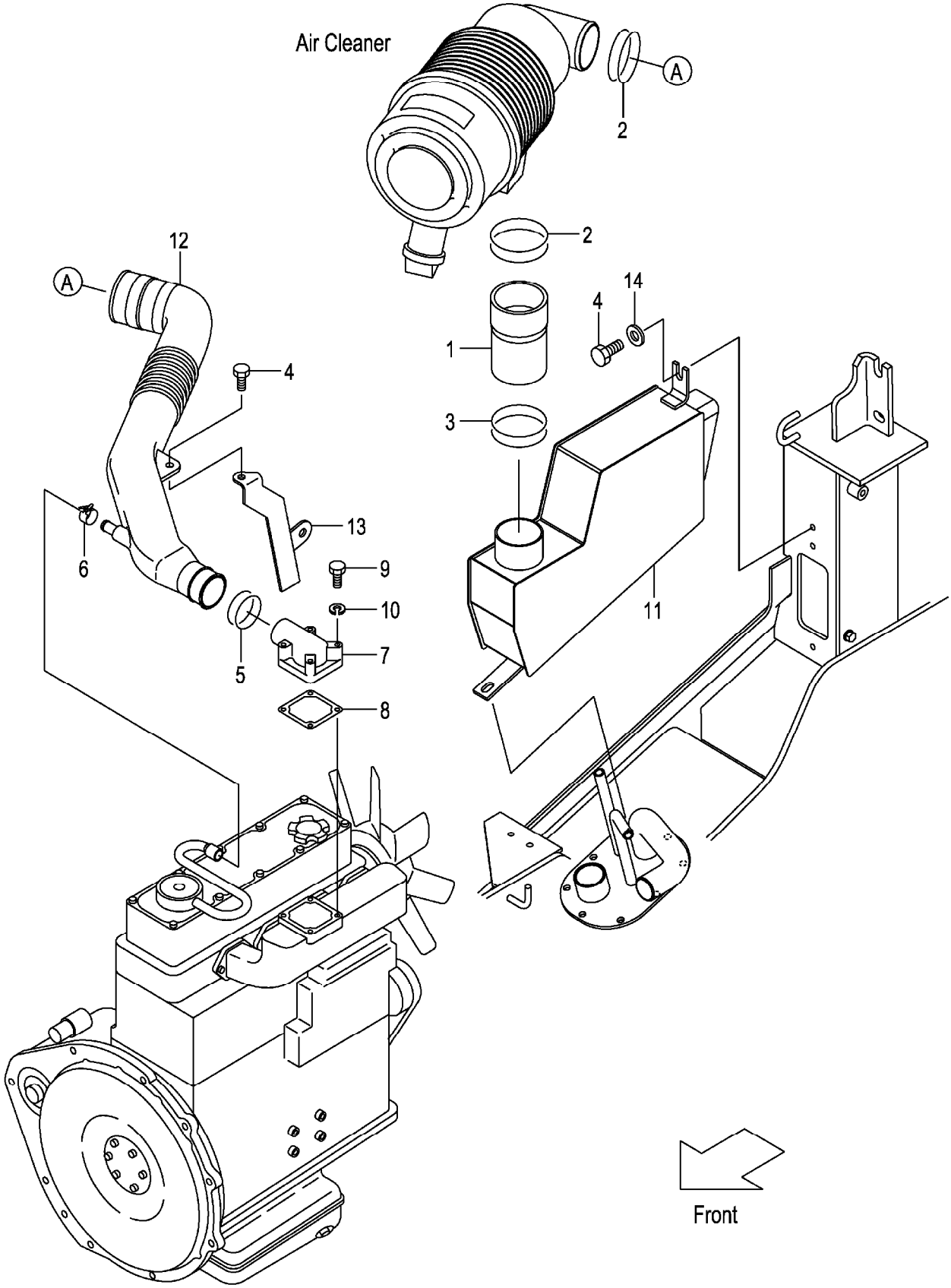

FIG.6

(F7031060)

A:FD30C3 FD30T3 FD30W3

Item No	Part No.	Mark	Description		Req'd	Remarks : Serial No.
1	22N51-02201		DUCT,AIR	ﾀﾞｸﾄ	1	
2	04911-00073		CLIP	ｸﾘｯﾌﾟ	2	
3	04911-00070		CLIP	ｸﾘｯﾌﾟ	1	
4	01185-08016		BOLT	ﾎﾞﾙﾄ	2	
5	04911-00060		CLIP	ｸﾘｯﾌﾟ	1	
6	23652-22121		CLIP	ｸﾘｯﾌﾟ	1	
7	242F1-02111		INTAKE,AIR	ｲﾝﾃｰｸ	1	
8	242F1-02121		GASKET	ｶﾞｽｹｯﾄ	1	
9	01100-08065		BOLT	ﾎﾞﾙﾄ	4	
10	02010-00008		WASHER	ﾜｯｼｬ	4	
11	22N51-00601		RESONATOR	ﾚｿﾞﾈｰﾀ	1	
12	22N51-00301		HOSE,AIR-DUCT	ﾎｰｽ	1	
13	22N51-02251		BRACKET,INTAKE-DUCT	ﾌﾞﾗｹｯﾄ	1	
14	02000-00008		WASHER	ﾜｯｼｬ	1	

FIG.7 AIR DUCT (GASOLINE):[CAKB]

(F7031070) エアーダクト

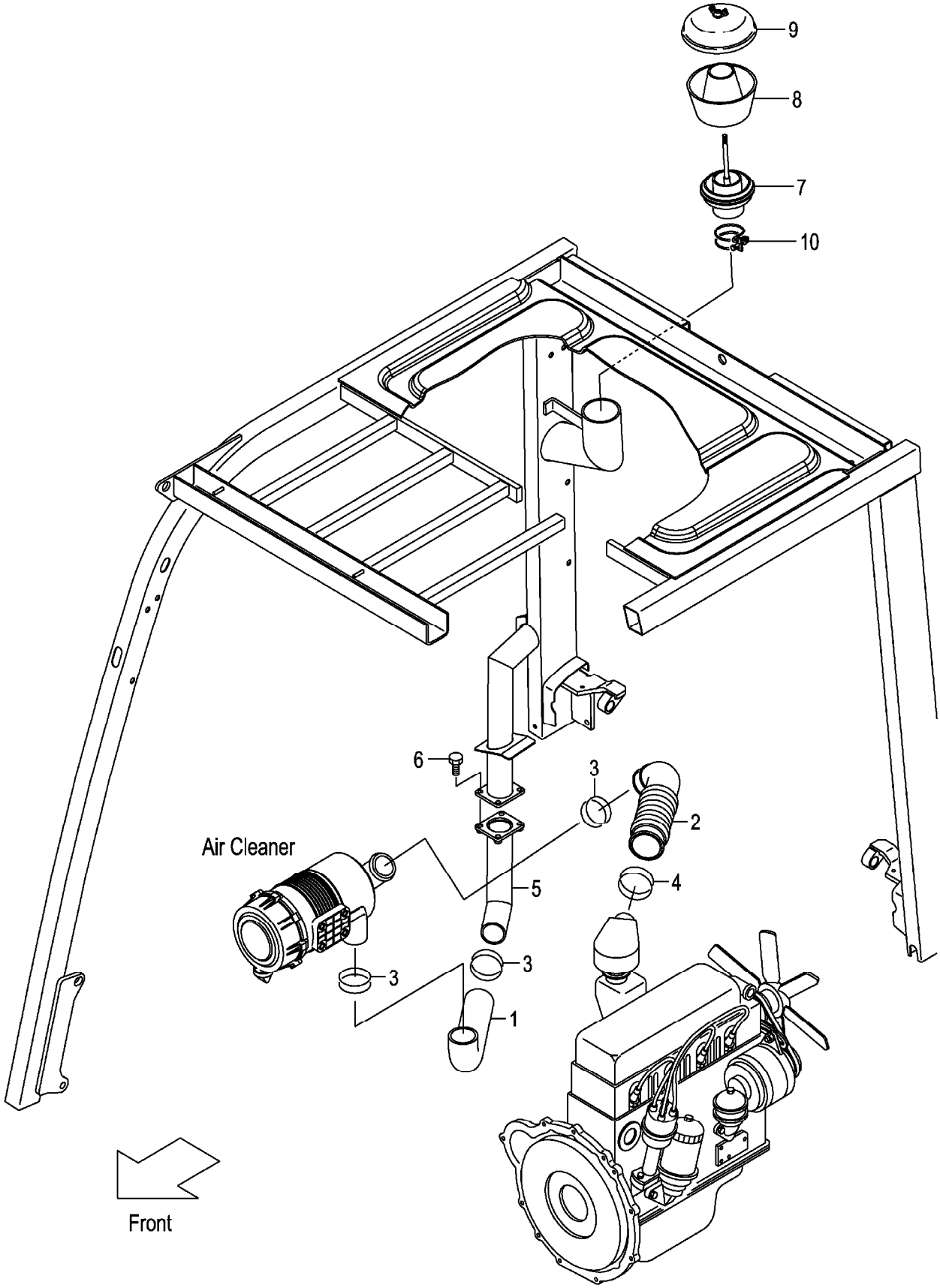

A:FG30C3 FG30T3 FG30W3

Item No	Part No.	Mark	Description		Req'd	Remarks : Serial No.
1	52B50-92251		HOSE,AIR-DUCT	ﾎｰｽ	1	[CAKB]
2	20A71-02101		HOSE,AIR-INTAKE	ﾎｰｽ	1	[CAKB]
3	04911-00060		CLIP	ｸﾘｯﾌﾟ	3	[CAKB]
4	04911-00075		CLIP	ｸﾘｯﾌﾟ	1	[CAKB]
5	52B50-92201		PIPE,INTAKE	ﾊﾟｲﾌﾟ	1	[CAKB]
6	01183-08020		BOLT	ﾎﾞﾙﾄ	4	[CAKB]
A1	522B0-92021		CLEANER-ASSY,PRE	ﾌﾟﾚｸﾘｰﾅｱｯｾﾝ	1	[CAKB] INC.7-9
7	522B0-92031		SLEEVE	ｽﾘｰﾌﾞ	1	[CAKB]
8	522B0-92041		BODY	ﾎﾞﾃﾞｨ	1	[CAKB]
9	522B0-92051		COVER	ｶﾊﾞｰ	1	[CAKB]
10	04911-00090		CLIP	ｸﾘｯﾌﾟ	1	[CAKB]

FIG.8 AIR DUCT (DIESEL):[CAKB]

(F7031080) エアーダクト

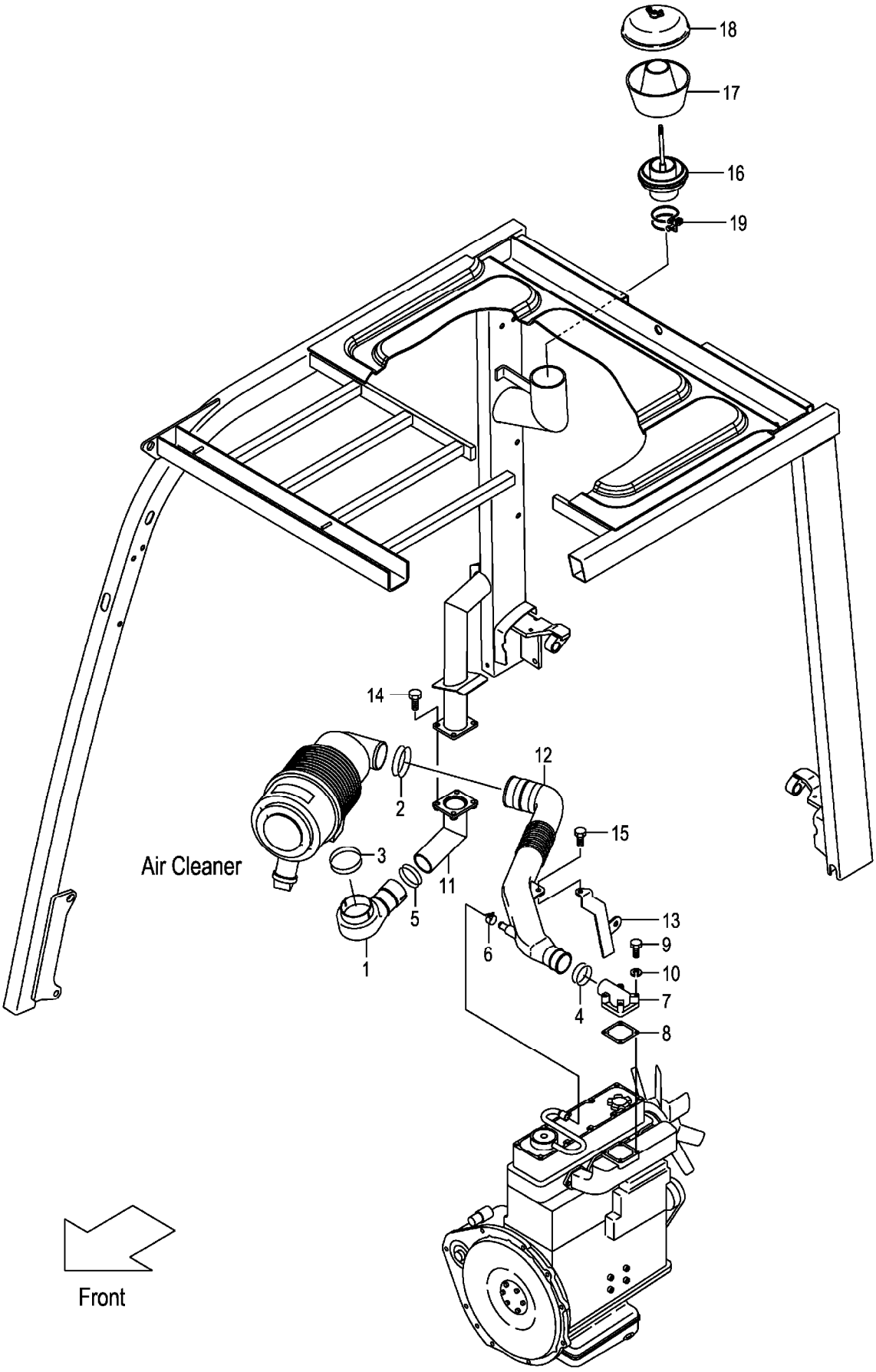

FIG.8

(F7031080)

A:FD30C3 FD30T3 FD30W3

Item No	Part No.	Mark	Description		Req'd	Remarks : Serial No.
1	234A1-02001		INTAKE,AIR	ｲﾝﾃｰｸ	1	[CAKB]
2	04911-00073		CLIP	ｸﾘｯﾌﾟ	1	[CAKB]
3	04911-00070		CLIP	ｸﾘｯﾌﾟ	1	[CAKB]
4	04911-00060		CLIP	ｸﾘｯﾌﾟ	1	[CAKB]
5	04911-00055		CLIP	ｸﾘｯﾌﾟ	1	[CAKB]
6	23652-22121		CLIP	ｸﾘｯﾌﾟ	1	[CAKB]
7	242F1-02111		INTAKE,AIR	ｲﾝﾃｰｸ	1	[CAKB]
8	242F1-02121		GASKET	ｶﾞｽｹｯﾄ	1	[CAKB]
9	01100-08065		BOLT	ﾎﾞﾙﾄ	4	[CAKB]
10	02010-00008		WASHER	ﾜｯｼｬ	4	[CAKB]
11	52N50-92202		PIPE,INTAKE	ﾊﾟｲﾌﾟ	1	[CAKB]
12	22N51-00301		HOSE,AIR-DUCT	ﾎｰｽ	1	[CAKB]
13	22N51-02251		BRACKET,INTAKE-DUCT	ﾌﾞﾗｹｯﾄ	1	[CAKB]
14	01183-08020		BOLT	ﾎﾞﾙﾄ	4	[CAKB]
15	01185-08016		BOLT	ﾎﾞﾙﾄ	1	[CAKB]
A1	522B0-92021		CLEANER-ASSY,PRE	ﾌﾟﾚｸﾘｰﾅｱｯｾﾝ	1	[CAKB] INC.16-18
16	522B0-92031		SLEEVE	ｽﾘｰﾌﾞ	1	[CAKB]
17	522B0-92041		BODY	ﾎﾞﾃﾞｨ	1	[CAKB]
18	522B0-92051		COVER	ｶﾊﾞｰ	1	[CAKB]
19	04911-00090		CLIP	ｸﾘｯﾌﾟ	1	[CAKB]

FIG.9 COOLING UNIT (CLUTCH)(OIL CLUTCH)

(F7032110) クーリング゛ユニット

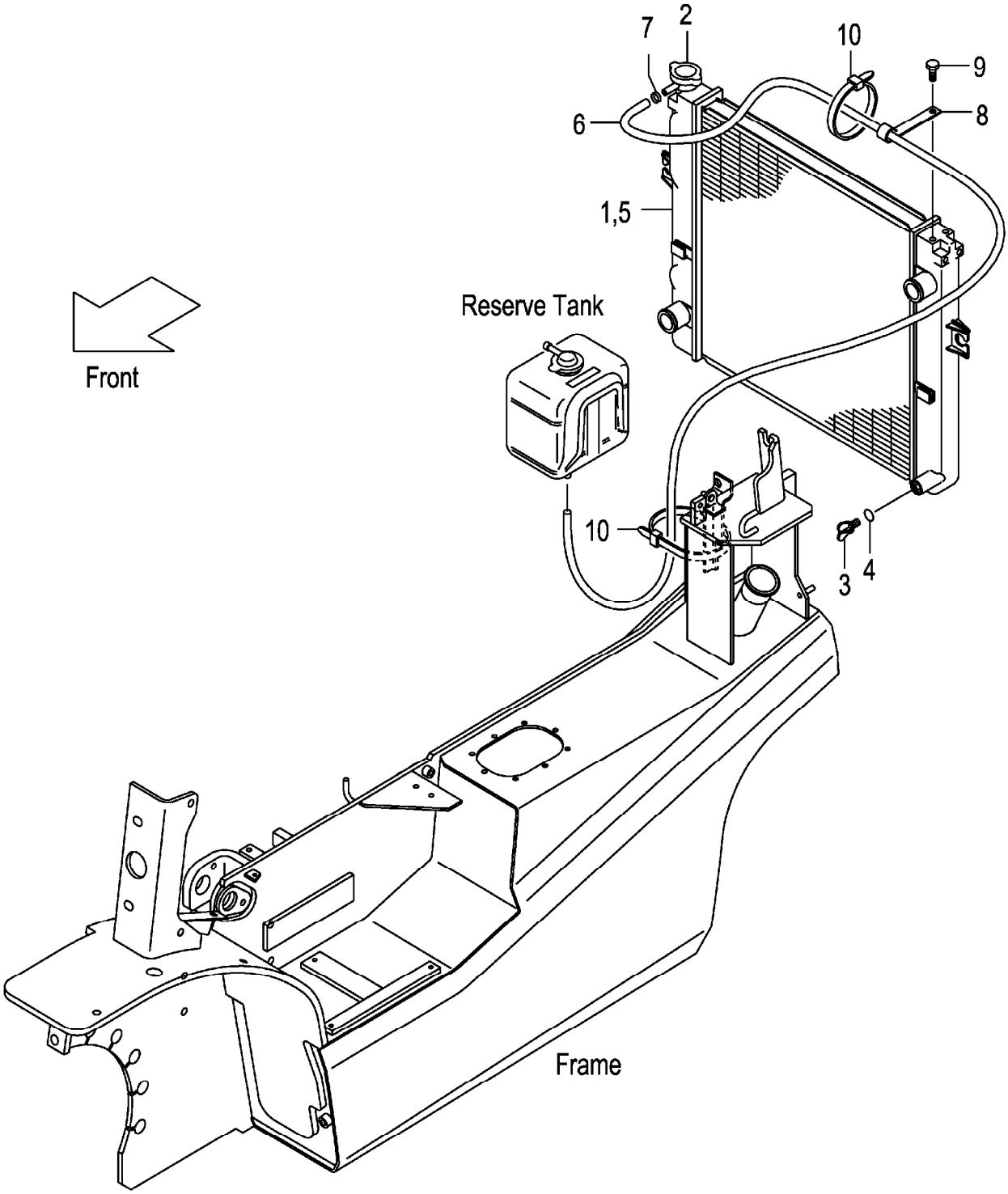

A:FG30C3 C:FD30C3
B:FG30W3 D:FD30W3

Item No	Part No.	Mark	Description		Req'd	Remarks : Serial No.
A1	237A2-10102		RADIATOR-ASSY	ﾗｼﾞｴｰﾀｱｯｾﾝ	1	A,C INC.1-7
-	237H2-10102		RADIATOR-ASSY	ﾗｼﾞｴｰﾀｱｯｾﾝ	1	B,D INC.1-7
-	537A6-60302		RADIATOR-ASSY	ﾗｼﾞｴｰﾀｱｯｾﾝ	1	[RADPF][HCS] INC.1-7
-	537A6-60302		RADIATOR-ASSY	ﾗｼﾞｴｰﾀｱｯｾﾝ	1	A,C [EXK] INC.1-7
1	NO PART NO.	#	RADIATOR	ﾗｼﾞｴｰﾀ	1	A,C
-	NO PART NO.	#	RADIATOR	ﾗｼﾞｴｰﾀ	1	B,D
-	NO PART NO.	#	RADIATOR	ﾗｼﾞｴｰﾀ	1	[RADPF][HCS]
-	NO PART NO.	#	RADIATOR	ﾗｼﾞｴｰﾀ	1	A,C [EXK]
2	222A2-10211		CAP	ｷｬｯﾌﾟ	1	
3	234A2-12201		COCK	ｺｯｸ	1	
4	234A2-12211		O-RING	Oﾘﾝｸﾞ	1	
5	NO PART NO.	#	NUT	ﾅｯﾄ	3	A,C
-	NO PART NO.	#	NUT	ﾅｯﾄ	4	B,D
-	NO PART NO.	#	NUT	ﾅｯﾄ	4	[RADPF][HCS]
-	NO PART NO.	#	NUT	ﾅｯﾄ	4	A,C [EXK]
6	NO PART NO.		HOSE	ﾎｰｽ	1	
7	23772-12071		CLIP	ｸﾘｯﾌﾟ	1	
8	214A2-42331		CLIP	ｸﾘｯﾌﾟ	1	
9	01185-08016		BOLT	ﾎﾞﾙﾄ	1	
10	29590-64501		BAND	ﾊﾞﾝﾄﾞ	2	A,B:111- C,D:127-

FIG.10 COOLING UNIT (TOR-CON)

(F7032120) クーリング゛ユニット

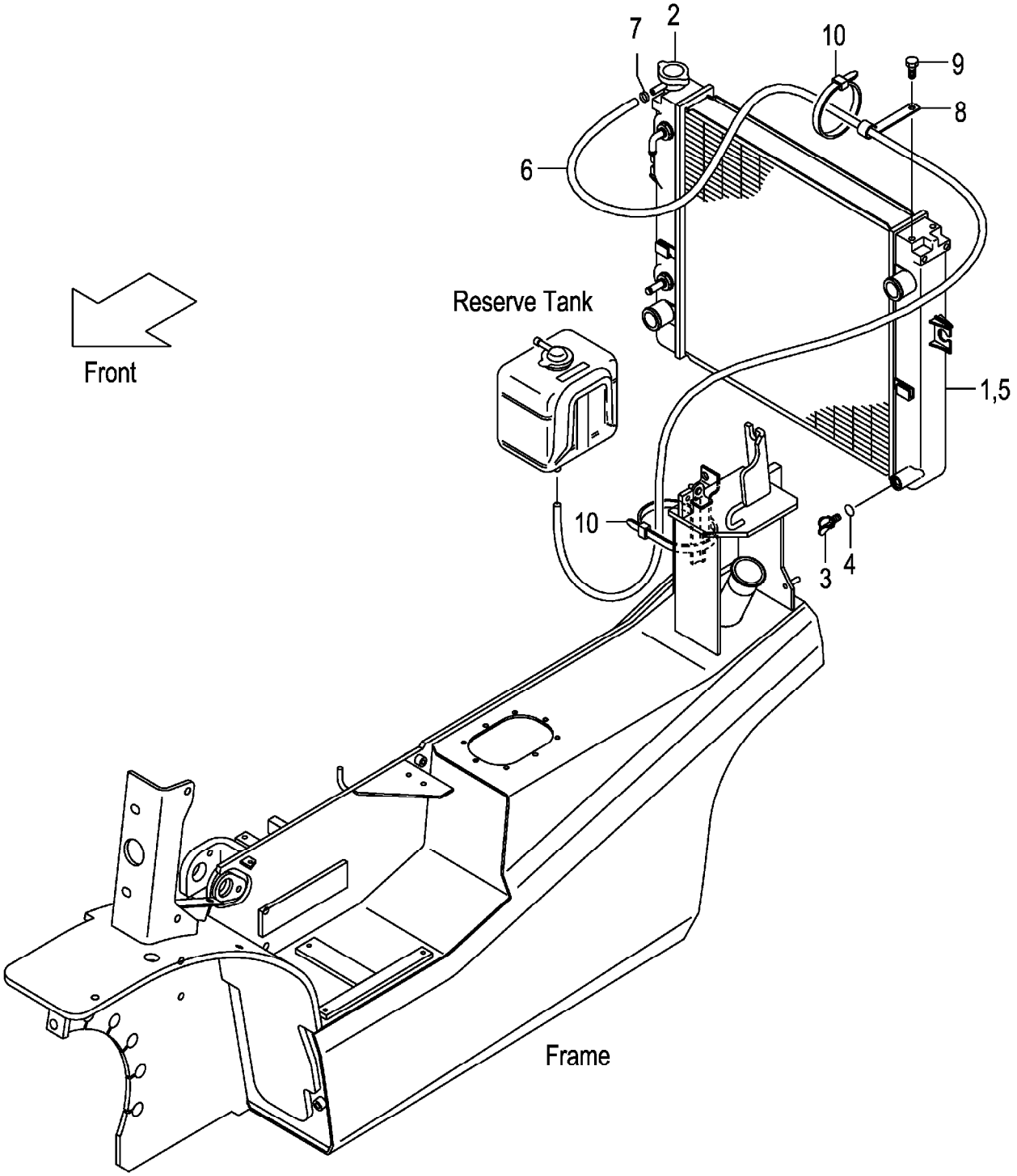

FIG.10

A:FG30T3
B:FD30T3

(F7032120)

Item No	Part No.	Mark	Description		Req'd	Remarks : Serial No.
A1	236L2-10102		RADIATOR-ASSY	ﾗｼﾞｴｰﾀｱｯｾﾝ	1	INC.1-7
-	536B6-60302		RADIATOR-ASSY	ﾗｼﾞｴｰﾀｱｯｾﾝ	1	[RADPF][HCS][EXK] INC.1-7
1	NO PART NO.	#	RADIATOR	ﾗｼﾞｴｰﾀ	1	
-	NO PART NO.	#	RADIATOR	ﾗｼﾞｴｰﾀ	1	[RADPF][HCS][EXK]
2	222A2-10211		CAP	ｷｬｯﾌﾟ	1	
3	234A2-12201		COCK	ｺｯｸ	1	
4	234A2-12211		O-RING	Oﾘﾝｸﾞ	1	
5	NO PART NO.	#	NUT	ﾅｯﾄ	4	
6	NO PART NO.		HOSE	ﾎｰｽ	1	
7	23772-12071		CLIP	ｸﾘｯﾌﾟ	1	
8	214A2-42331		CLIP	ｸﾘｯﾌﾟ	1	
9	01185-08016		BOLT	ﾎﾞﾙﾄ	1	
10	29590-64501		BAND	ﾊﾞﾝﾄﾞ	2	A:111- B:127-

FIG.11 FAN SHROUD (GASOLINE)

(F7032130) ﾌｧﾝｼｭﾗｳﾄﾞ

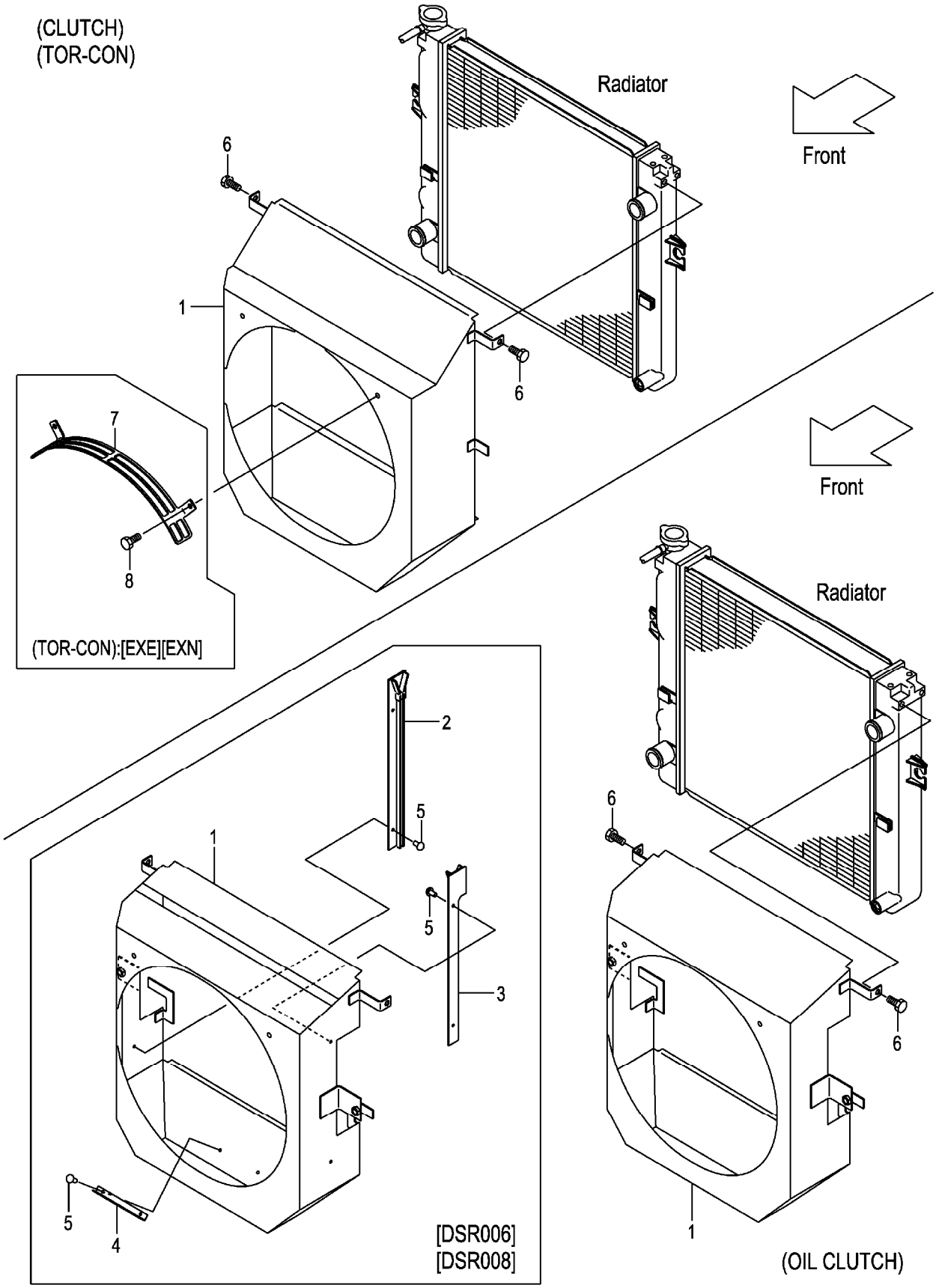

A:FG30C3
B:FG30T3
C:FG30W3

FIG.11
(F7032130)

Item No	Part No.	Mark	Description		Req'd	Remarks : Serial No.
1	22B52-12201		SHROUD,FAN	ｼｭﾗｳﾄﾞ	1	A,B
-	22C42-12201		SHROUD,FAN	ｼｭﾗｳﾄﾞ	1	C
-	52B56-52001		SHROUD,FAN	ｼｭﾗｳﾄﾞ	1	A,B [DSR006][DSR008]
-	52C46-52101		SHROUD,FAN	ｼｭﾗｳﾄﾞ	1	C [DSR006][DSR008]
-	52B57-62201		SHROUD,FAN	ｼｭﾗｳﾄﾞ	1	A,B [SCBCR]
2	539H6-52251		GUIDE,RH	ｶﾞｲﾄﾞ	1	C [DSR006][DSR008]
3	539H6-52351		GUIDE,LH	ｶﾞｲﾄﾞ	1	C [DSR006][DSR008]
4	532N6-52011		GUIDE,LOWER	ｶﾞｲﾄﾞ	1	C [DSR006][DSR008]
5	22256-42001		RIVET	ﾘﾍﾞｯﾄ	6	C [DSR006][DSR008]
6	01185-08016		BOLT	ﾎﾞﾙﾄ	2	
7	52N53-83201		GUARD,FAN	ｶﾞｰﾄﾞ	1	B [EXE][EXN]
8	01185-08020		BOLT	ﾎﾞﾙﾄ	2	B [EXE][EXN]

FIG.12 FAN SHROUD (DIESEL)

(F7032140) ﾌｧﾝｼｭﾗｳﾄﾞ

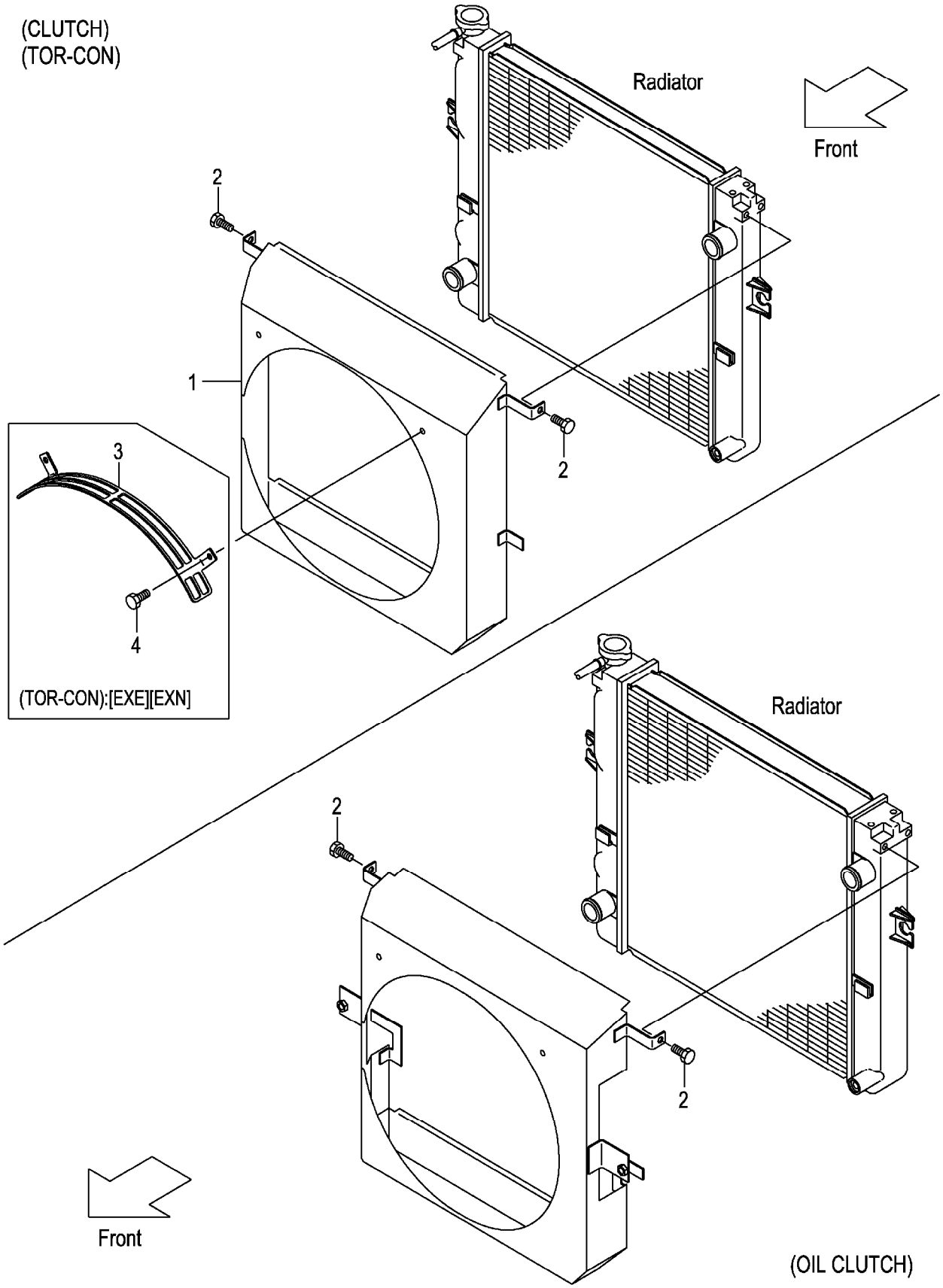

A:FD30C3
B:FD30T3
C:FD30W3

FIG.12
(F7032140)

Item No	Part No.	Mark	Description		Req'd	Remarks : Serial No.
1	22N52-12201		SHROUD,FAN	ｼｭﾗｳﾄﾞ	1	A,B
-	22P42-12201		SHROUD,FAN	ｼｭﾗｳﾄﾞ	1	C
-	52N56-52001		SHROUD,FAN	ｼｭﾗｳﾄﾞ	1	A,B [DSR006][DSR008]
-	52N57-62201		SHROUD,FAN	ｼｭﾗｳﾄﾞ	1	A,B [SCBCR]
2	01185-08016		BOLT	ﾎﾞﾙﾄ	2	
3	52N53-83201		GUARD,FAN	ｶﾞｰﾄﾞ	1	B [EXE][EXN]
4	01185-08020		BOLT	ﾎﾞﾙﾄ	2	B [EXE][EXN]

FIG.13 RADIATOR PARTS & RESERVE TANK

(F7032150) ﾗｼﾞｴｰﾀﾊﾟｰﾂ&ﾘｻﾞｰﾌﾞﾀﾝｸ

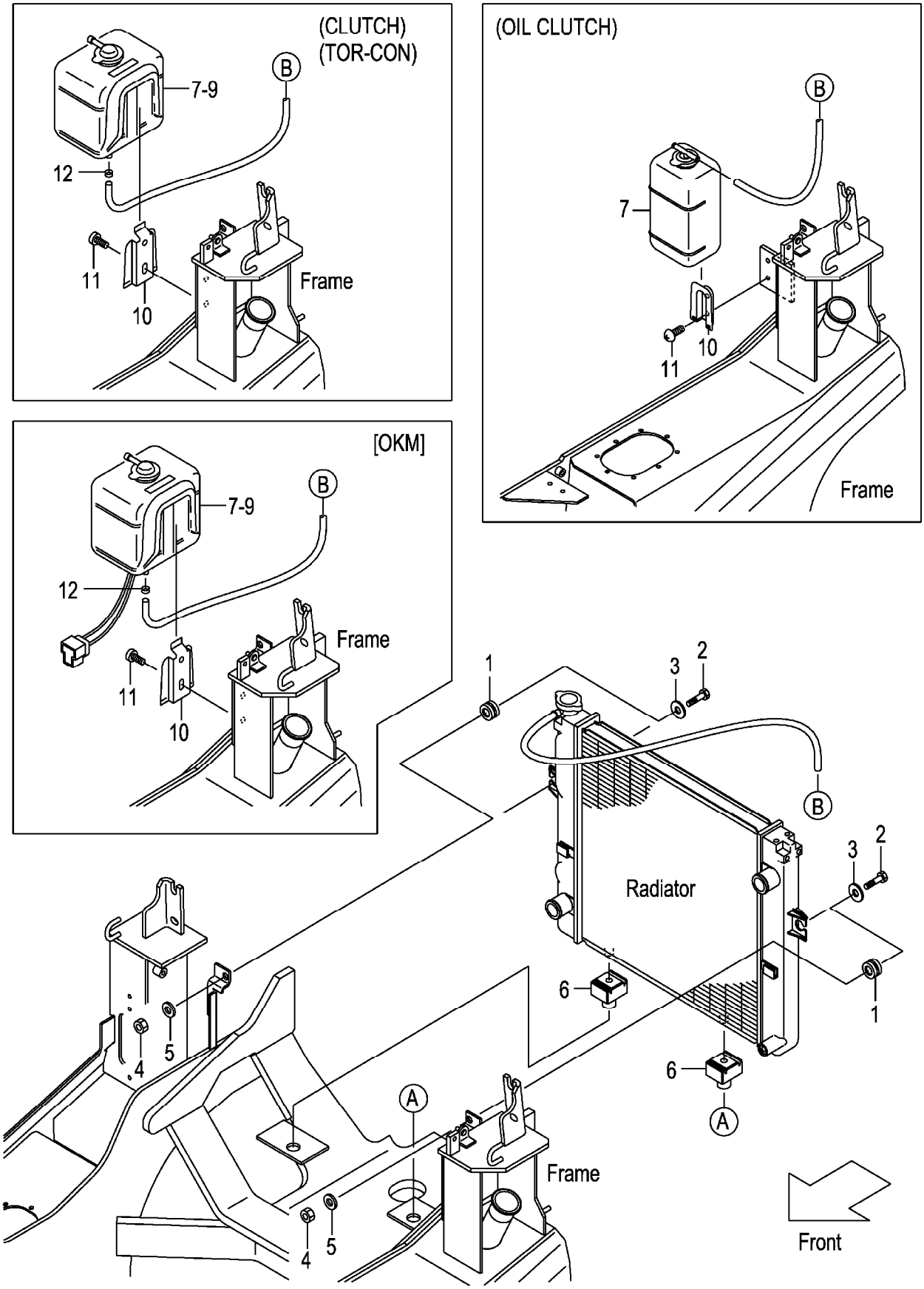

A:FG30C3 FG30T3 C:FD30C3 FD30T3
B:FG30W3 D:FD30W3

Item No	Part No.	Mark	Description		Req'd	Remarks : Serial No.
1	214A2-12001		RUBBER	ﾗﾊﾞｰ	2	
2	214A2-12021		BOLT	ﾎﾞﾙﾄ	2	
3	22252-32251		WASHER	ﾜｯｼｬ	2	
4	23652-12051		NUT	ﾅｯﾄ	2	
5	02000-00010		WASHER	ﾜｯｼｬ	2	
6	239A2-12021		RUBBER	ﾗﾊﾞｰ	2	
7	214A2-12111		TANK,RESERVE	ﾀﾝｸ	1	A,C
						INC.8,9
-	256A2-12031		TANK,RESERVE	ﾀﾝｸ	1	B,D
-	214A2-12121		TANK,RESERVE	ﾀﾝｸ	1	[OKM] INC.8,9
8	214A2-13001		CAP	ｷｬｯﾌﾟ	1	A,C
-	214A2-13001		CAP	ｷｬｯﾌﾟ	1	[OKM]
9	214A2-13011		PACKING	ﾊﾟｯｷﾝｸﾞ	1	A,C
-	214A2-13011		PACKING	ﾊﾟｯｷﾝｸﾞ	1	[OKM]
10	214A2-12141		BRACKET	ﾌﾞﾗｹｯﾄ	1	A,C
-	256A2-12041		BRACKET	ﾌﾞﾗｹｯﾄ	1	B,D
-	214A2-12141		BRACKET	ﾌﾞﾗｹｯﾄ	1	[OKM]
11	214A2-42611		SCREW	ｽｸﾘｭ	2	
12	214A2-12201		CLIP	ｸﾘｯﾌﾟ	1	A,C
-	214A2-12201		CLIP	ｸﾘｯﾌﾟ	1	[OKM]

FIG.14 RADIATOR HOSE (GASOLINE)

(F7032160) ﾗｼﾞｴｰﾀﾎｰｽ

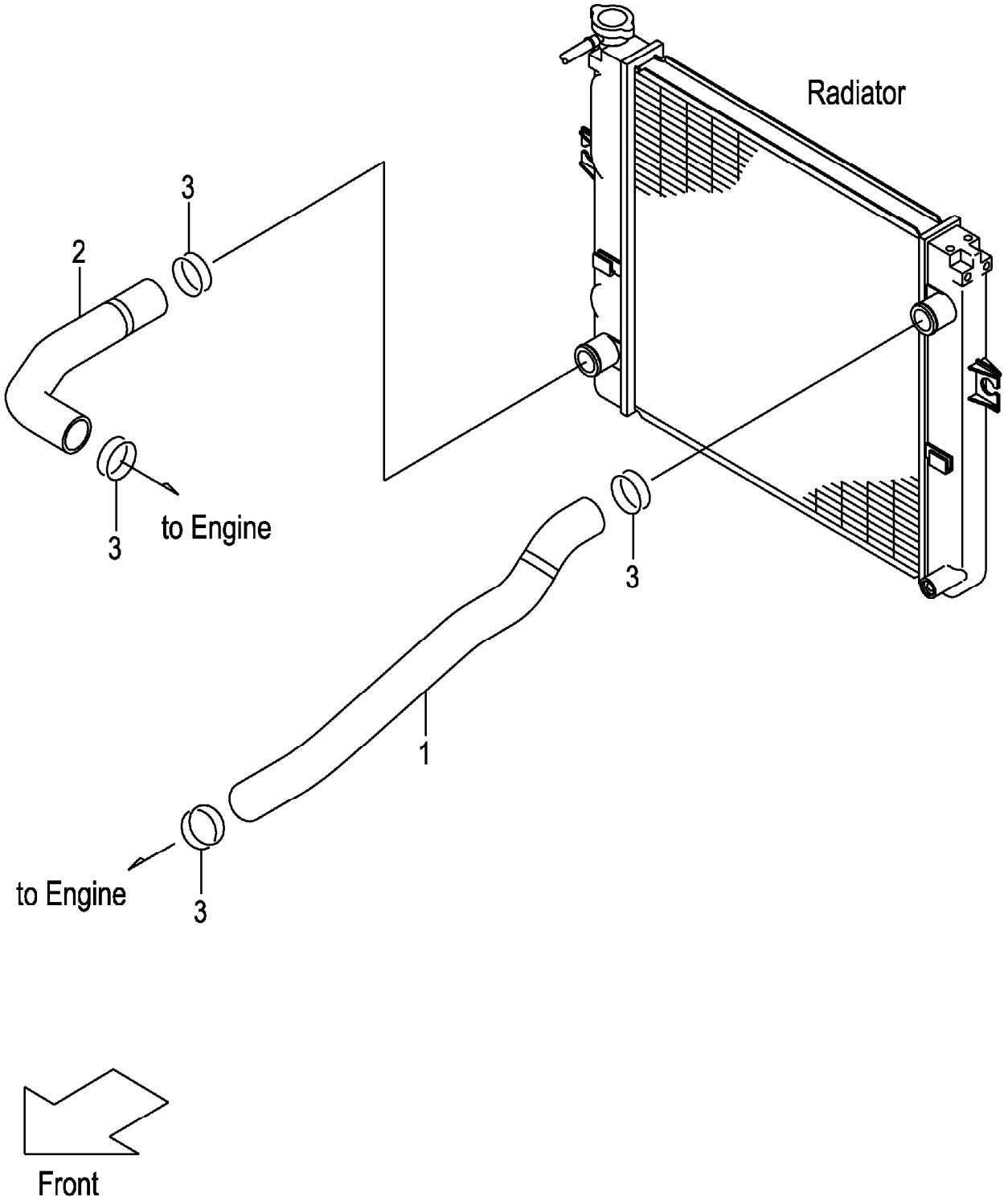

FIG.14

(F7032160)

A:FG30C3 FG30T3 FG30W3

Item No	Part No.	Mark	Description	Req'd	Remarks : Serial No.
1	22B52-12001		HOSE,UPPER ﾎｰｽ	1	
2	22B52-12011		HOSE,LOWER ﾎｰｽ	1	
3	04911-00044		CLIP ｸﾘｯﾌﾟ	4	

FIG.15 RADIATOR HOSE (DIESEL)

(F7032170) ﾗｼﾞｴｰﾀﾎｰｽ

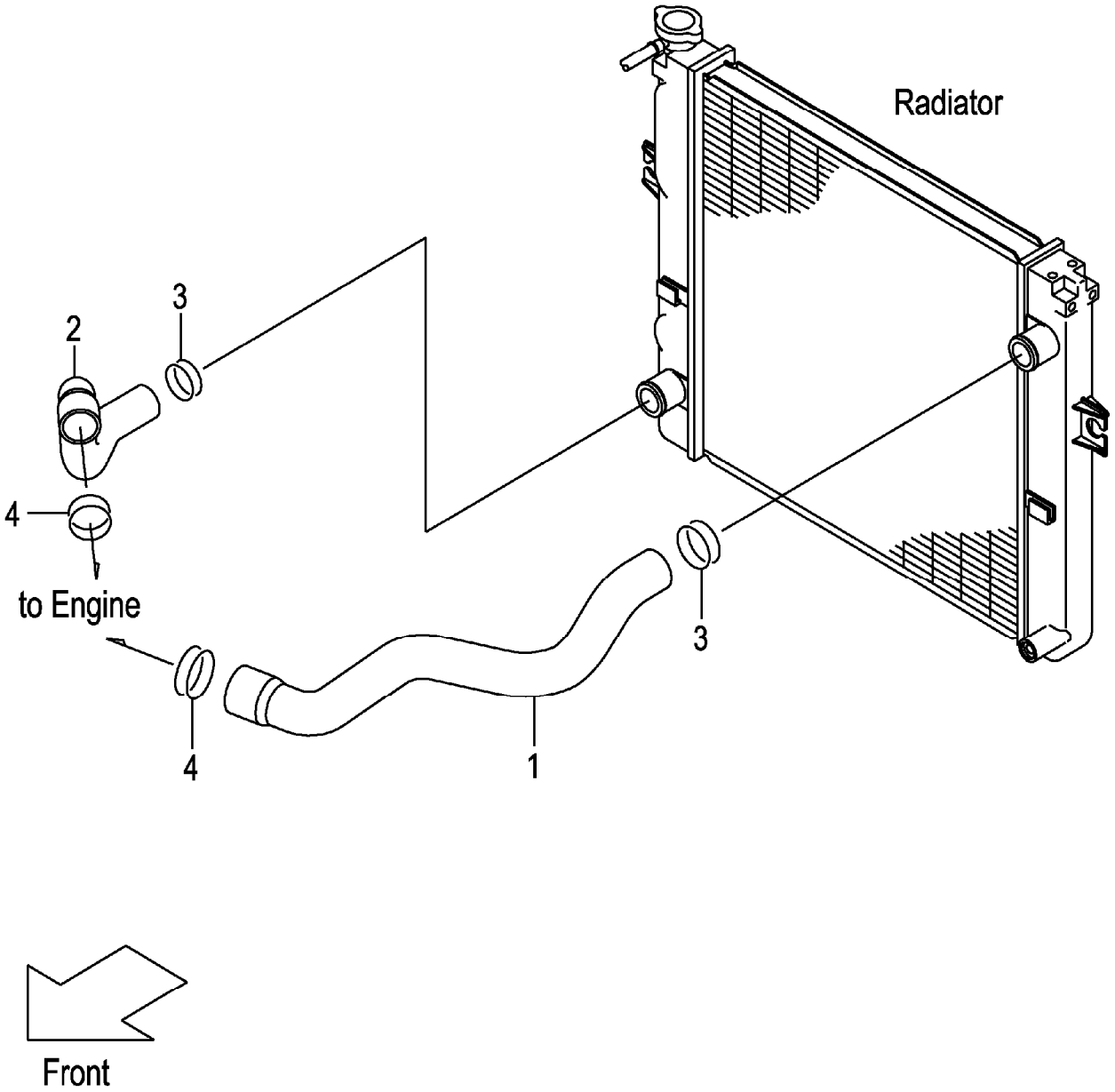

FIG.15

(F7032170)

A:FD30C3 FD30T3 FD30W3

Item No	Part No.	Mark	Description	Req'd	Remarks : Serial No.
1	22N52-12001		HOSE,UPPER ﾎｰｽ	1	
2	242F2-12051		HOSE,LOWER ﾎｰｽ	1	
3	04911-00044		CLIP ｸﾘｯﾌﾟ	2	
4	04911-00050		CLIP ｸﾘｯﾌﾟ	2	

FIG.16 DUST SCREEN [DSR006][DSR008]

(F7032180) ﾀﾞｽﾄｽｸﾘｰﾝ

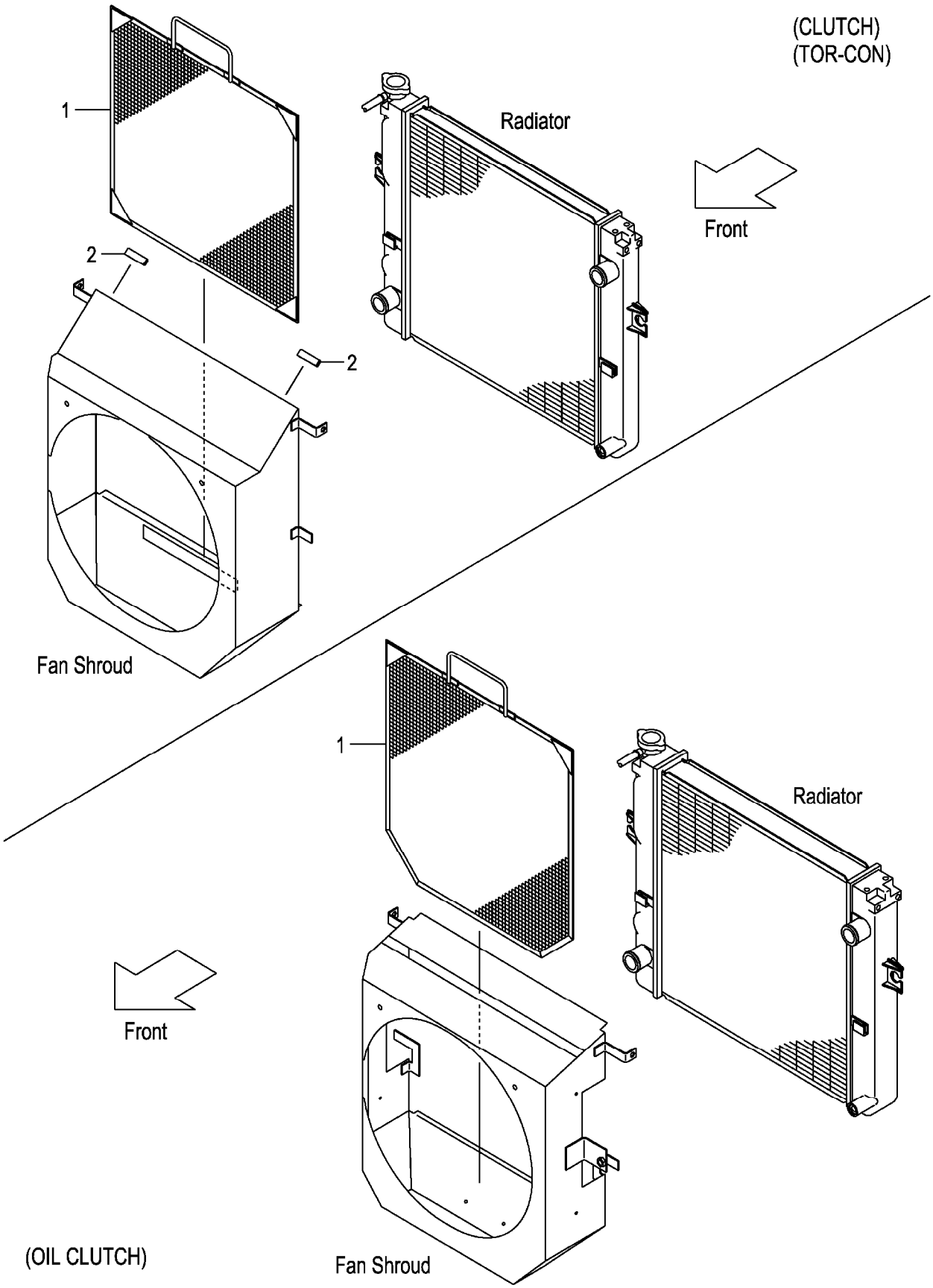

A:FG30C3 FG30T3
B:FG30W3
C:FD30C3 FD30T3

FIG.16
(F7032180)

Item No	Part No.	Mark	Description		Req'd	Remarks : Serial No.
1	539A6-52051		SCREEN,DUST	ｽｸﾘｰﾝ	1	A,C [DSR006]
-	539H6-52051		SCREEN,DUST	ｽｸﾘｰﾝ	1	B [DSR006]
-	539A6-52151		SCREEN,DUST	ｽｸﾘｰﾝ	1	A,C [DSR008]
-	539H6-52151		SCREEN,DUST	ｽｸﾘｰﾝ	1	B [DSR008]
2	209P6-42831		EDGING	ｴｯｼﾞﾝｸﾞ	2	A,C [DSR006][DSR008]

FIG.17 FUEL SYSTEM (GASOLINE)

(F7032210) フューエルシステム

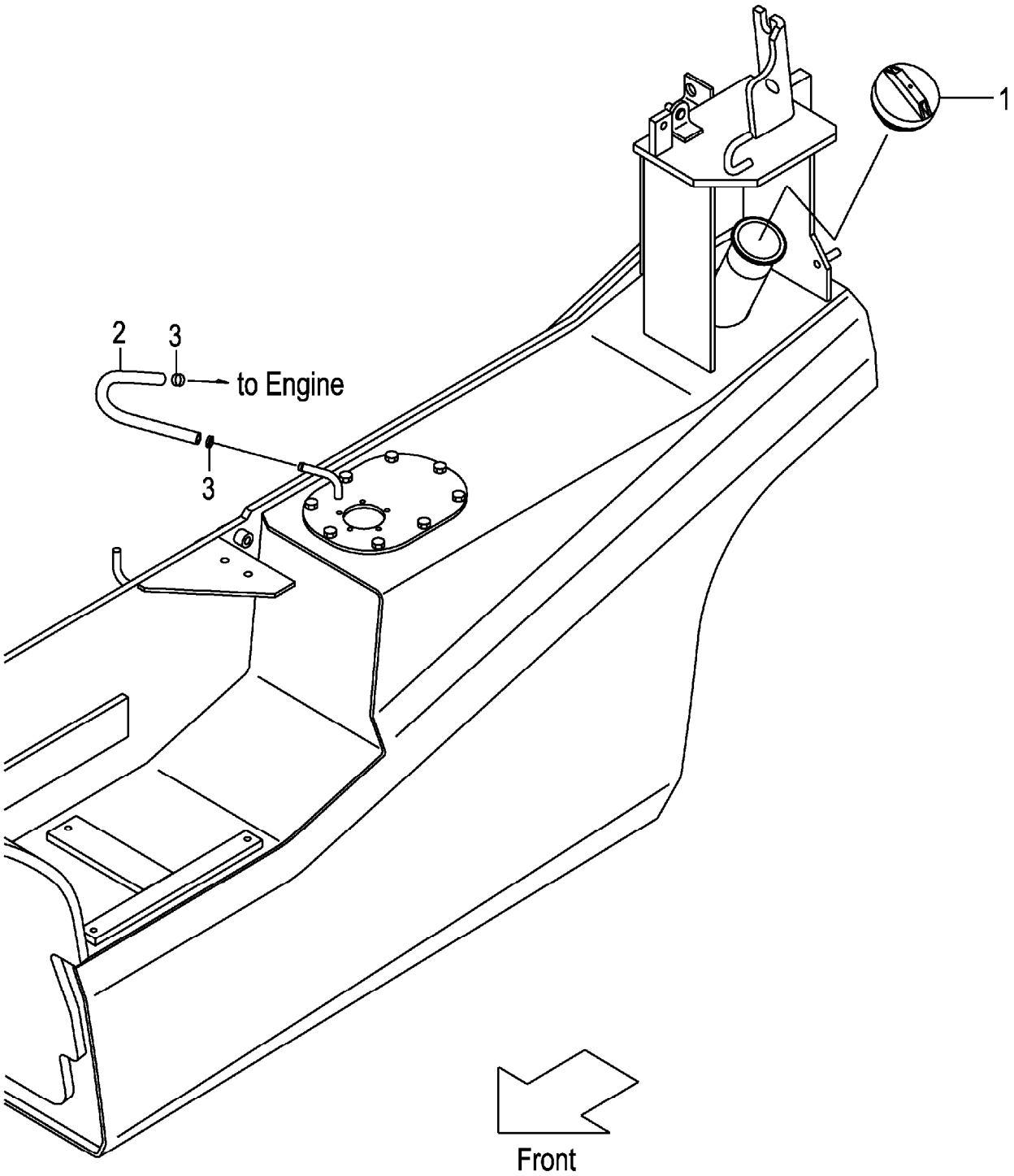

FIG.17

(F7032210)

A:FG30C3 FG30T3 FG30W3

Item No	Part No.	Mark	Description	Req'd	Remarks : Serial No.
1	216G2-22051		CAP,FUEL キャップ	1	
2	21152-22151		HOSE,FUEL ホース	1	
3	22192-22091		CLIP クリップ	2	

FIG.18 FUEL SYSTEM (DIESEL)

(F7032220) フューエルシステム

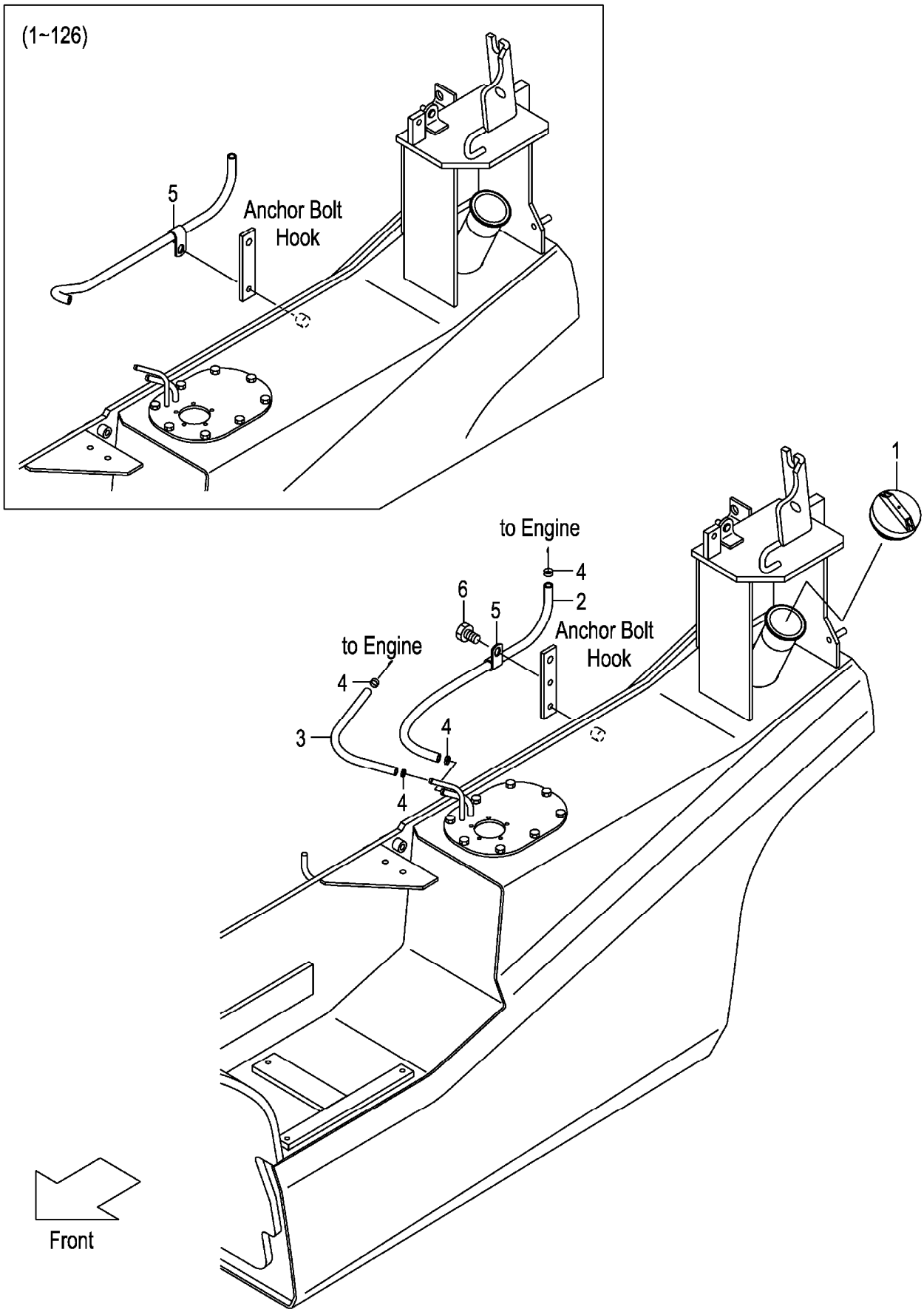

FIG.18

(F7032220)

A:FD30C3 FD30T3 FD30W3

Item No	Part No.	Mark	Description		Req'd	Remarks : Serial No.
1	216G2-22051		CAP,FUEL	ｷｬｯﾌﾟ	1	
2	251A2-22001		HOSE,FUEL	ﾎｰｽ	1	
3	25492-22001		HOSE,FUEL	ﾎｰｽ	1	
4	22192-22091		CLIP	ｸﾘｯﾌﾟ	4	
5	26602-42081		CLIP	ｸﾘｯﾌﾟ	1	
6	01185-08016		BOLT	ﾎﾞﾙﾄ	1	127-

FIG.19 EXHAUST SYSTEM

(F7032310) エキゾーストシステム

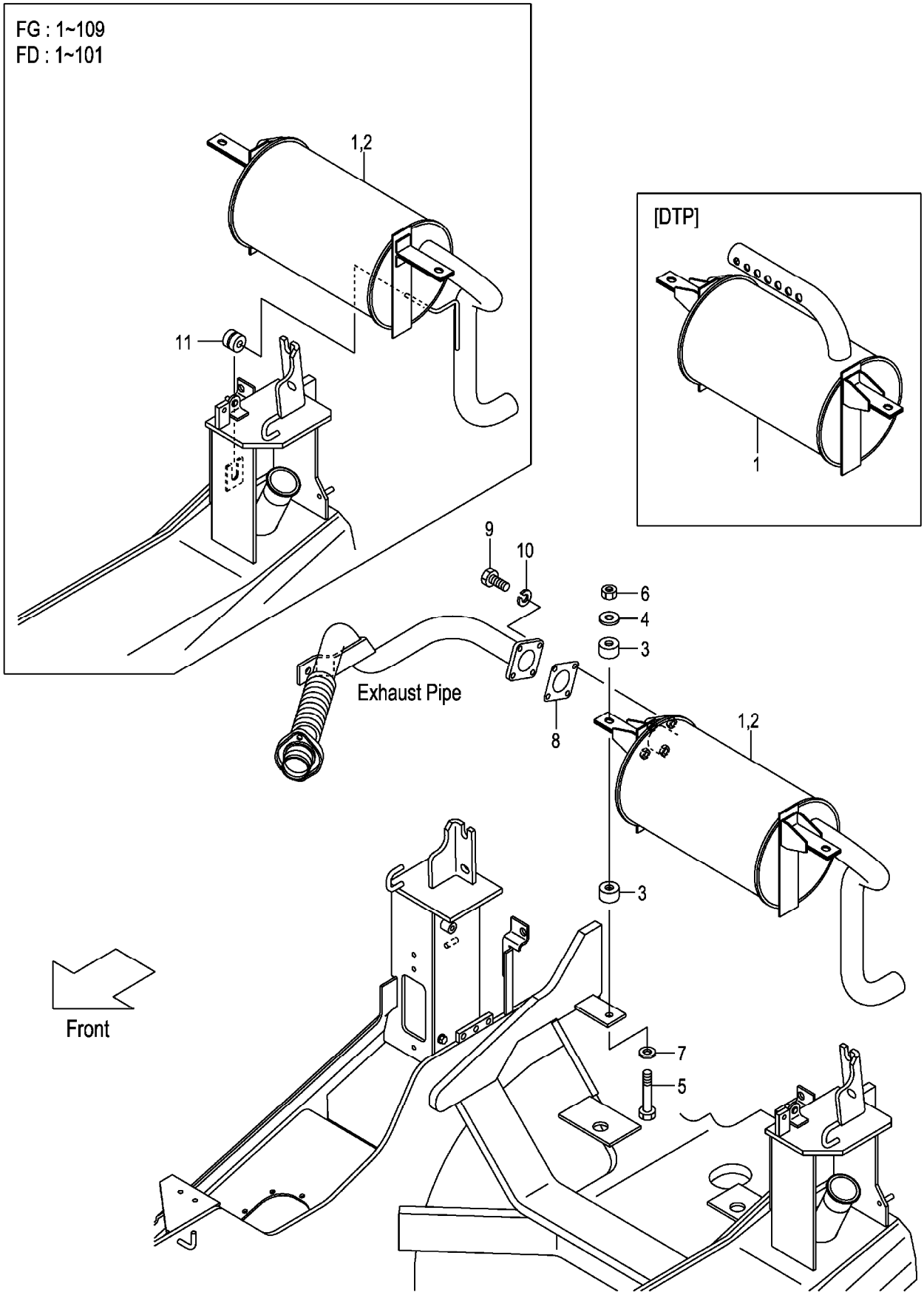

A:FG30C3 FG30T3 FG30W3
B:FD30C3 FD30T3 FD30W3

Item No	Part No.	Mark	Description		Req'd	Remarks : Serial No.
1	22N92-30101		MUFFLER,3T	ﾏﾌﾗ	1	
-	52B91-70101		MUFFLER,3T	ﾏﾌﾗ	1	A [EPM] INC.2
-	52N91-70101		MUFFLER,3T	ﾏﾌﾗ	1	B [EPM] INC.2
-	52N91-70201		MUFFLER,3T	ﾏﾌﾗ	1	[CBM]
-	52N51-70301		MUFFLER	ﾏﾌﾗ	1	[DTP]
2	532A1-70201		CATALYST	ｷｬﾀﾘｽﾄ	1	[EPM]
3	22252-32241		RUBBER,CUSHION	ﾗﾊﾞｰ	4	
4	22252-32251		WASHER	ﾜｯｼｬ	2	
5	21232-32551		BOLT	ﾎﾞﾙﾄ	2	
6	23652-12051		NUT	ﾅｯﾄ	2	
7	02000-00010		WASHER	ﾜｯｼｬ	2	
8	217G2-32001		GASKET	ｶﾞｽｹｯﾄ	1	
9	01100-08030		BOLT	ﾎﾞﾙﾄ	4	
10	02010-00008		WASHER	ﾜｯｼｬ	4	
11	214A2-12001		RUBBER	ﾗﾊﾞｰ	1	A:1-109 B:1-101

FIG.20 EXHAUST SYSTEM [TUE]

(F7032330) エキゾーストシステム

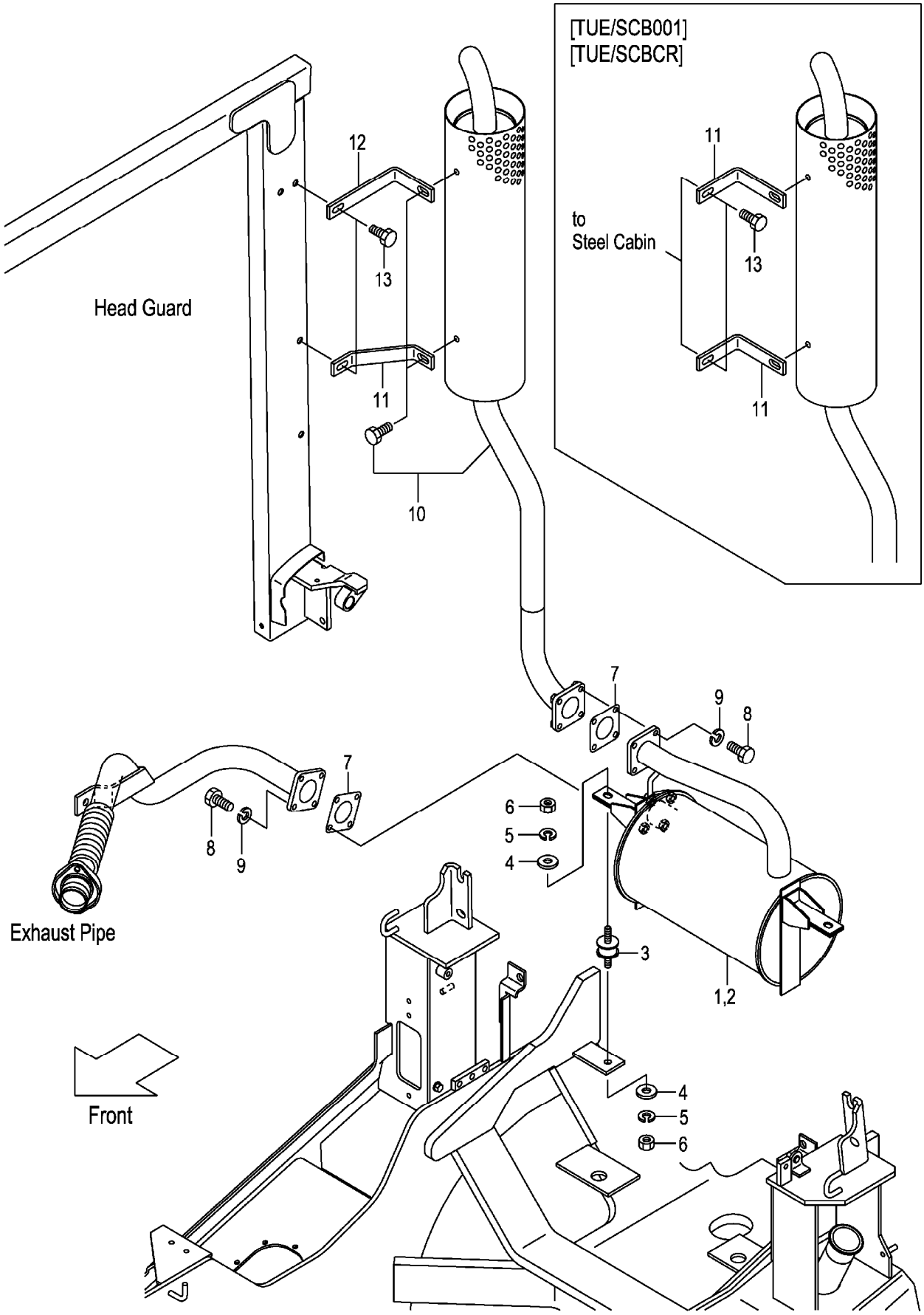

A:FG30C3 FG30T3 C:FD30C3 FD30T3
B:FG30W3 D:FD30W3

Item No	Part No.	Mark	Description		Req'd	Remarks : Serial No.
1	52N50-80201		MUFFLER	ﾏﾌﾗ	1	[TUE]
-	52B50-80211		MUFFLER	ﾏﾌﾗ	1	A,B [EPM/TUE] INC.2
-	52N50-80211		MUFFLER	ﾏﾌﾗ	1	C,D [EPM/TUE] INC.2
-	52N50-80221		MUFFLER	ﾏﾌﾗ	1	C,D [CBM/TUE]
2	532A1-70201		CATALYST	ｷｬﾀﾘｽﾄ	1	[EPM/TUE]
3	539A0-82201		RUBBER	ﾗﾊﾞｰ	2	[TUE]
4	124T3-43041		PLATE	ﾌﾟﾚｰﾄ	4	[TUE]
5	02010-00008		WASHER	ﾜｯｼｬ	4	[TUE]
6	01400-00008		NUT	ﾅｯﾄ	4	[TUE]
7	217G2-32001		GASKET	ｶﾞｽｹｯﾄ	2	[TUE]
8	01182-08025		BOLT	ﾎﾞﾙﾄ	8	[TUE]
9	02000-00008		WASHER	ﾜｯｼｬ	8	[TUE]
10	52N50-80301		MUFFLER,VERTICAL	ﾏﾌﾗ	1	[TUE]
11	52N50-82001		STAY	ｽﾃｰ	1	[TUE]
-	52N50-82021		STAY	ｽﾃｰ	2	[TUE/SCB001]
-	52N50-82021		STAY	ｽﾃｰ	2	A,B,C [TUE/SCBCR]
12	52N50-82011		STAY	ｽﾃｰ	1	[TUE] (WITHOUT TUE/SCB001,TUE/SCBCR)
13	01185-08020		BOLT	ﾎﾞﾙﾄ	2	[TUE]

FIG.21 EXHAUST SYSTEM (DIESEL):[DPF]

(F7032350) エキゾーストシステム

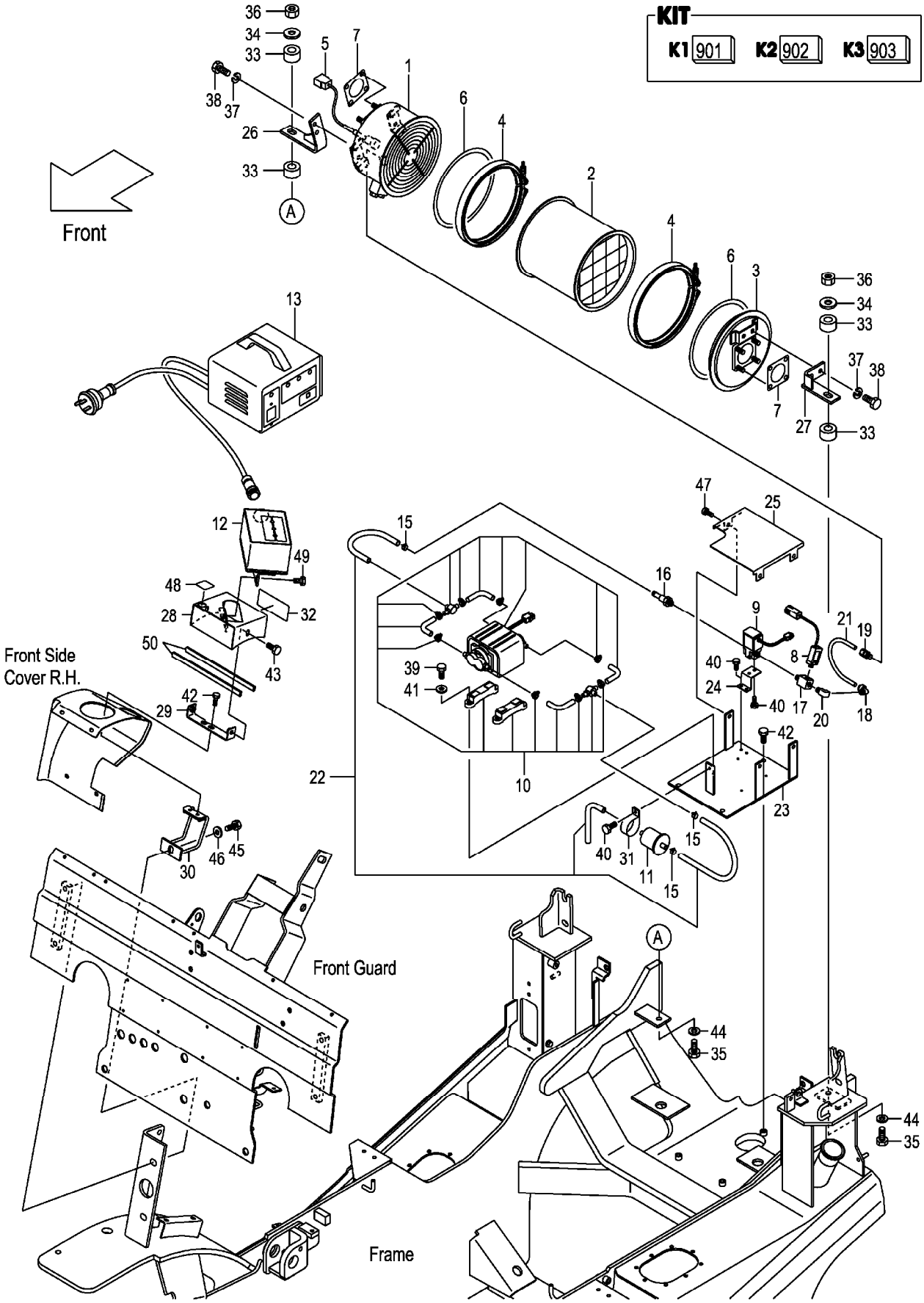

A:FD30C3 FD30T3

Item No	Part No.	Mark	Description		Req'd	Remarks : Serial No.
901	509P5-90101	K1	KIT,DPF-MUFFLER	DPFﾏﾌﾗｷｯﾄ	1	[DPF] INC.1-16
902	509P5-92511	K2	KIT,PIPING	ﾊﾟｲﾋﾟﾝｸﾞｷｯﾄ	1	[DPF] INC.15,16
A1	509P5-92001	*	MUFFLER-ASSY,DPF	ﾏﾌﾗｱｯｾﾝ	1	[DPF] INC.1-7
903	509P5-92061	K3	KIT,GASKET	ｶﾞｽｹｯﾄｷｯﾄ	2	[DPF] INC.6,7
1	509P5-92011	*	UNIT,INLET	ﾕﾆｯﾄ	1	[DPF]
2	509P5-92021	*	UNIT,FILTER	ﾕﾆｯﾄ	1	[DPF]
3	509P5-92031	*	UNIT,OUTLET	ﾕﾆｯﾄ	1	[DPF]
4	509P5-92041	*	V-BAND	Vﾊﾞﾝﾄﾞ	2	[DPF]
5	509P5-92051	*	SENSOR,TEMP	ｾﾝｻ	1	[DPF]
6	509P5-92531	*	GASKET,MUFFLER	ｶﾞｽｹｯﾄ	2	[DPF]
7	509P5-92541	*	GASKET,FLANGE	ｶﾞｽｹｯﾄ	2	[DPF]
8	509P5-92071	*	SENSOR,PRESS	ｾﾝｻ	1	[DPF]
9	509P5-92081	*	VALVE,SOLENOIDE	ﾊﾞﾙﾌﾞ	1	[DPF]
10	509P5-92091	*	PUMP,AIR	ﾎﾟﾝﾌﾟ	1	[DPF]
11	509P5-92101	*	FILTER,AIR	ﾌｨﾙﾀ	1	[DPF]
12	509P5-92111	*	UNIT,MONITOR	ﾕﾆｯﾄ	1	[DPF]
13	509P5-92121	*	UNIT,CONTROLLER	ﾕﾆｯﾄ	1	[DPF]
14	509P5-92241	+*	KIT,CONNECTOR	ｷｯﾄ	1	[DPF]
15	NO PART NO.	#*	CLIP	ｸﾘｯﾌﾟ	3	[DPF]
16	NO PART NO.	#*	NIPPLE	ﾆｯﾌﾟﾙ	1	[DPF]
17	509P5-92181		THREE-WAY	ｽﾘｰｳｴｲ	1	[DPF]
18	509P5-92201		ELBOW	ｴﾙﾎﾞ	1	[DPF]
19	509S5-92241		NIPPLE	ﾆｯﾌﾟﾙ	1	[DPF]
20	04112-00202		ELBOW	ｴﾙﾎﾞ	1	[DPF]
21	509P5-92211		PIPE,COPPER	ﾊﾟｲﾌﾟ	1	[DPF]
22	509P5-92231		HOSE	ﾎｰｽ	1	[DPF]
23	52N55-92261		BRACKET,PUMP	ﾌﾞﾗｹｯﾄ	1	[DPF]
24	539A5-92251		BRACKET,VALVE	ﾌﾞﾗｹｯﾄ	1	[DPF]
25	52N55-92601		COVER	ｶﾊﾞｰ	1	[DPF]
26	52N55-92131		BRACKET,MUFFLER,RH	ﾌﾞﾗｹｯﾄ	1	[DPF]
27	539A5-92141		BRACKET,MUFFLER,LH	ﾌﾞﾗｹｯﾄ	1	[DPF]
28	52N55-92401		BRACKET,MONITOR	ﾌﾞﾗｹｯﾄ	1	[DPF]
29	52N55-92671		BRACKET	ﾌﾞﾗｹｯﾄ	1	[DPF]
30	52N55-92631		BRACKET	ﾌﾞﾗｹｯﾄ	1	[DPF]
31	509P5-92491		BAND	ﾊﾞﾝﾄﾞ	1	[DPF]
32	509P5-92521		DECAL,DPF-CAUTION	ﾃﾞｶﾙ	1	[DPF]
33	22252-32241		RUBBER	ﾗﾊﾞｰ	4	[DPF]
34	22252-32251		WASHER	ﾜｯｼｬ	2	[DPF]
35	21232-32551		BOLT	ﾎﾞﾙﾄ	2	[DPF]
36	23652-12051		NUT	ﾅｯﾄ	2	[DPF]
37	02013-00008		WASHER	ﾜｯｼｬ	4	[DPF]
38	01109-08020		BOLT	ﾎﾞﾙﾄ	4	[DPF]
39	01170-04012		BOLT	ﾎﾞﾙﾄ	4	[DPF]
40	01183-05010		BOLT	ﾎﾞﾙﾄ	5	[DPF]
41	02000-00004		WASHER	ﾜｯｼｬ	4	[DPF]
42	01185-08016		BOLT	ﾎﾞﾙﾄ	5	[DPF]
43	273A6-42471		BOLT	ﾎﾞﾙﾄ	2	[DPF]
44	02000-00010		WASHER	ﾜｯｼｬ	2	[DPF]
45	01186-12030		BOLT	ﾎﾞﾙﾄ	1	[DPF]
46	02000-00012		WASHER	ﾜｯｼｬ	1	[DPF]

FIG.21 EXHAUST SYSTEM (DIESEL):[DPF]

(F7032350) エキゾーストシステム

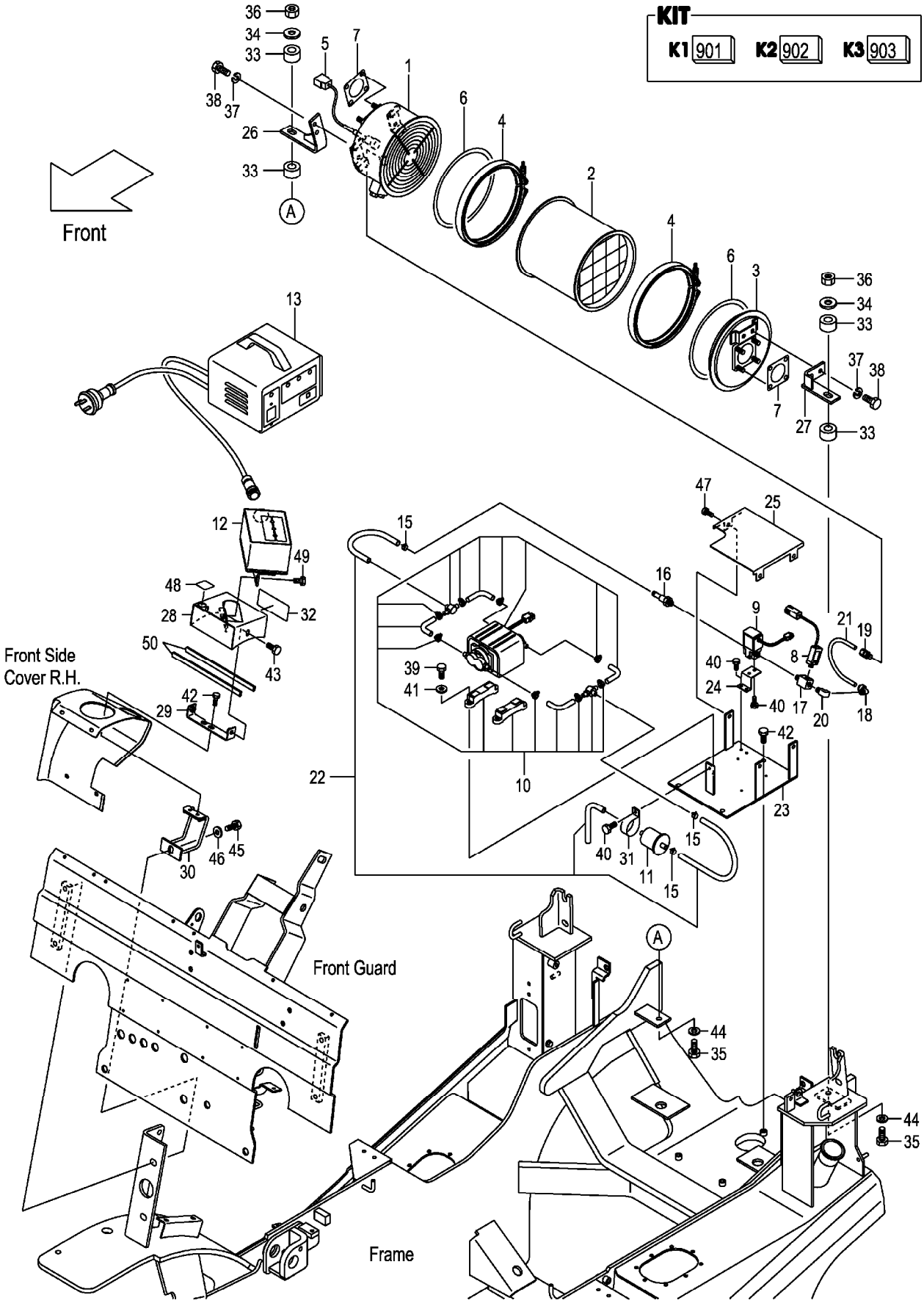

A:FD30C3 FD30T3

Item No	Part No.	Mark	Description		Req'd	Remarks : Serial No.
47	01183-08012		BOLT	ﾎﾞﾙﾄ	3	[DPF]
48	229F6-42201		SEAL,PANEL-COVER,A	ｼｰﾙ	1	[DPF]
49	01183-06012		BOLT	ﾎﾞﾙﾄ	2	[DPF]
50	524W3-83091		EDGING	ｴｯｼﾞﾝｸﾞ	2	[DPF]

M E M O

M E M O

FIG.22 DPF WIRE HARNESS (DIESEL):[DPF]

(F7032360) **DPFﾜｲﾔﾊｰﾈｽ**

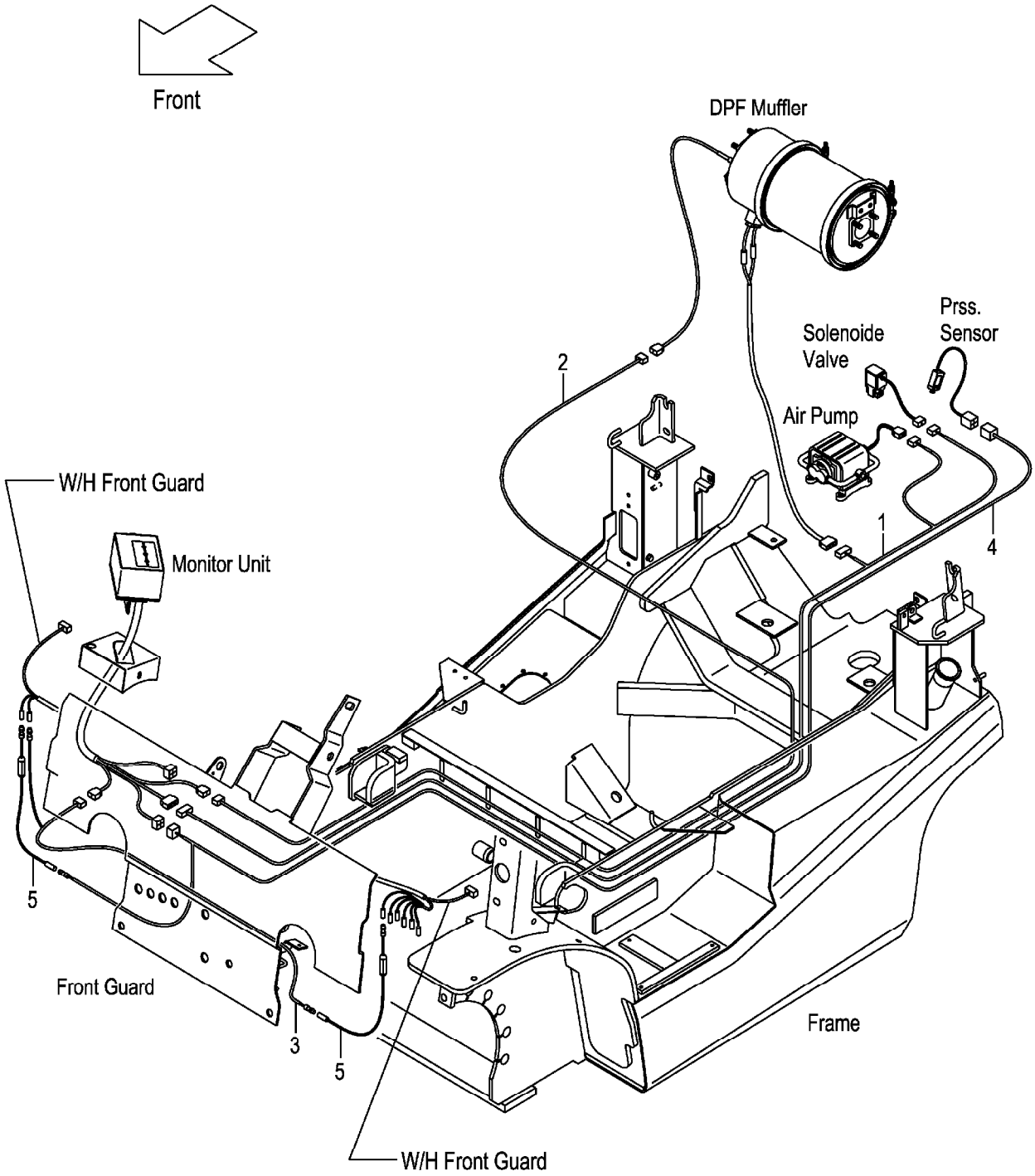

FIG.22

(F7032360)

A:FD30C3 FD30T3

Item No	Part No.	Mark	Description	Req'd	Remarks : Serial No.
1	52N55-92441		WIRE-HARNESS ﾜｲﾔﾊｰﾈｽ	1	[DPF] (MONITOR-HEATER&PUMP&VALVE)
2	52N55-92451		WIRE-HARNESS ﾜｲﾔﾊｰﾈｽ	1	[DPF](MONITOR-TEMP SENSOR)
3	52N55-92381		WIRE-HARNESS ﾜｲﾔﾊｰﾈｽ	1	[DPF](MONITOR-OPT TERMINAL)
4	52N55-92471		WIRE-HARNESS ﾜｲﾔﾊｰﾈｽ	1	[DPF] (MONITOR-PRESSURE SENSOR)
5	509P5-92481		WIRE-HARNESS ﾜｲﾔﾊｰﾈｽ	2	[DPF](FUSE BOX)

FIG.23 FRONT TUBE & JOINT (GASOLINE)

(F7032370) フロントチューブ&ジョイント

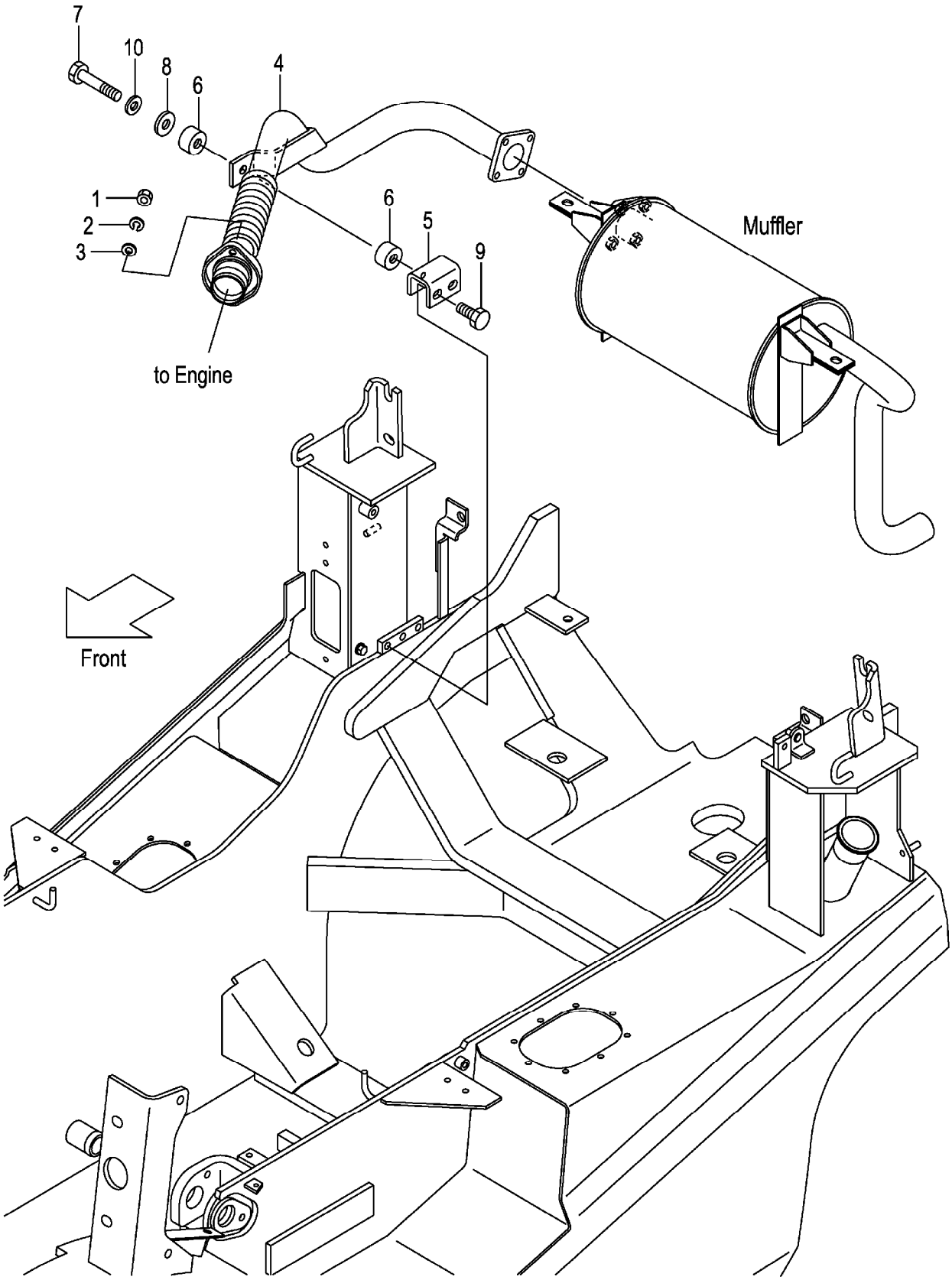

A:FG30C3 FG30T3 FG30W3

Item No	Part No.	Mark	Description		Req'd	Remarks : Serial No.
1	01400-20008		NUT	ﾅｯﾄ	2	
2	02010-00008		WASHER	ﾜｯｼｬ	2	
3	02000-00008		WASHER	ﾜｯｼｬ	2	
4	22B52-30111		PIPE,EXHAUST,K	ﾊﾟｲﾌﾟ	1	
5	22N52-32021		BRACKET	ﾌﾞﾗｹｯﾄ	1	110-
6	22252-32241		RUBBER,CUSHION	ﾗﾊﾞｰ	2	110-
7	21232-32551		BOLT	ﾎﾞﾙﾄ	1	110-
8	22252-32251		WASHER	ﾜｯｼｬ	1	110-110
-	23451-02011		WASHER	ﾜｯｼｬ	1	111-
9	01186-10020		BOLT	ﾎﾞﾙﾄ	2	110-
10	02000-00010		WASHER	ﾜｯｼｬ	1	111-

FIG.24 FRONT TUBE & JOINT (DIESEL)

(F7032380) フロントチューブ&ジョイント

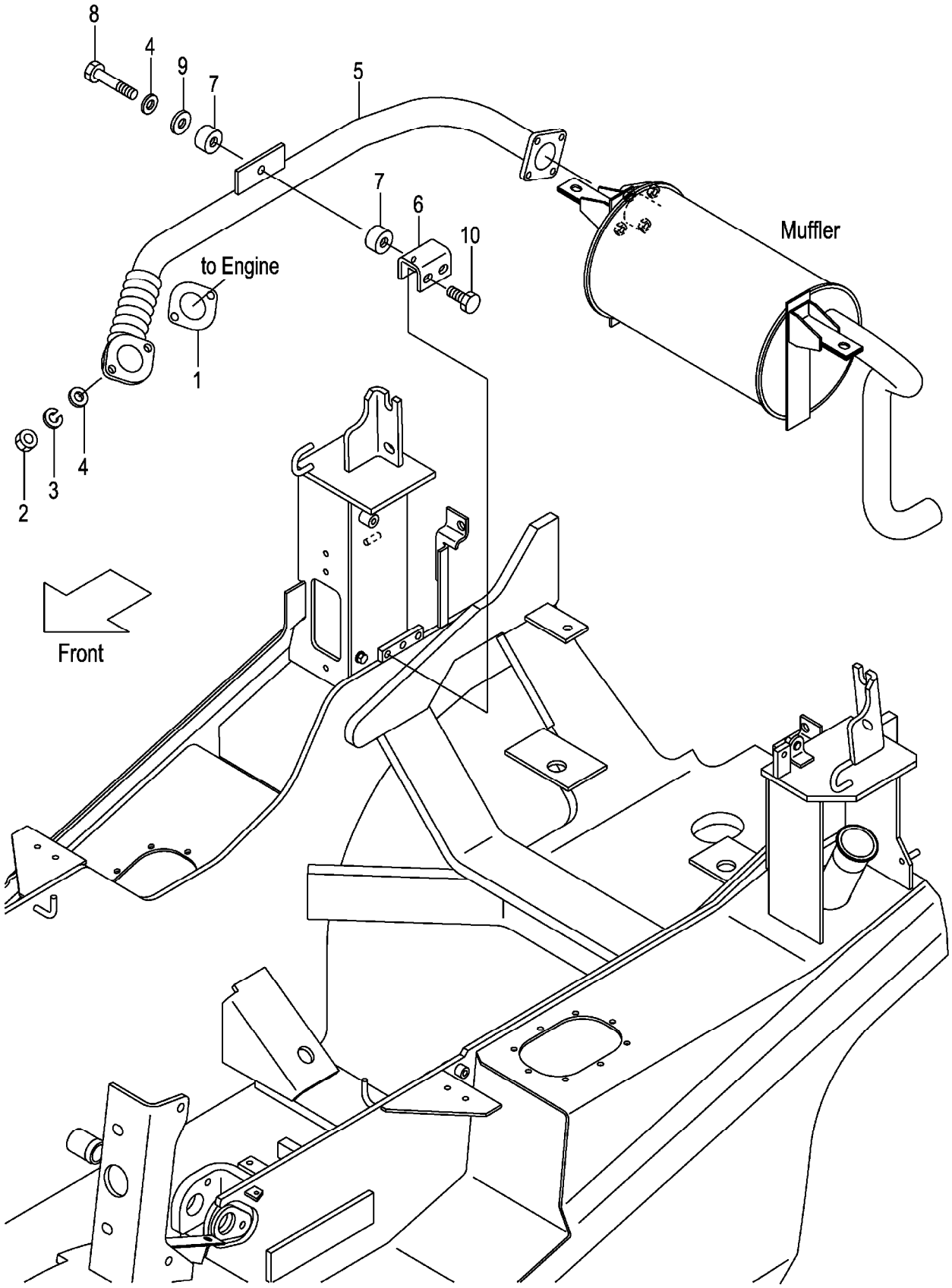

A:FD30C3 FD30T3 FD30W3

Item No	Part No.	Mark	Description		Req'd	Remarks : Serial No.
1	22N92-32001		GASKET	ｶﾞｽｹｯﾄ	1	
2	01400-20010		NUT	ﾅｯﾄ	2	
3	02010-00010		WASHER	ﾜｯｼｬ	2	
4	02000-00010		WASHER	ﾜｯｼｬ	2	1-126
-	02000-00010		WASHER	ﾜｯｼｬ	3	127-
5	22N52-30111		PIPE,EXHAUST,TD27	ﾊﾟｲﾌﾟ	1	
6	22N52-32021		BRACKET	ﾌﾞﾗｹｯﾄ	1	102-
7	22252-32241		RUBBER,CUSHION	ﾗﾊﾞｰ	2	102-
8	21232-32551		BOLT	ﾎﾞﾙﾄ	1	102-
9	22252-32251		WASHER	ﾜｯｼｬ	1	102-126
-	23451-02011		WASHER	ﾜｯｼｬ	1	127-
10	01186-10020		BOLT	ﾎﾞﾙﾄ	2	102-

FIG.25 FRONT TUBE & JOINT (DIESEL):[DPF]

(F7032390) フロントチューブ&ジョイント

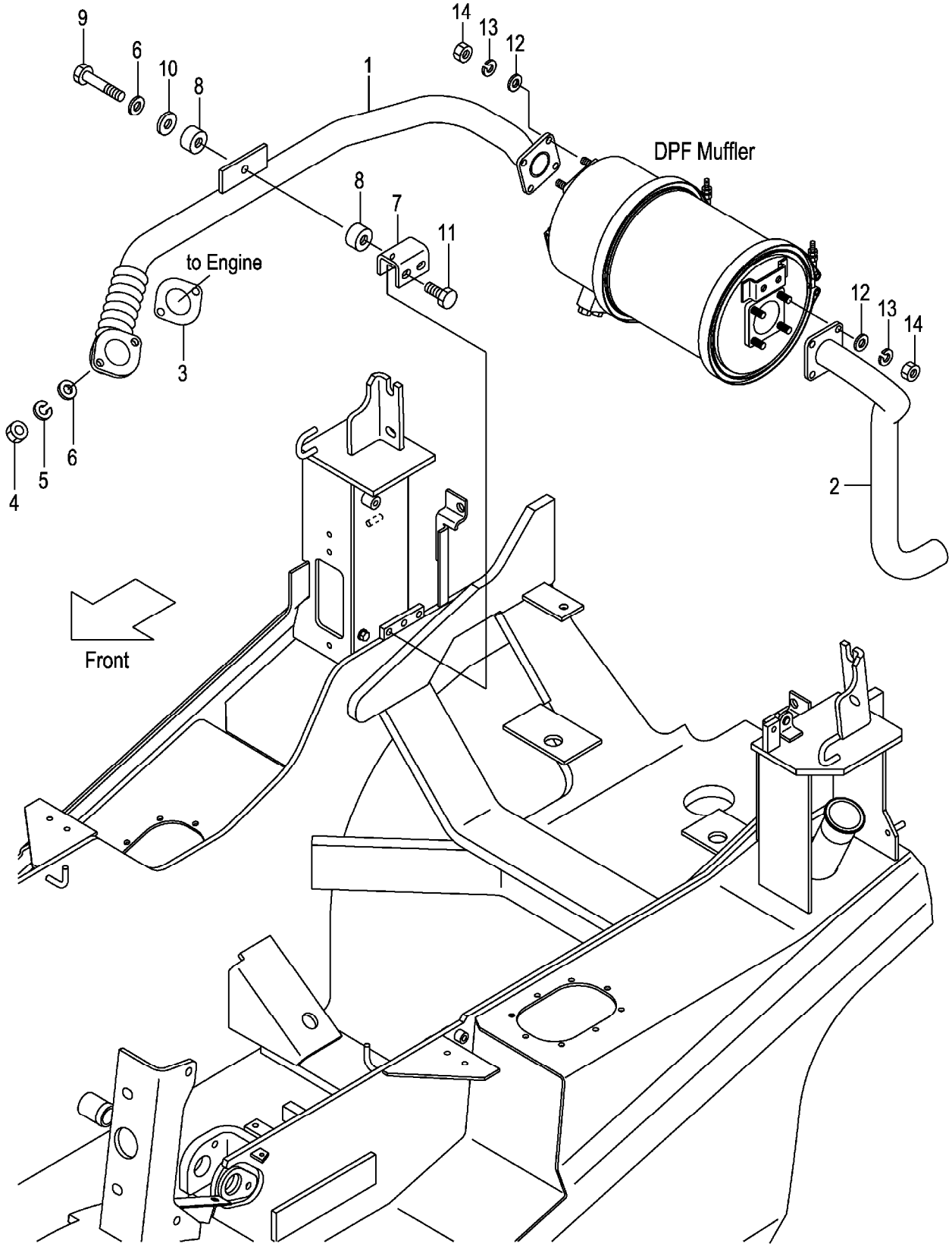

FIG.25

(F7032390)

A:FD30C3 FD30T3

Item No	Part No.	Mark	Description		Req'd	Remarks : Serial No.
1	52N55-92321		PIPE,EXHAUST,DPF	ﾊﾟｲﾌﾟ	1	[DPF]
2	52N95-92341		TUBE,TAIL	ﾁｭｰﾌﾞ	1	[DPF]
3	22N92-32001		GASKET	ｶﾞｽｹｯﾄ	1	[DPF]
4	01400-20010		NUT	ﾅｯﾄ	2	[DPF]
5	02010-00010		WASHER	ﾜｯｼｬ	2	[DPF]
6	02000-00010		WASHER	ﾜｯｼｬ	3	[DPF]
7	22N52-32021		BRACKET	ﾌﾞﾗｹｯﾄ	1	[DPF]
8	22252-32241		RUBBER,CUSHION	ﾗﾊﾞｰ	2	[DPF]
9	21232-32551		BOLT	ﾎﾞﾙﾄ	1	[DPF]
10	23451-02011		WASHER	ﾜｯｼｬ	1	[DPF]
11	01186-10020		BOLT	ﾎﾞﾙﾄ	2	[DPF]
12	02001-00008		WASHER	ﾜｯｼｬ	8	[DPF]
13	02013-00008		WASHER	ﾜｯｼｬ	8	[DPF]
14	01400-30008		NUT	ﾅｯﾄ	8	[DPF]

FIG.26 COMBINATION METER

(F7032410) コンビネーションメータ

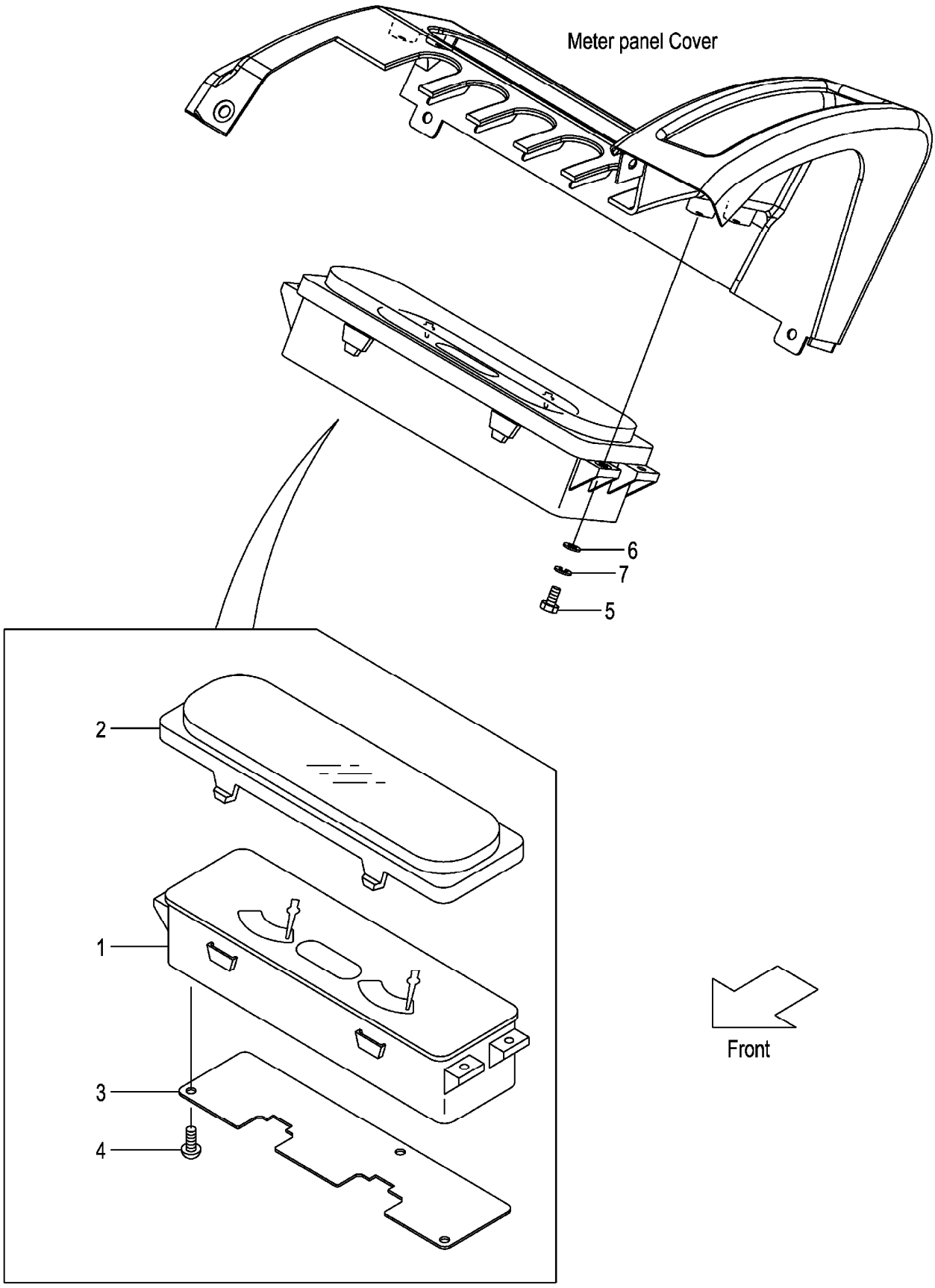

A:FG30C3 FG30T3 C:FD30C3 FD30T3
B:FG30W3 D:FD30W3

Item No	Part No.	Mark	Description	Req'd	Remarks : Serial No.
A1	22B52-40301		METER-ASSY,COMBINATION ｺﾝﾋﾞﾈｰｼｮﾝﾒｰﾀｱｯｾﾝ	1	A,B INC.1-4
-	22N52-40301		METER-ASSY,COMBINATION ｺﾝﾋﾞﾈｰｼｮﾝﾒｰﾀｱｯｾﾝ	1	C,D INC.1-4
-	52B56-20101		METER-ASSY,COMBINATION ｺﾝﾋﾞﾈｰｼｮﾝﾒｰﾀｱｯｾﾝ	1	A,B [OKM][SIL] INC.1-4
-	52B56-20101		METER-ASSY,COMBINATION ｺﾝﾋﾞﾈｰｼｮﾝﾒｰﾀｱｯｾﾝ	1	A [EXE][EXN] INC.1-4
-	52N56-20101		METER-ASSY,COMBINATION ｺﾝﾋﾞﾈｰｼｮﾝﾒｰﾀｱｯｾﾝ	1	C,D [OKM][SIL] INC.1-4
-	52N56-20101		METER-ASSY,COMBINATION ｺﾝﾋﾞﾈｰｼｮﾝﾒｰﾀｱｯｾﾝ	1	C [EXE][EXN] INC.1-4
1	NO PART NO.	#	METER,COMBINATION ﾒｰﾀ	1	A,B
-	NO PART NO.	#	METER,COMBINATION ﾒｰﾀ	1	C,D
-	NO PART NO.	#	METER,COMBINATION ﾒｰﾀ	1	A,B [OKM][SIL]
-	NO PART NO.	#	METER,COMBINATION ﾒｰﾀ	1	A [EXE][EXN]
-	NO PART NO.	#	METER,COMBINATION ﾒｰﾀ	1	C,D [OKM][SIL]
-	NO PART NO.	#	METER,COMBINATION ﾒｰﾀ	1	C [EXE][EXN]
2	22N52-42501		COVER ｶﾊﾞｰ	1	
3	22N52-42511		PLATE ﾌﾟﾚｰﾄ	1	
4	01043-03010		SCREW ｽｸﾘｭ	3	
5	01100-04012		BOLT ﾎﾞﾙﾄ	4	A,B:1-110 C,D:1-126
-	01185-04012		BOLT ﾎﾞﾙﾄ	4	A,B:111- C,D:127-
6	02000-00004		WASHER ﾜｯｼｬ	4	A,B:1-110 C,D:1-126
7	02010-00004		WASHER ﾜｯｼｬ	4	A,B:1-110 C,D:1-126

FRONT GUARD WIRE HARNESS (CLUTCH)(OIL CLUTCH)

FIG.27

(F7032420) フロントガードワイヤハーネス

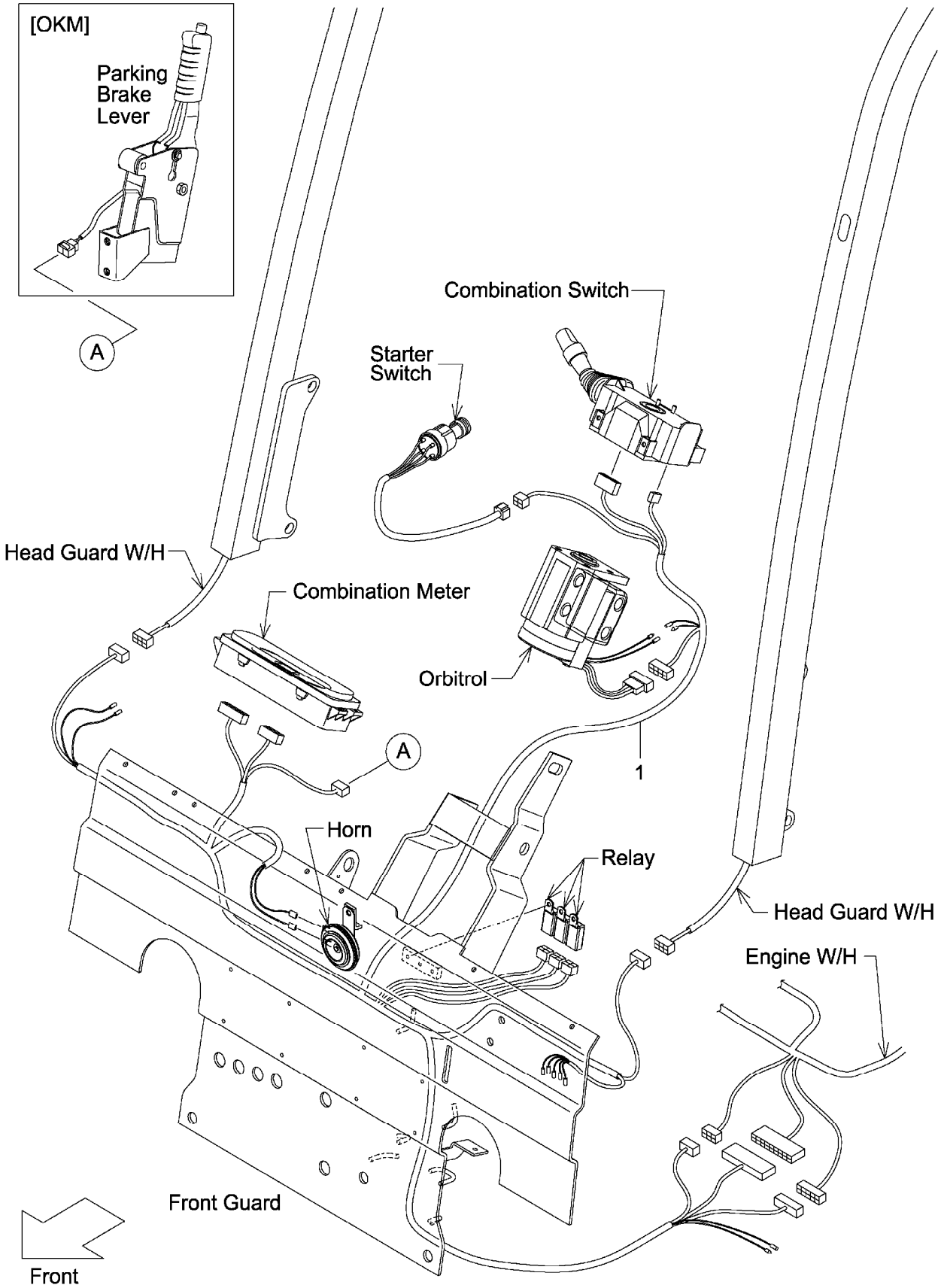

A:FG30C3 FG30W3
B:FD30C3 FD30W3

Item No	Part No.	Mark	Description	Req'd	Remarks : Serial No.
1	22N42-42201		WIRE-HARNESS,F.GUARD ﾜｲﾔﾊｰﾈｽ	1	
-	52N43-72101		WIRE-HARNESS,F.GUARD ﾜｲﾔﾊｰﾈｽ	1	[FC]

FIG.28 FRONT GUARD WIRE HARNESS (TOR-CON)

(F7032430) ﾌﾛﾝﾄｶﾞｰﾄﾞﾜｲﾔﾊｰﾈｽ

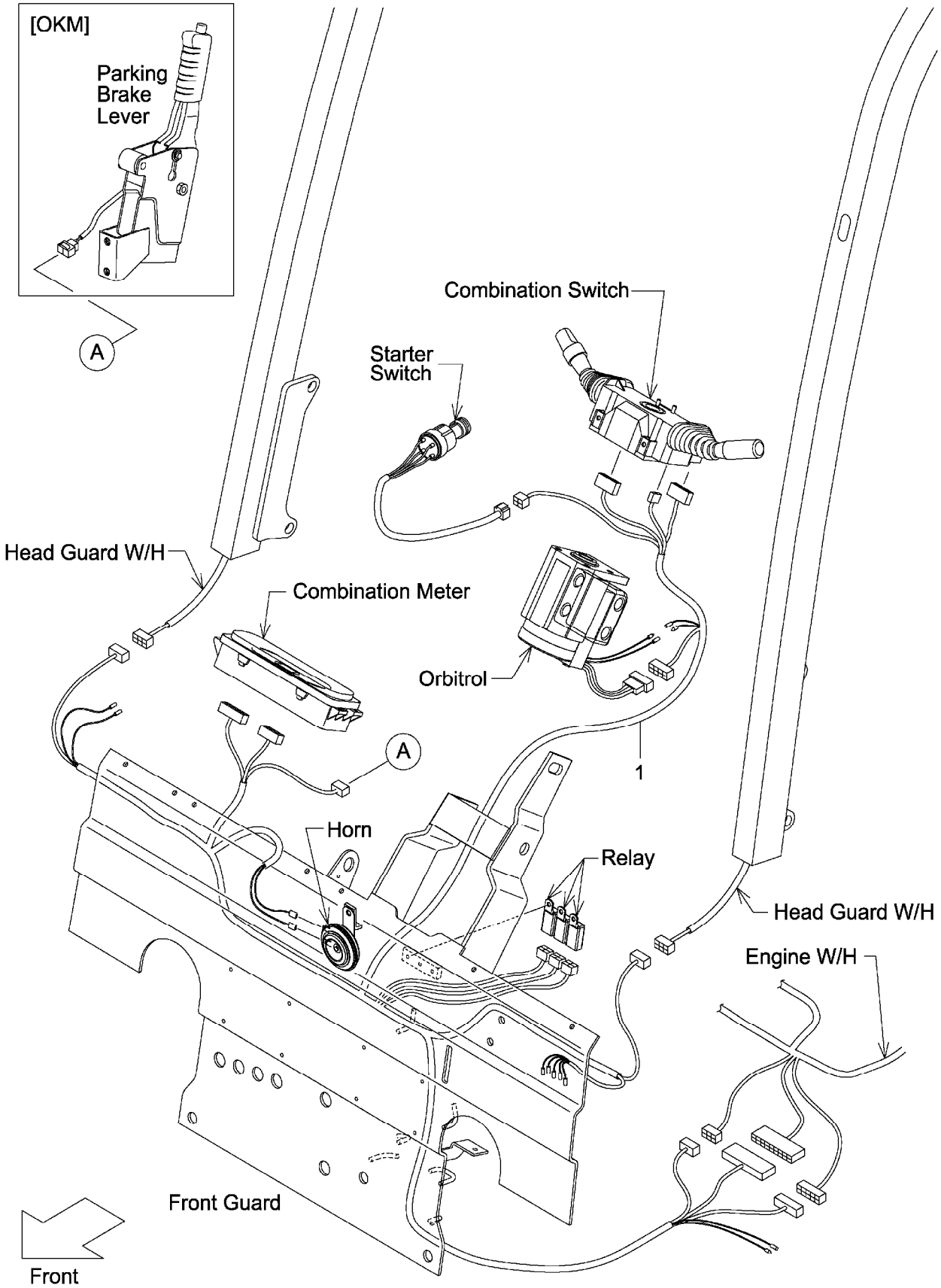

A:FG30T3
B:FD30T3

Item No	Part No.	Mark	Description	Req'd	Remarks : Serial No.
1	22N52-42201		WIRE-HARNESS,F.GUARD ﾜｲﾔﾊｰﾈｽ	1	
-	52N53-72101		WIRE-HARNESS,F.GUARD ﾜｲﾔﾊｰﾈｽ	1	[FC]
-	52N52-32001		WIRE-HARNESS,F.GUARD ﾜｲﾔﾊｰﾈｽ	1	[LCR]
-	52N53-82001		WIRE-HARNESS,F.GUARD ﾜｲﾔﾊｰﾈｽ	1	[EXN]
-	52N53-72301		WIRE-HARNESS,F.GUARD ﾜｲﾔﾊｰﾈｽ	1	[FC/LCR]
-	52N53-72401		WIRE-HARNESS,F.GUARD ﾜｲﾔﾊｰﾈｽ	1	[FC/EXN]
-	52N52-32401		WIRE-HARNESS,F.GUARD ﾜｲﾔﾊｰﾈｽ	1	[LCR/EXN]
-	52N52-32501		WIRE-HARNESS,F.GUARD ﾜｲﾔﾊｰﾈｽ	1	[FC/LCR/EXN]

FIG.29 COMBINATION SWITCH (CLUTCH)(OIL CLUTCH)

(F7032440) コンビネーションスイッチ

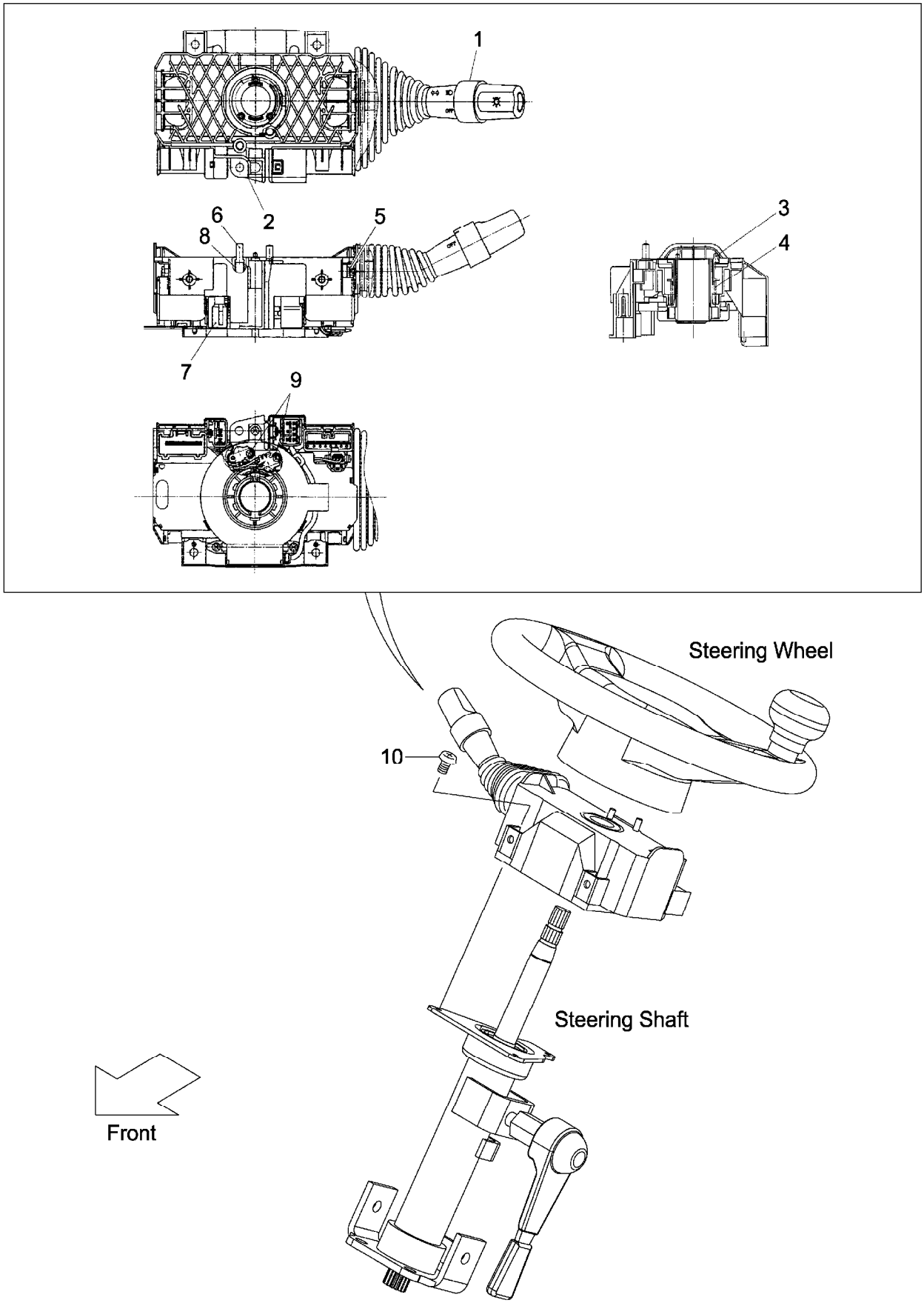

A:FG30C3 FG30W3
B:FD30C3 FD30W3

Item No	Part No.	Mark	Description		Req'd	Remarks : Serial No.
A1	239A2-40501		SWITCH-ASSY,COMBINATION	コンビネーションスイッチアッセン	1	INC.1-9
1	280C2-42331		SWITCH,TURN-SIGNAL	スイッチ	1	
2	NO PART NO.	#	BODY	ボディ	1	
3	NO PART NO.	#	CAM,CANCEL,RH	カム	1	
4	NO PART NO.	#	SPRING	スプリング	1	
5	NO PART NO.	#	SCREW	スクリュ	4	
6	280C2-42351		CONTACT,HORN	コンタクト	2	
7	NO PART NO.	#	CODE,CP-HORN	コード	1	
8	NO PART NO.	#	SPRING	スプリング	2	
9	NO PART NO.	#	SCREW	スクリュ	2	
10	01033-05014		SCREW	スクリュ	3	

FIG.30 COMBINATION SWITCH (TOR-CON)

(F7032450) コンビネーションスイッチ

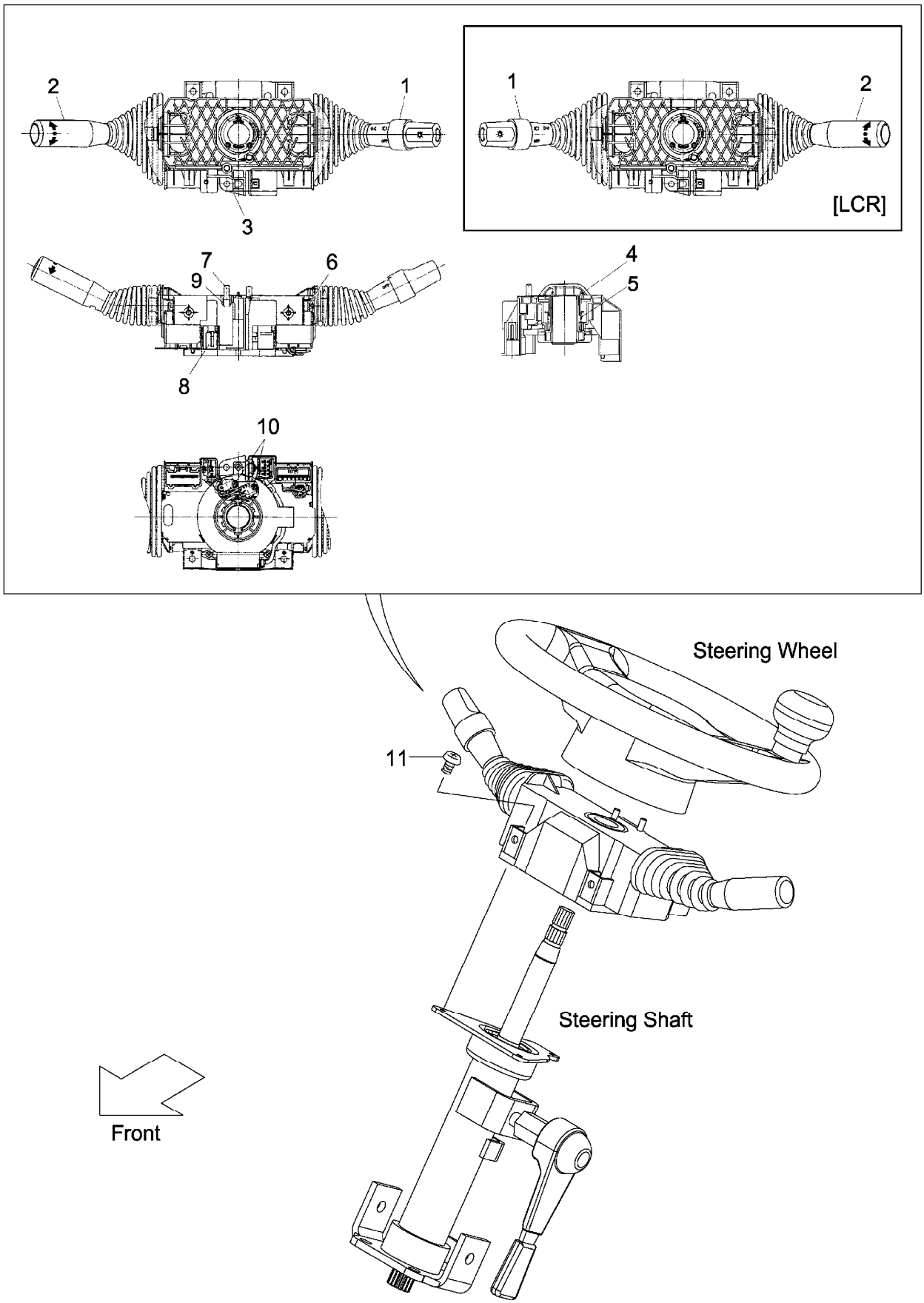

A:FG30T3
B:FD30T3

Item No	Part No.	Mark	Description	Req'd	Remarks : Serial No.
A1	209K2-40501		SWITCH-ASSY,COMBINATION コンビネーションスイッチアッセン	1	INC.1-10
-	509K2-30101		SWITCH-ASSY,COMBINATION コンビネーションスイッチアッセン	1	[LCR] INC.1-10
1	280C2-42331		SWITCH,TURN-SIGNAL スイッチ	1	
-	280C2-42301		SWITCH,TURN-SIGNAL スイッチ	1	[LCR]
2	280C2-42341		SWITCH,DIRECTION スイッチ	1	
-	280C2-42311		SWITCH,DIRECTION スイッチ	1	[LCR]
3	NO PART NO.	#	BODY ボディ	1	
4	NO PART NO.	#	CAM,CANCEL,RH カム	1	
-	NO PART NO.	#	CAM,CANCEL,RH カム	1	[LCR]
5	NO PART NO.	#	SPRING スプリング	1	
6	NO PART NO.	#	SCREW スクリュ	4	
7	280C2-42351		CONTACT,HORN コンタクト	2	
8	NO PART NO.	#	CODE,CP-HORN コード	1	
9	NO PART NO.	#	SPRING スプリング	2	
10	NO PART NO.	#	SCREW スクリュ	2	
11	01033-05014		SCREW スクリュ	3	

FIG.31 ELECTRIC PARTS (GASOLINE:CLUTCH & OIL CLUTCH)

(F7032460) エレクトリックパーツ

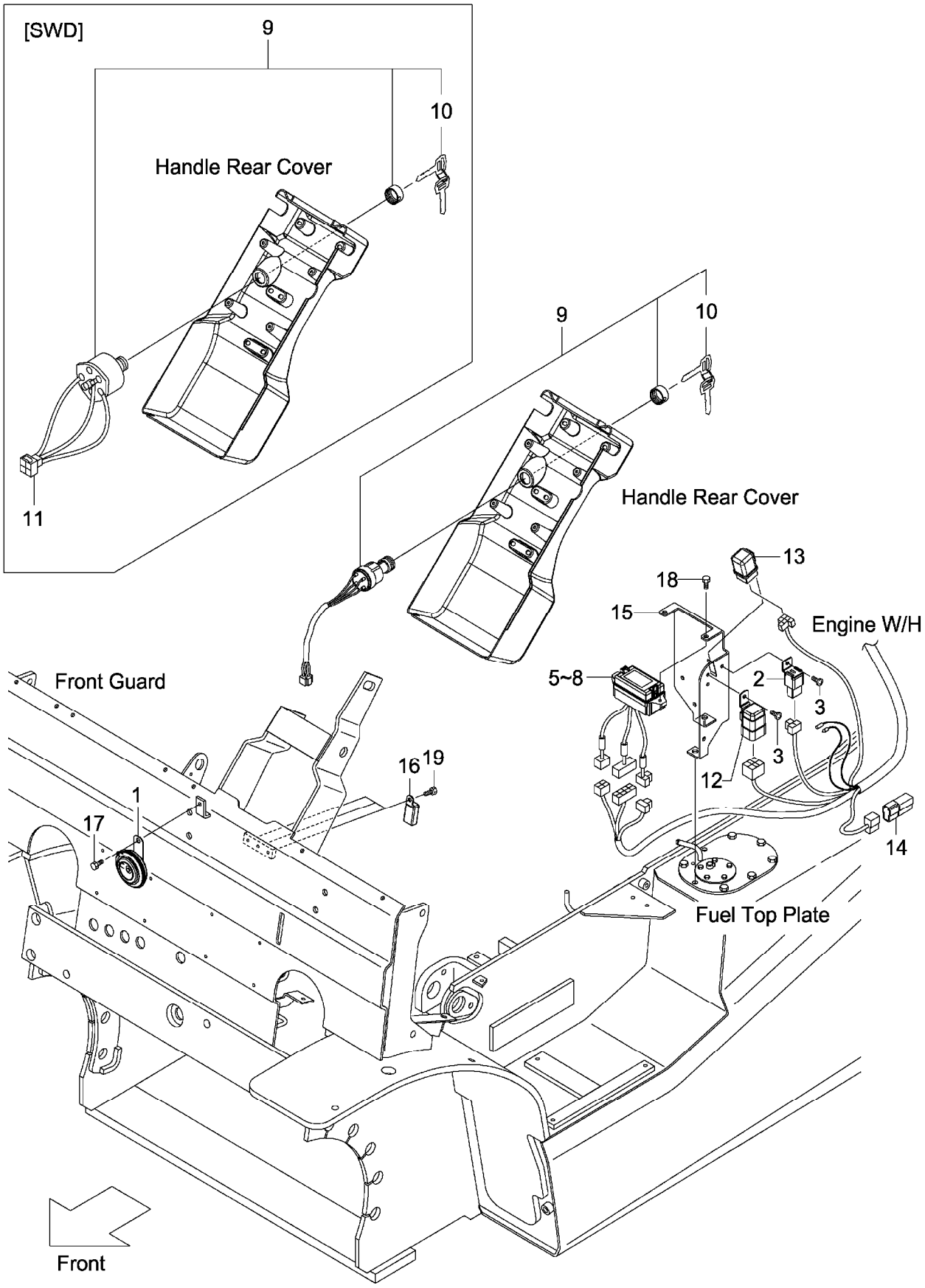

A:FG30C3 FG30W3

Item No	Part No.	Mark	Description		Req'd	Remarks : Serial No.
1	216G2-43651		HORN	ﾎｰﾝ	1	
2	216G2-43711		UNIT,FLASHER	ﾕﾆｯﾄ	1	
3	214A2-42611		SCREW	ｽｸﾘｭ	2	
4	04913-10200	+	BAND	ﾊﾞﾝﾄﾞ	4	
5	22N52-42101		BOX,FUSE	ﾎﾞｯｸｽ	1	INC.6-8
6	22N52-42311		FUSE,3A	ﾋｭｰｽﾞ	5	
7	22N52-42321		FUSE,7.5A	ﾋｭｰｽﾞ	5	
8	22N52-42331		FUSE,15A	ﾋｭｰｽﾞ	3	
9	216G2-42311		SWITCH,STARTER	ｽｲｯﾁ	1	INC.10
-	24352-42521		SWITCH,STARTER	ｽｲｯﾁ	1	[SWD] INC.10
10	216G2-43401		KEY,SPARE,511323	ｷｰ	1	(1SET=2PCS)
-	216G2-43411		KEY,SPARE,512421	ｷｰ	(1)	(1SET=2PCS)
-	216G2-43421		KEY,SPARE,513454	ｷｰ	(1)	(1SET=2PCS)
-	93956-59279		KEY,SPARE,511323	ｷｰ	1	[SWD](1SET=2PCS)
11	534A7-72001		WIRE,LEAD	ﾜｲﾔ	1	[SWD]
12	216G2-42321		RELAY,STARTER	ﾘﾚｰ	1	
13	228F2-42131		RELAY,AUTO-CHOKE	ﾘﾚｰ	1	
14	21152-42091		DIODE,MOLD-UNIT	ﾀﾞｲｵｰﾄﾞ	1	
15	22N52-42021		BRACKET,ELECTRIC	ﾌﾞﾗｹｯﾄ	1	
16	209K2-42351		RELAY,1A	ﾘﾚｰ	3	
17	01185-08016		BOLT	ﾎﾞﾙﾄ	1	
18	01185-06016		BOLT	ﾎﾞﾙﾄ	2	
19	01183-06010		BOLT	ﾎﾞﾙﾄ	3	

FIG.32 ELECTRIC PARTS (GASOLINE:TOR-CON)

(F7032470) エレクトリックパーツ

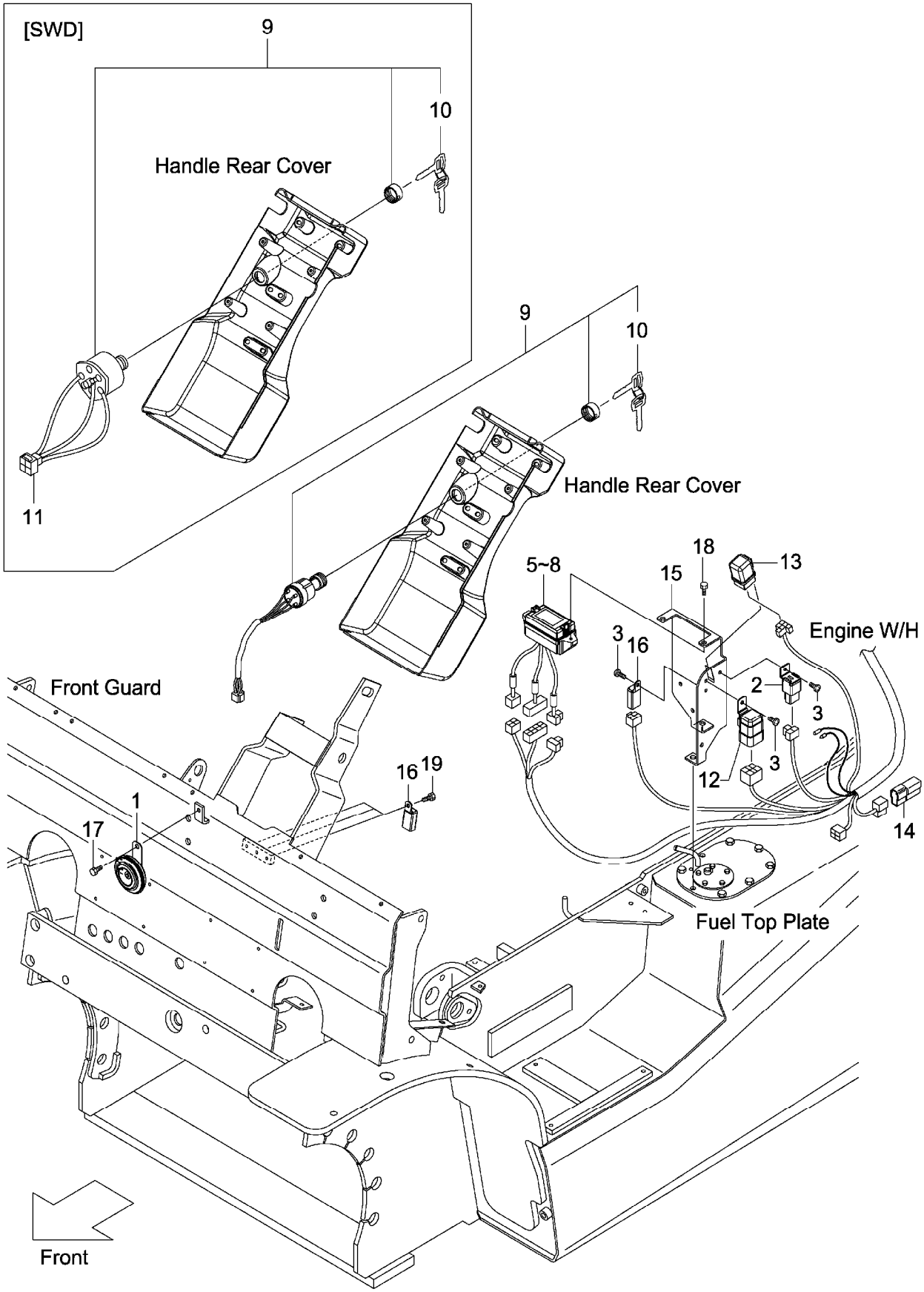

A:FG30T3

Item No	Part No.	Mark	Description		Req'd	Remarks : Serial No.
1	216G2-43651		HORN	ﾎｰﾝ	1	
2	216G2-43711		UNIT,FLASHER	ﾕﾆｯﾄ	1	
3	214A2-42611		SCREW	ｽｸﾘｭ	3	
4	04913-10200	+	BAND	ﾊﾞﾝﾄﾞ	4	
5	22N52-42101		BOX,FUSE	ﾎﾞｯｸｽ	1	INC.6-8
6	22N52-42311		FUSE,3A	ﾋｭｰｽﾞ	5	
7	22N52-42321		FUSE,7.5A	ﾋｭｰｽﾞ	5	
8	22N52-42331		FUSE,15A	ﾋｭｰｽﾞ	3	
9	216G2-42311		SWITCH,STARTER	ｽｲｯﾁ	1	INC.10
-	24352-42521		SWITCH,STARTER	ｽｲｯﾁ	1	[SWD] INC.10
10	216G2-43401		KEY,SPARE,511323	ｷｰ	1	(1SET=2PCS)
-	216G2-43411		KEY,SPARE,512421	ｷｰ	(1)	(1SET=2PCS)
-	216G2-43421		KEY,SPARE,513454	ｷｰ	(1)	(1SET=2PCS)
-	93956-59279		KEY,SPARE,511323	ｷｰ	1	[SWD](1SET=2PCS)
11	534A7-72001		WIRE,LEAD	ﾜｲﾔ	1	[SWD]
12	216G2-42321		RELAY,STARTER	ﾘﾚｰ	1	
13	228F2-42131		RELAY,AUTO-CHOKE	ﾘﾚｰ	1	
14	21152-42091		DIODE,MOLD-UNIT	ﾀﾞｲｵｰﾄﾞ	1	
15	22N52-42021		BRACKET,ELECTRIC	ﾌﾞﾗｹｯﾄ	1	
16	209K2-42351		RELAY,1A	ﾘﾚｰ	4	
17	01185-08016		BOLT	ﾎﾞﾙﾄ	1	
18	01185-06016		BOLT	ﾎﾞﾙﾄ	2	
19	01183-06010		BOLT	ﾎﾞﾙﾄ	3	

FIG.33 ELECTRIC PARTS (DIESEL:CLUTCH & OIL CLUTCH)

(F7032480) エレクトリックパーツ

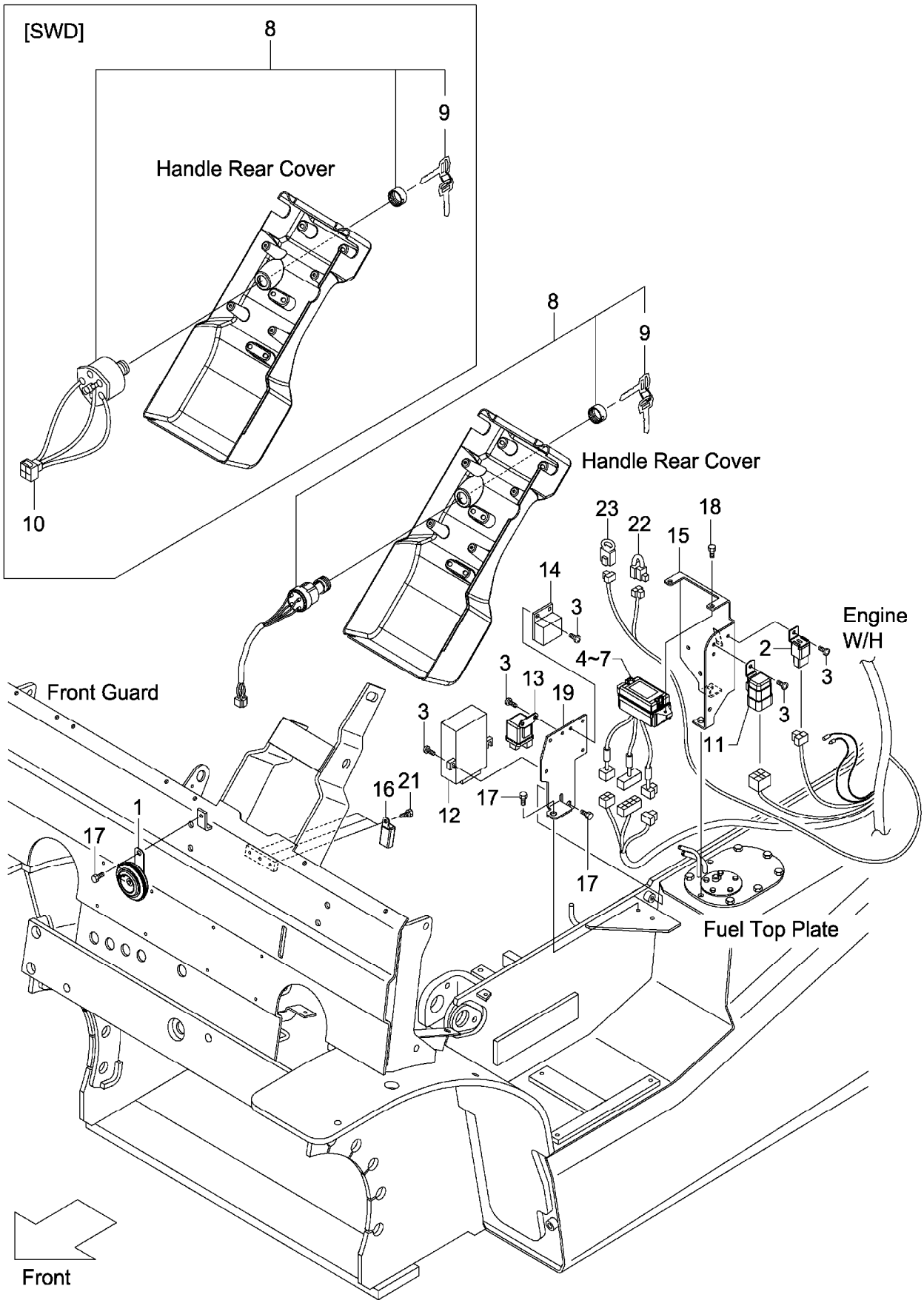

A:FD30C3 FD30W3

Item No	Part No.	Mark	Description		Req'd	Remarks : Serial No.
1	216G2-43651		HORN	ﾎｰﾝ	1	
2	216G2-43711		UNIT,FLASHER	ﾕﾆｯﾄ	1	
3	214A2-42611		SCREW	ｽｸﾘｭ	8	
4	22N52-42101		BOX,FUSE	ﾎﾞｯｸｽ	1	INC.5-7
5	22N52-42311		FUSE,3A	ﾋｭｰｽﾞ	5	
6	22N52-42321		FUSE,7.5A	ﾋｭｰｽﾞ	5	
7	22N52-42331		FUSE,15A	ﾋｭｰｽﾞ	3	
8	216G2-42311		SWITCH,STARTER	ｽｲｯﾁ	1	INC.9
-	24352-42521		SWITCH,STARTER	ｽｲｯﾁ	1	[SWD] INC.9
9	216G2-43401		KEY,SPARE,511323	ｷｰ	1	(1SET=2PCS)
-	216G2-43411		KEY,SPARE,512421	ｷｰ	(1)	(1SET=2PCS)
-	216G2-43421		KEY,SPARE,513454	ｷｰ	(1)	(1SET=2PCS)
-	93956-59279		KEY,SPARE,511323	ｷｰ	1	[SWD](1SET=2PCS)
10	534A7-72001		WIRE,LEAD	ﾜｲﾔ	1	[SWD]
11	216G2-42321		RELAY,STARTER	ﾘﾚｰ	1	
12	242F2-42301		TIMER,QGS-CONTROLLER	ﾀｲﾏ	1	
13	242F2-42311		RELAY,GLOW-PLUG	ﾘﾚｰ	1	
14	242F2-42321		DETECTOR	ﾃﾞｨﾃｸﾀ	1	
15	22N52-42021		BRACKET,ELECTRIC	ﾌﾞﾗｹｯﾄ	1	
16	209K2-42351		RELAY,1A	ﾘﾚｰ	3	
17	01185-08016		BOLT	ﾎﾞﾙﾄ	3	
18	01185-06016		BOLT	ﾎﾞﾙﾄ	2	
19	22N52-42031		BRACKET,ELECTRIC	ﾌﾞﾗｹｯﾄ	1	
20	04913-10200	+	BAND	ﾊﾞﾝﾄﾞ	4	
21	01183-06010		BOLT	ﾎﾞﾙﾄ	3	
22	26062-42881		RESISTOR	ﾚｼﾞｽﾀ	1	1-126
-	22N52-42951		RESISTOR	ﾚｼﾞｽﾀ	1	127-168
-	22N52-43001		RESISTOR	ﾚｼﾞｽﾀ	1	169-
23	21152-42091		DIODE	ﾀﾞｲｵｰﾄﾞ	1	127-

FIG.34 ELECTRIC PARTS (DIESEL:TOR-CON)

(F7032490) エレクトリックパーツ

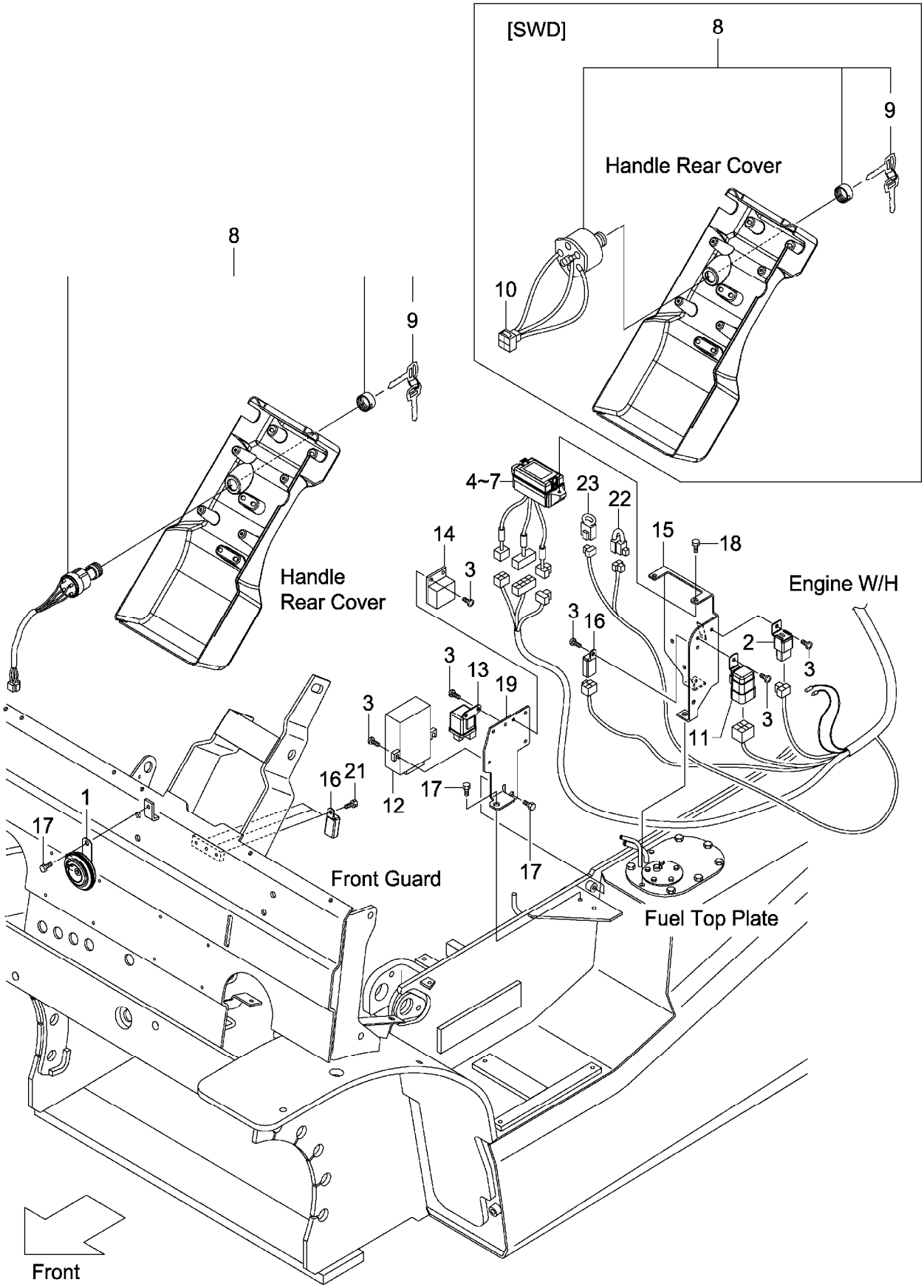

A:FD30T3

Item No	Part No.	Mark	Description		Req'd	Remarks : Serial No.
1	216G2-43651		HORN	ﾎｰﾝ	1	
2	216G2-43711		UNIT,FLASHER	ﾕﾆｯﾄ	1	
3	214A2-42611		SCREW	ｽｸﾘｭ	9	
4	22N52-42101		BOX,FUSE	ﾎﾞｯｸｽ	1	INC.5-7
5	22N52-42311		FUSE,3A	ﾋｭｰｽﾞ	5	
6	22N52-42321		FUSE,7.5A	ﾋｭｰｽﾞ	5	
7	22N52-42331		FUSE,15A	ﾋｭｰｽﾞ	3	
8	216G2-42311		SWITCH,STARTER	ｽｲｯﾁ	1	INC.9
-	24352-42521		SWITCH,STARTER	ｽｲｯﾁ	1	[SWD] INC.9
9	216G2-43401		KEY,SPARE,511323	ｷｰ	1	(1SET=2PCS)
-	216G2-43411		KEY,SPARE,512421	ｷｰ	(1)	(1SET=2PCS)
-	216G2-43421		KEY,SPARE,513454	ｷｰ	(1)	(1SET=2PCS)
-	93956-59279		KEY,SPARE,511323	ｷｰ	1	[SWD](1SET=2PCS)
10	534A7-72001		WIRE,LEAD	ﾜｲﾔ	1	[SWD]
11	216G2-42321		RELAY,STARTER	ﾘﾚｰ	1	
12	242F2-42301		TIMER,QGS-CONTROLLER	ﾀｲﾏ	1	
13	242F2-42311		RELAY,GLOW-PLUG	ﾘﾚｰ	1	
14	242F2-42321		DETECTOR	ﾃﾞｨﾃｸﾀ	1	
15	22N52-42021		BRACKET,ELECTRIC	ﾌﾞﾗｹｯﾄ	1	
16	209K2-42351		RELAY,1A	ﾘﾚｰ	4	
17	01185-08016		BOLT	ﾎﾞﾙﾄ	3	
18	01185-06016		BOLT	ﾎﾞﾙﾄ	2	
19	22N52-42031		BRACKET,ELECTRIC	ﾌﾞﾗｹｯﾄ	1	
20	04913-10200	+	BAND	ﾊﾞﾝﾄﾞ	4	
21	01183-06010		BOLT	ﾎﾞﾙﾄ	3	
22	26062-42881		RESISTOR	ﾚｼﾞｽﾀ	1	1-126
-	22N52-42951		RESISTOR	ﾚｼﾞｽﾀ	1	127-168
-	22N52-43001		RESISTOR	ﾚｼﾞｽﾀ	1	169-
23	21152-42091		DIODE	ﾀﾞｲｵｰﾄﾞ	1	127-

ENGINE WIRE HARNESS
FIG.35 (GASOLINE:CLUTCH & OIL CLUTCH)

(F70324A0) エンジンワイヤハーネス

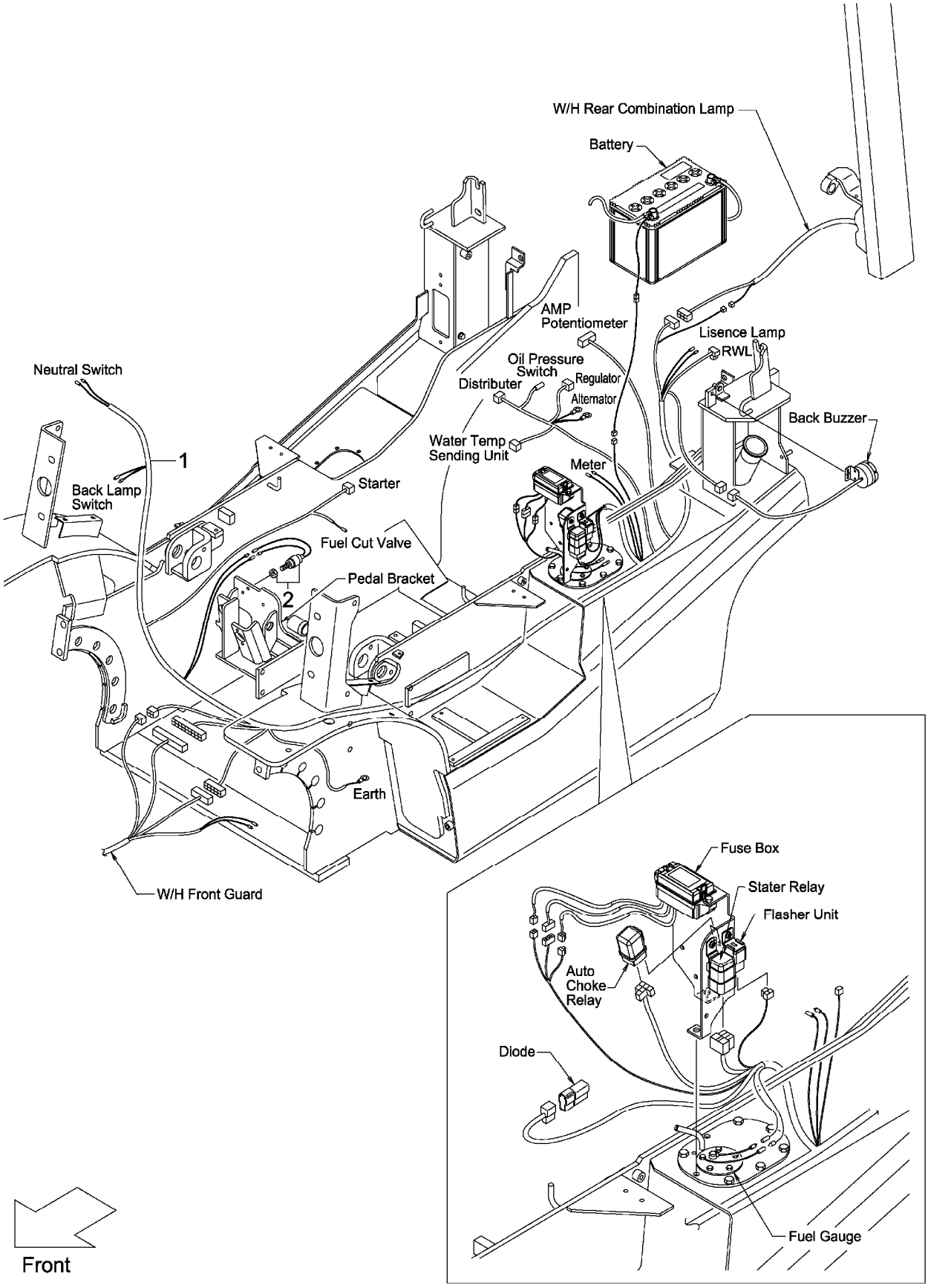

FIG.35

(F70324A0)

A:FG30C3 FG30W3

Item No	Part No.	Mark	Description	Req'd	Remarks : Serial No.
1	22B42-42212		WIRE-HARNESS,ENGINE ﾜｲﾔﾊｰﾈｽ	1	
-	52B43-72001		WIRE-HARNESS,ENGINE ﾜｲﾔﾊｰﾈｽ	1	[FC]
2	23232-42072		SWITCH,STOP-LAMP ｽｲｯﾁ	1	

FIG.36 ENGINE WIRE HARNESS (GASOLINE:TOR-CON)

(F70324B0) エンジンワイヤハーネス

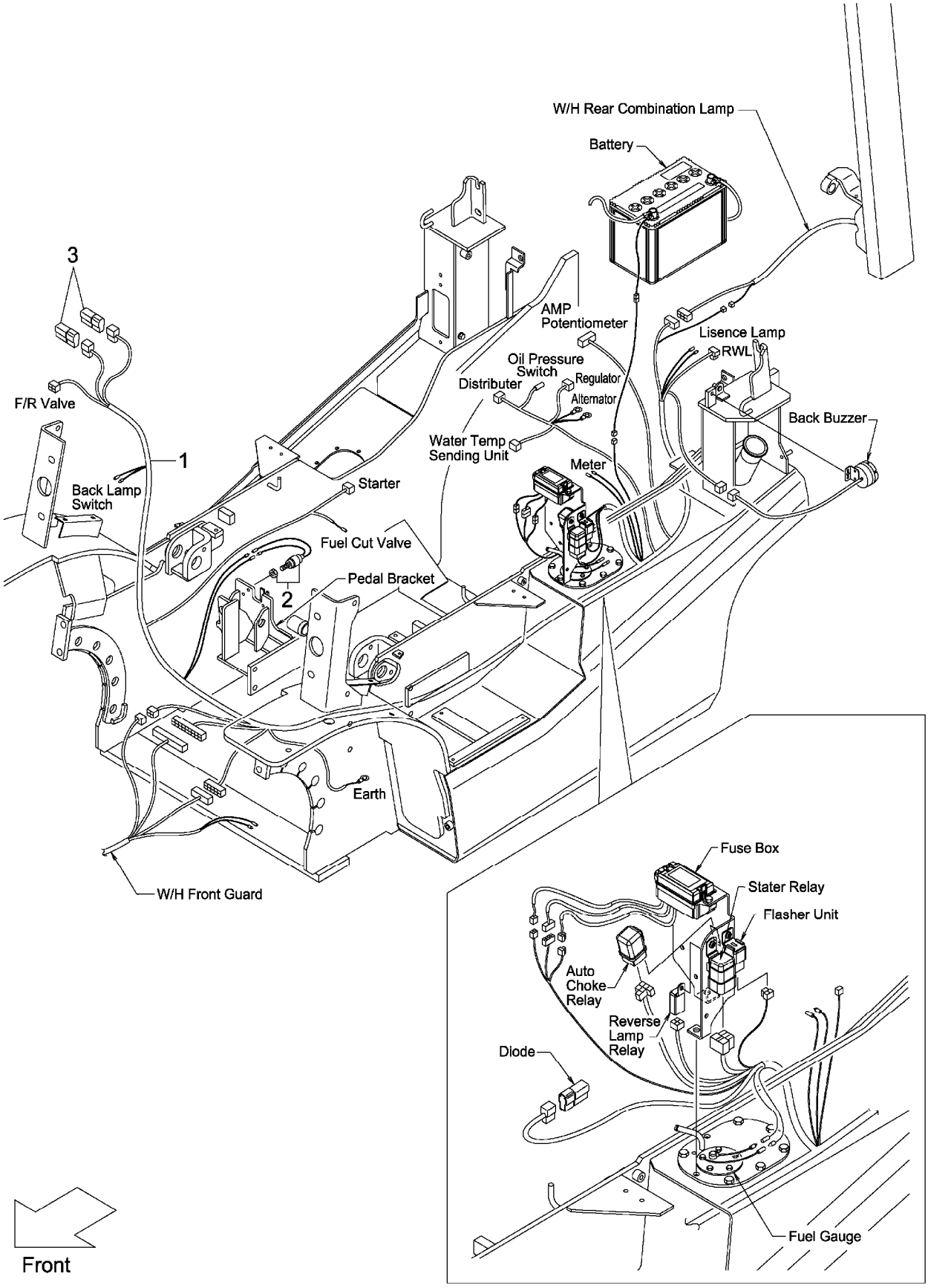

FIG.36

(F70324B0)

A:FG30T3

Item No	Part No.	Mark	Description	Req'd	Remarks : Serial No.
1	22B52-42212		WIRE-HARNESS,ENGINE ﾜｲﾔﾊｰﾈｽ	1	
-	52B53-72001		WIRE-HARNESS,ENGINE ﾜｲﾔﾊｰﾈｽ	1	[FC]
2	23232-42072		SWITCH,STOP-LAMP ｽｲｯﾁ	1	
3	230C2-42201		DIODE,3A ﾀﾞｲｵｰﾄﾞ	2	

ENGINE WIRE HARNESS
FIG.37 (DIESEL:CLUTCH & OIL CLUTCH)

(F70324C0) エンジンワイヤハーネス

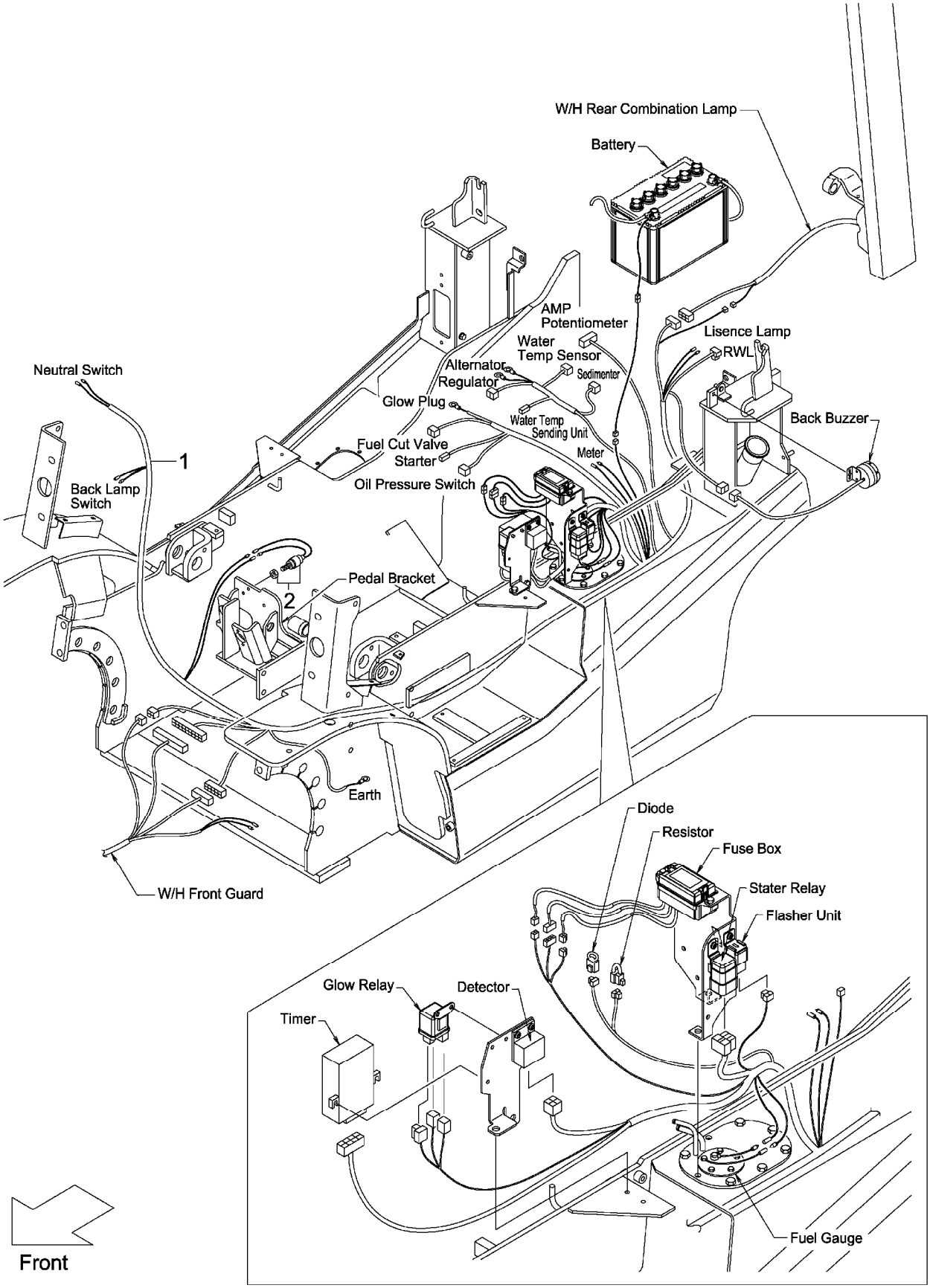

FIG.37

(F70324C0)

A:FD30C3 FD30W3

Item No	Part No.	Mark	Description	Req'd	Remarks : Serial No.
1	22N42-42212		WIRE-HARNESS,ENGINE ﾜｲﾔﾊｰﾈｽ	1	
-	52N43-72001		WIRE-HARNESS,ENGINE ﾜｲﾔﾊｰﾈｽ	1	[FC]
2	23232-42072		SWITCH,STOP-LAMP ｽｲｯﾁ	1	

FIG.38 ENGINE WIRE HARNESS (DIESEL:TOR-CON)

(F70324D0) エンジンワイヤハーネス

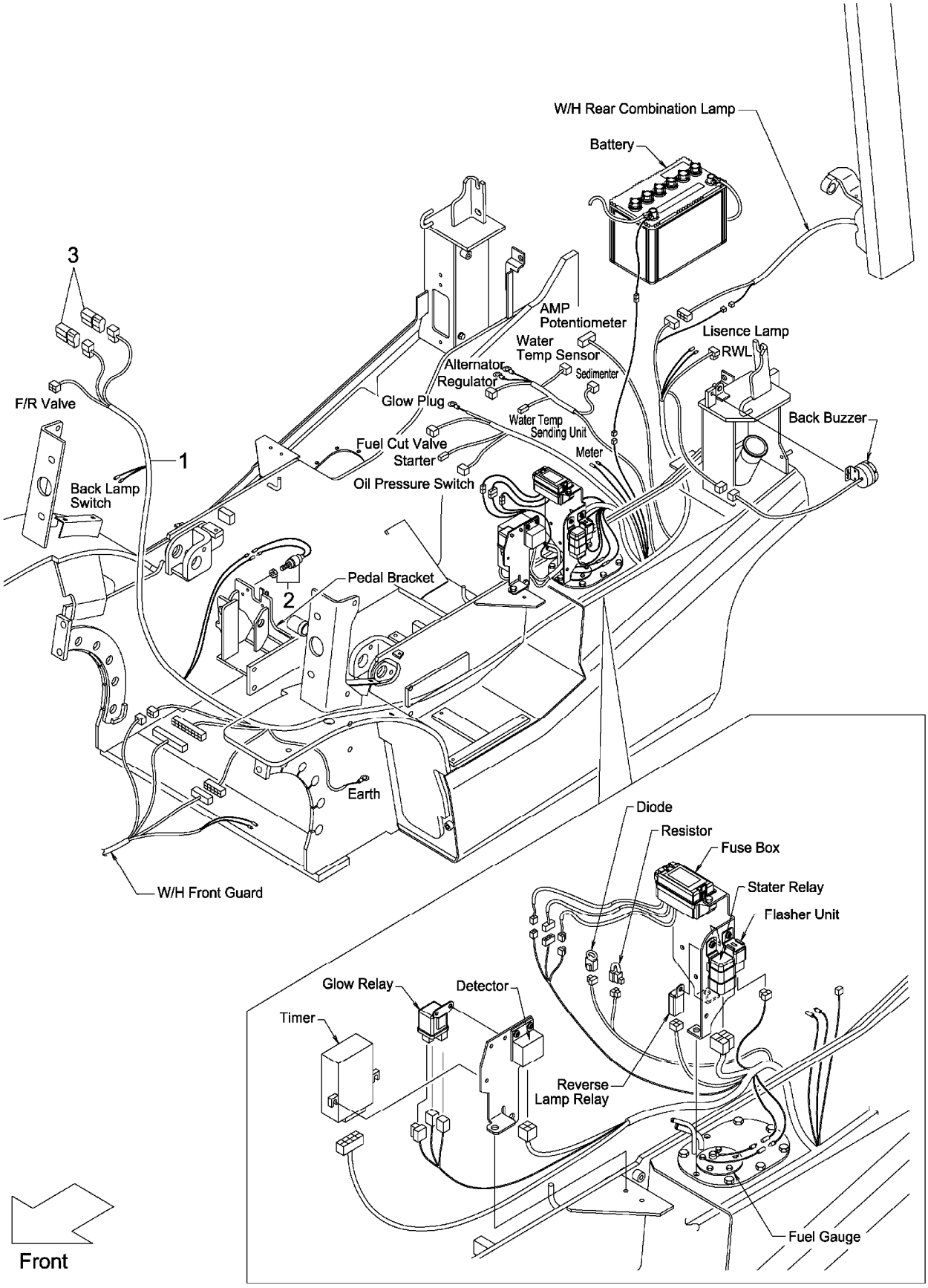

A:FD30T3

Item No	Part No.	Mark	Description	Req'd	Remarks : Serial No.
1	22N52-42212		WIRE-HARNESS,ENGINE ﾜｲﾔﾊｰﾈｽ	1	
-	52N53-72001		WIRE-HARNESS,ENGINE ﾜｲﾔﾊｰﾈｽ	1	[FC]
2	23232-42072		SWITCH,STOP-LAMP ｽｲｯﾁ	1	
3	230C2-42201		DIODE,3A ﾀﾞｲｵｰﾄﾞ	2	

FIG.39 BATTERY (GASOLINE)

(F70324E0) ﾊﾞｯﾃﾘ

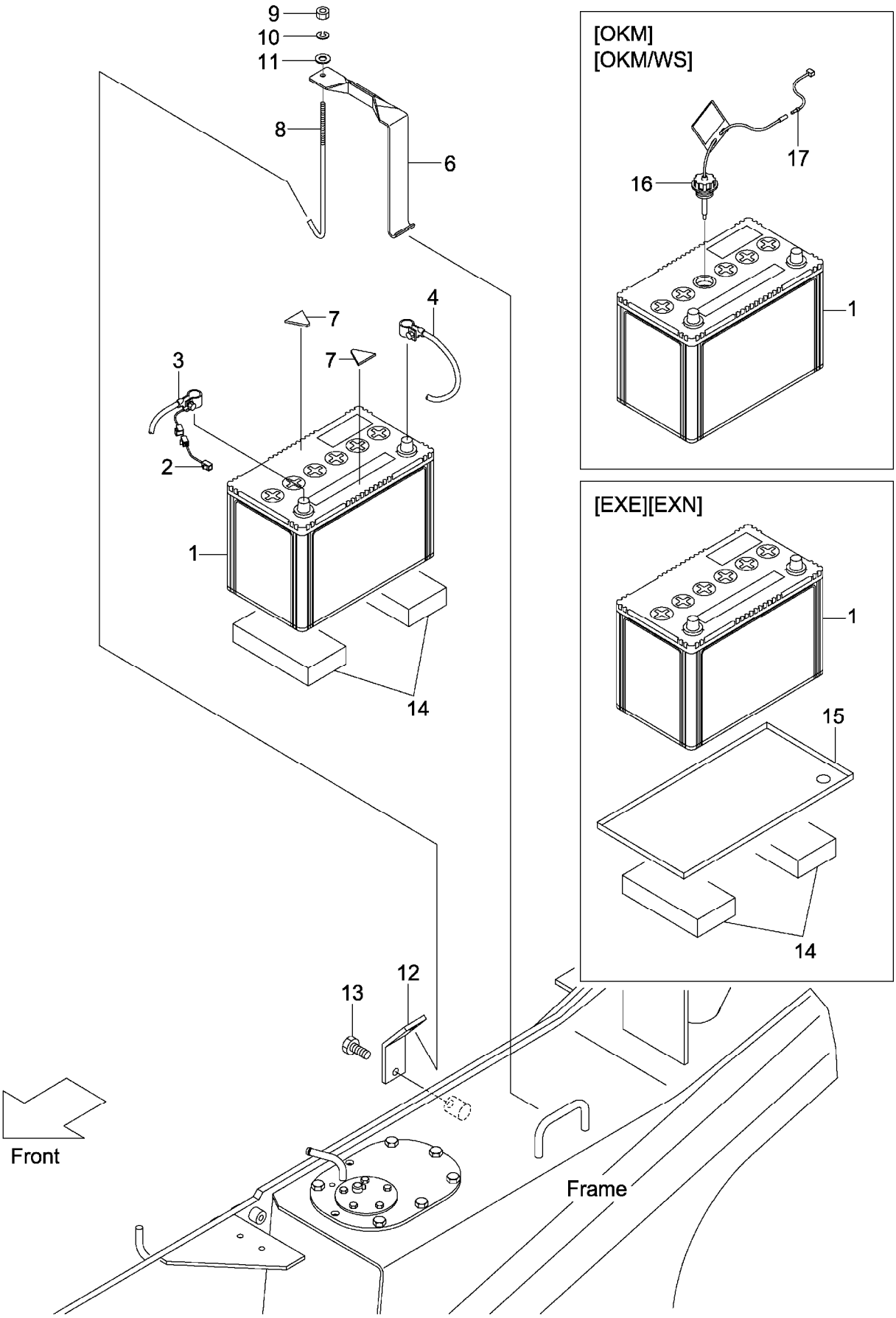

A:FG30C3
B:FG30T3
C:FG30W3

FIG.39
(F70324E0)

Item No	Part No.	Mark	Description		Req'd	Remarks : Serial No.
1	225R2-42001		BATTERY,WET,55B24R	ﾊﾞｯﾃﾘ	1	
-	217G2-42051		BATTERY,WET,65D23R	ﾊﾞｯﾃﾘ	1	[WS]
2	25592-42081		WIRE,FUSIBLE-LINK	ﾜｲﾔ	1	
3	22B52-42221		CABLE,BATTERY(+)	ｹｰﾌﾞﾙ	1	
-	22S52-42221		CABLE,BATTERY(+)	ｹｰﾌﾞﾙ	1	[WS]
4	212T2-42311		CABLE,BATTERY(-)	ｹｰﾌﾞﾙ	1	
-	54612-72281		CABLE,BATTERY(-)	ｹｰﾌﾞﾙ	1	[WS]
-	536G3-82201		CABLE,BATTERY(-)	ｹｰﾌﾞﾙ	1	B [EXE][EXN]
5	516G3-82521	+	TERMINAL,BATTERY	ﾀｰﾐﾅﾙ	1	B [EXE][EXN]
6	216G2-42071		HOLDER,BATTERY	ﾎﾙﾀﾞ	1	
-	217G2-42021		HOLDER,BATTERY	ﾎﾙﾀﾞ	1	[WS]
7	216G2-43111		RUBBER	ﾗﾊﾞｰ	2	
8	256C2-42231		BOLT,ANCHOR	ﾎﾞﾙﾄ	1	
9	01420-00006		NUT	ﾅｯﾄ	1	(-2005.7.4)
-	01400-00006		NUT	ﾅｯﾄ	1	(2005.7.5-)
10	02010-00006		WASHER	ﾜｯｼｬ	1	
11	23452-42181		WASHER	ﾜｯｼｬ	1	(-2005.7.4)
-	02000-00006		WASHER	ﾜｯｼｬ	1	(2005.7.5-)
12	22B52-42111		HOOK,ANCHOR-BOLT	ﾌｯｸ	1	
-	22N52-42111		HOOK,ANCHOR-BOLT	ﾌｯｸ	1	[WS]
13	01185-08016		BOLT	ﾎﾞﾙﾄ	1	
14	22N52-42301		RUBBER	ﾗﾊﾞｰ	2	
15	518G2-72121		CASE,BATTERY	ｹｰｽ	1	B [EXE][EXN]
16	522A7-12211		CAP,BATTERY	ｷｬｯﾌﾟ	1	[OKM]
-	521A2-42001		CAP,BATTERY	ｷｬｯﾌﾟ	1	[OKM/WS]
17	539A6-22021		WIRE,LEAD	ﾜｲﾔ	1	[OKM][OKM/WS]

FIG.40 BATTERY (DIESEL)

(F70324F0) ﾊﾞｯﾃﾘ

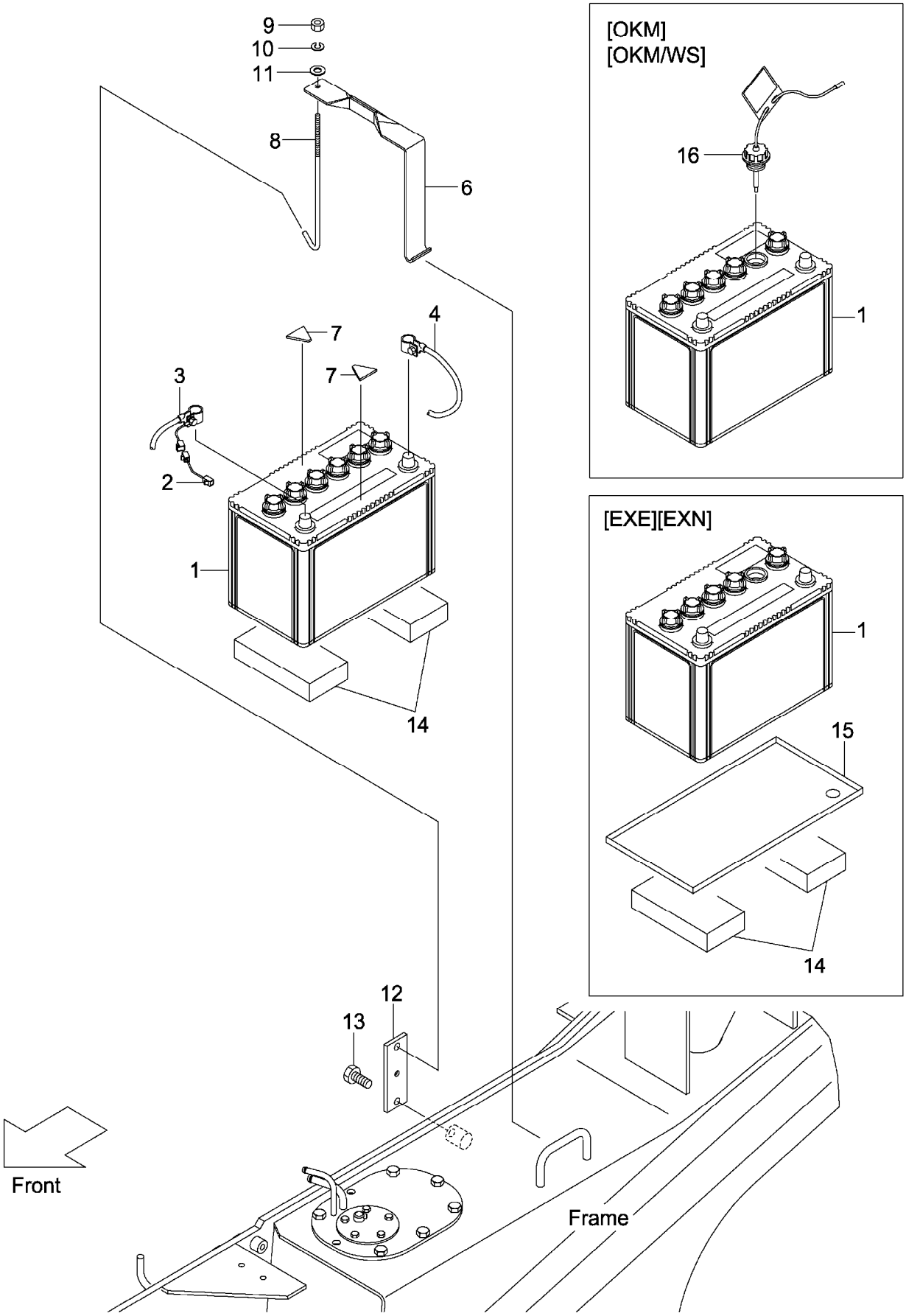

A:FD30C3
B:FD30T3
C:FD30W3

FIG.40
(F70324F0)

Item No	Part No.	Mark	Description		Req'd	Remarks : Serial No.
1	230C2-42301		BATTERY,WET,95D31R	ﾊﾞｯﾃﾘ	1	
-	534A7-02001		BATTERY,WET,115D31R	ﾊﾞｯﾃﾘ	1	[WS]
2	25592-42081		WIRE,FUSIBLE-LINK	ﾜｲﾔ	1	
3	242F2-42151		CABLE,BATTERY(+)	ｹｰﾌﾞﾙ	1	1-126
-	22N52-42221		CABLE,BATTERY(+)	ｹｰﾌﾞﾙ	1	127-358
-	242F2-42151		CABLE,BATTERY(+)	ｹｰﾌﾞﾙ	1	359-
4	238A2-42151		CABLE,BATTERY(-)	ｹｰﾌﾞﾙ	1	
-	538G3-82201		CABLE,BATTERY(-)	ｹｰﾌﾞﾙ	1	B [EXE][EXN]
5	530C3-82361	+	TERMINAL,BATTERY	ﾀｰﾐﾅﾙ	1	B [EXE][EXN]
6	217G2-42021		HOLDER,BATTERY	ﾎﾙﾀﾞ	1	
7	216G2-43111		RUBBER	ﾗﾊﾞｰ	2	
8	256C2-42231		BOLT,ANCHOR	ﾎﾞﾙﾄ	1	
9	01420-00006		NUT	ﾅｯﾄ	1	(-2005.7.4)
-	01400-00006		NUT	ﾅｯﾄ	1	(2005.7.5-)
10	02010-00006		WASHER	ﾜｯｼｬ	1	
11	23452-42181		WASHER	ﾜｯｼｬ	1	(-2005.7.4)
-	02000-00006		WASHER	ﾜｯｼｬ	1	(2005.7.5-)
12	22N52-42111		HOOK,ANCHOR-BOLT	ﾌｯｸ	1	
13	01185-08016		BOLT	ﾎﾞﾙﾄ	1	
14	22N52-42301		RUBBER	ﾗﾊﾞｰ	2	
15	539A2-72121		CASE,BATTERY	ｹｰｽ	1	B [EXE][EXN]
16	522A2-42001		CAP,BATTERY	ｷｬｯﾌﾟ	1	[OKM][OKM/WS]

FIG.41 HEAD LAMP & FRONT COMBINATION LAMP

(F70324G0) ﾍｯﾄﾞﾗﾝﾌﾟ&ﾌﾛﾝﾄｺﾝﾋﾞﾈｰｼｮﾝﾗﾝﾌﾟ

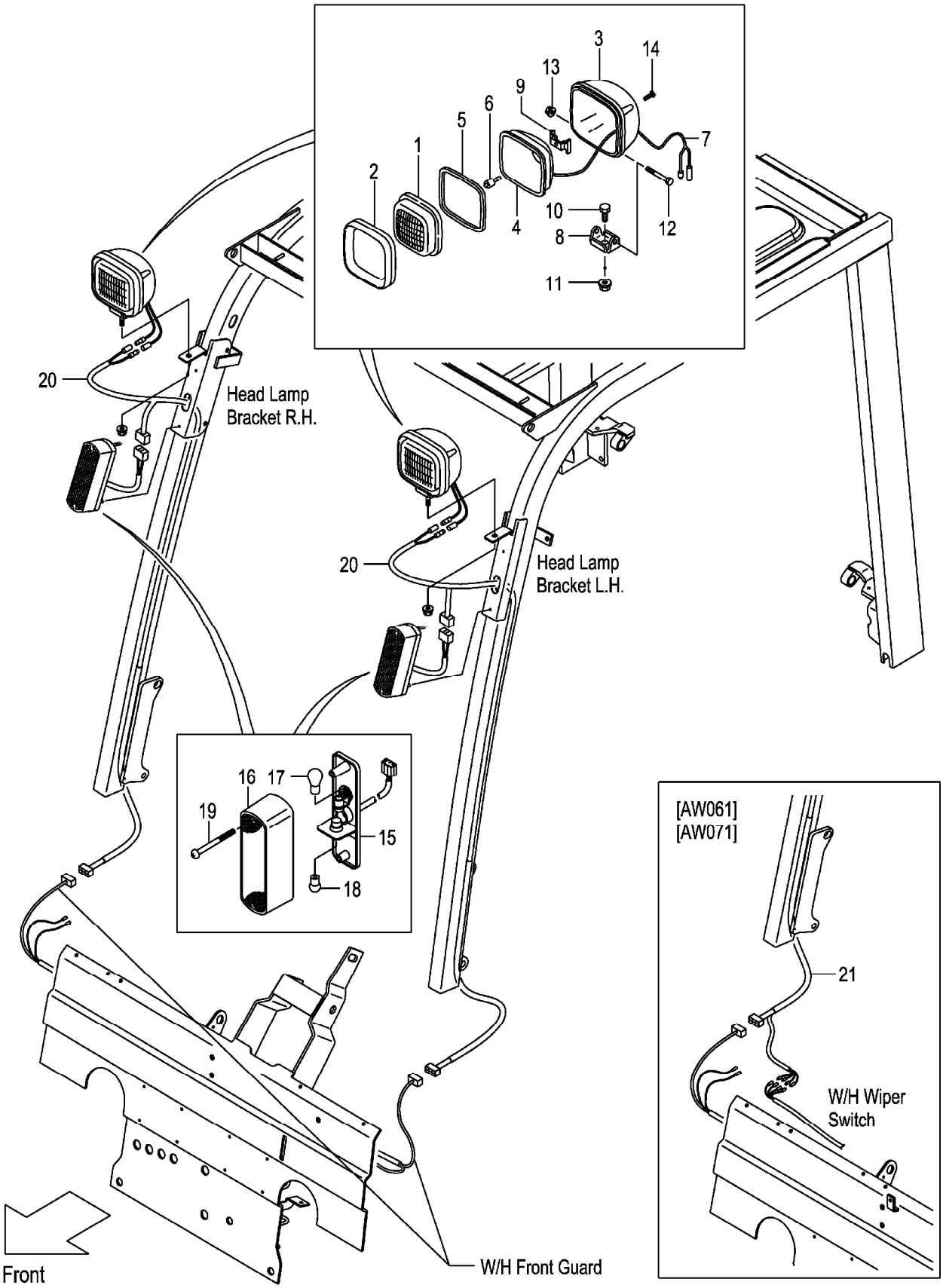

A:FG30C3 FG30T3 FG30W3
B:FD30C3 FD30T3 FD30W3

Item No	Part No.	Mark	Description		Req'd	Remarks : Serial No.
A1	216G2-40602		LAMP-ASSY,HEAD	ﾍｯﾄﾞﾗﾝﾌﾟｱｯｾﾝ	2	INC.1-14
1	216G2-43502		LENS	ﾚﾝｽﾞ	2	
2	216G2-43631		RIM	ﾘﾑ	2	
3	NO PART NO.	#	HOUSING	ﾊｳｼﾞﾝｸﾞ	2	
4	NO PART NO.	#	REFLECTOR	ﾘﾌﾚｸﾀ	2	
5	216G2-43531		GASKET	ｶﾞｽｹｯﾄ	2	
6	216G2-43542		BULB,12V/55W	ﾊﾞﾙﾌﾞ	2	
7	216G2-43551		WIRE,LEAD	ﾜｲﾔ	2	
8	216G2-43562		BRACKET	ﾌﾞﾗｹｯﾄ	2	
9	216G2-43571		SPRING	ｽﾌﾟﾘﾝｸﾞ	2	
10	216G2-43582		BOLT	ﾎﾞﾙﾄ	2	
11	216G2-43592		NUT	ﾅｯﾄ	2	
12	216G2-43602		BOLT	ﾎﾞﾙﾄ	2	
13	216G2-43611		NUT	ﾅｯﾄ	2	
14	216G2-43622		SCREW	ｽｸﾘｭ	8	
A2	216G2-40701		LAMP-ASSY,FRONT-COMBINATION	ﾌﾛﾝﾄｺﾝﾋﾞﾈｰｼｮﾝﾗﾝﾌﾟｱｯｾﾝ	2	INC.15-19
15	NO PART NO.	#	BODY	ﾎﾞﾃﾞｨ	2	
16	216G2-40731		LENS	ﾚﾝｽﾞ	2	
17	216G2-40711		BULB,12V/27W	ﾊﾞﾙﾌﾞ	2	
18	216G2-40721		BULB,12V/10W	ﾊﾞﾙﾌﾞ	2	
19	NO PART NO.		SCREW	ｽｸﾘｭ	4	
20	239A2-42221		WIRE-HARNESS,H.GUARD	ﾜｲﾔﾊｰﾈｽ	2	
-	534A9-22211		WIRE-HARNESS,H.GUARD	ﾜｲﾔﾊｰﾈｽ	2	[HL][BKH]
-	239A2-42221		WIRE-HARNESS,H.GUARD	ﾜｲﾔﾊｰﾈｽ	1	[AW061][AW071]
21	52N55-42301		WIRE-HARNESS,H.GUARD	ﾜｲﾔﾊｰﾈｽ	1	[AW061][AW071]

FIG.42 REAR COMBINATION LAMP

(F70324H0) ﾘﾔｰｺﾝﾋﾞﾈｰｼｮﾝﾗﾝﾌﾟ

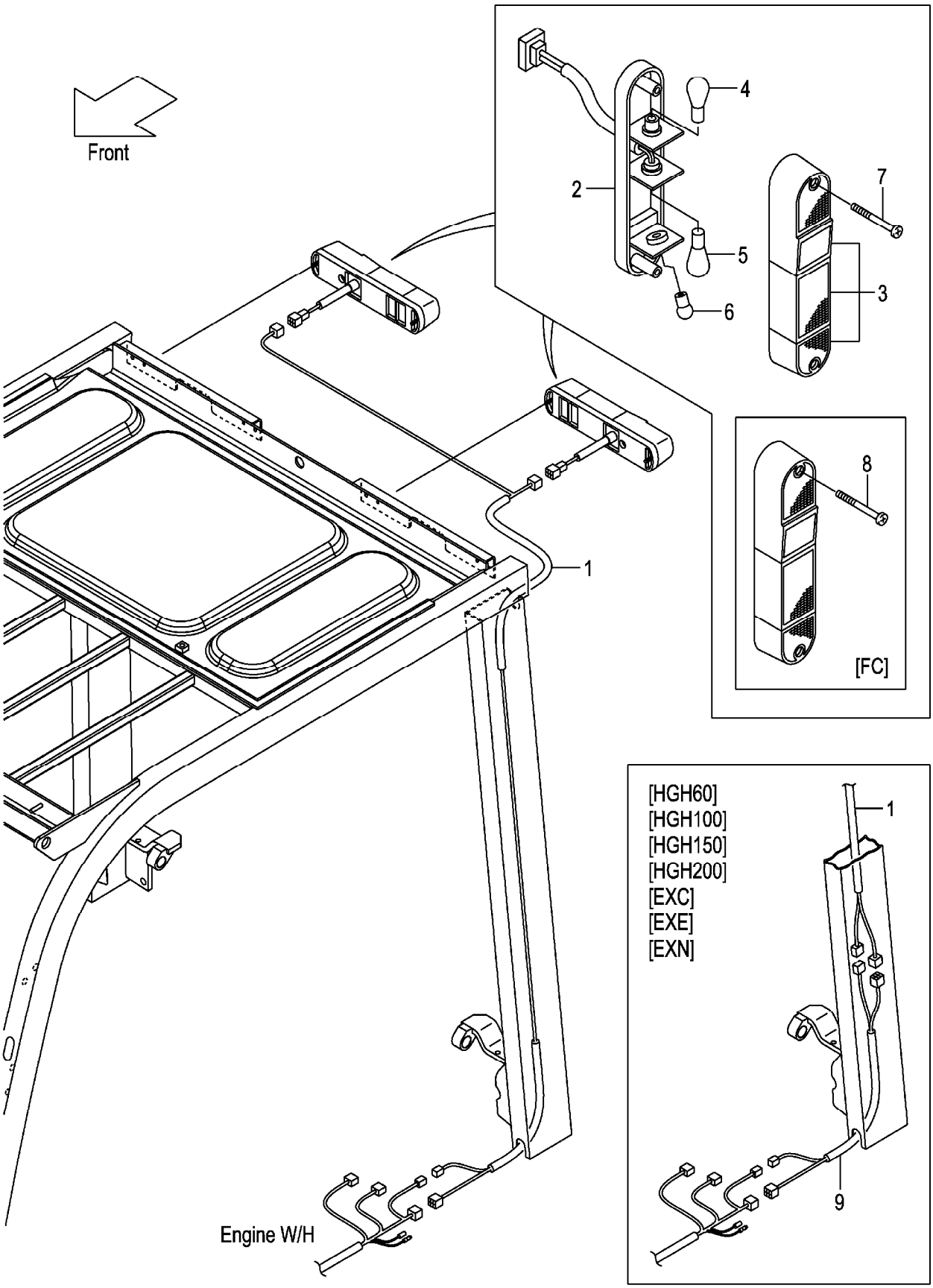

A:FG30C3 FG30T3 C:FD30C3 FD30T3
B:FG30W3 D:FD30W3

Item No	Part No.	Mark	Description	Req'd	Remarks : Serial No.
1	22N52-42251		WIRE-HARNESS,R-COMBINATION ﾜｲﾔﾊｰﾈｽ	1	
A1	209K2-42002		LAMP-ASSY,REAR-COMBINATION ﾘﾔｰｺﾝﾋﾞﾈｰｼｮﾝﾗﾝﾌﾟｱｯｾﾝ	2	INC.2-7
2	NO PART NO.	#	BODY ﾎﾞﾃﾞｨ	2	
3	209K2-42021		LENS,PLASTIC ﾚﾝｽﾞ	2	
4	210F2-42021		BULB,12V/23,8W ﾊﾞﾙﾌﾞ	2	
5	209K2-42041		BULB,12V/27W ﾊﾞﾙﾌﾞ	2	
6	210F2-42031		BULB,12V/10W ﾊﾞﾙﾌﾞ	2	
7	01030-05055		SCREW ｽｸﾘｭ	4	(WITHOUT FC)
8	514A3-72091		BOLT,PAN-HEAD ﾎﾞﾙﾄ	4	[FC]
9	52N55-02451		WIRE-HARNESS,JOINT ﾜｲﾔﾊｰﾈｽ	1	[HGH060][HGH100][HGH150] [HGH200]
-	52N55-02451		WIRE-HARNESS,JOINT ﾜｲﾔﾊｰﾈｽ	1	A,C [EXC][EXE][EXN]

FIG.43 REAR COMBINATION LAMP [RRE][SCB001][SCBCR]

(F70324J0) ﾘﾔｰｺﾝﾋﾞﾈｰｼｮﾝﾗﾝﾌﾟ

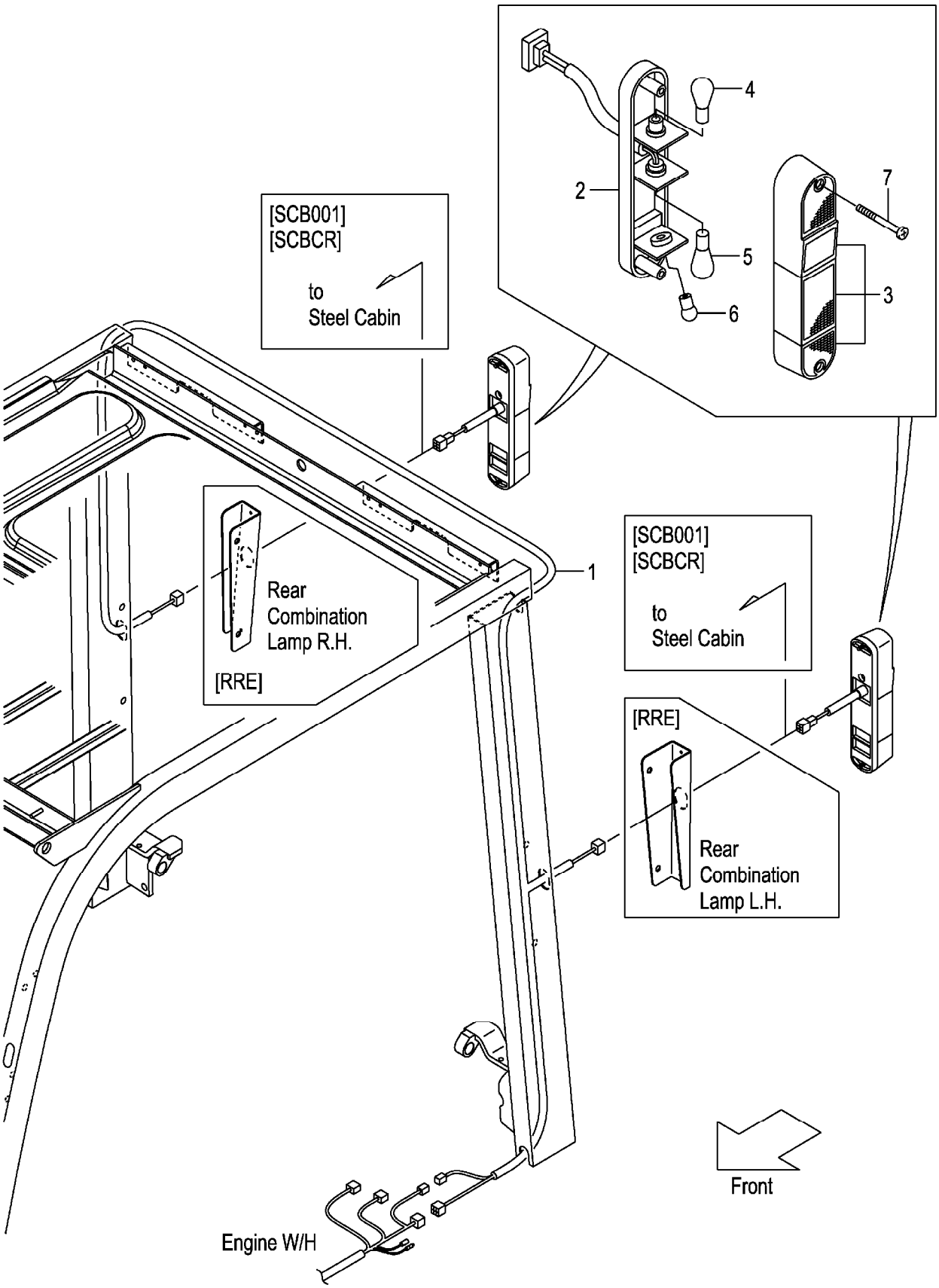

A:FG30C3 FG30T3 C:FD30C3 FD30T3
B:FG30W3 D:FD30W3

Item No	Part No.	Mark	Description	Req'd	Remarks : Serial No.
1	52N59-92201		WIRE-HARNESS,R-COMBINATION ﾜｲﾔﾊｰﾈｽ	1	[RRE]
-	52N59-92201		WIRE-HARNESS,R-COMBINATION ﾜｲﾔﾊｰﾈｽ	1	[SCB001]
-	52N59-92201		WIRE-HARNESS,R-COMBINATION ﾜｲﾔﾊｰﾈｽ	1	A,B,C [SCBCR]
A1	209K2-42002		LAMP-ASSY,REAR-COMBINATION ﾘﾔｰｺﾝﾋﾞﾈｰｼｮﾝﾗﾝﾌﾟｱｯｾﾝ	2	[RRE][SCB001] INC.2-7
-	209K2-42002		LAMP-ASSY,REAR-COMBINATION ﾘﾔｰｺﾝﾋﾞﾈｰｼｮﾝﾗﾝﾌﾟｱｯｾﾝ	2	A,B,C [SCBCR] INC.2-7
2	NO PART NO.	#	BODY ﾎﾞﾃﾞｨ	2	[RRE][SCB001]
-	NO PART NO.	#	BODY ﾎﾞﾃﾞｨ	2	A,B,C [SCBCR]
3	209K2-42021		LENS,PLASTIC ﾚﾝｽﾞ	2	[RRE][SCB001]
-	209K2-42021		LENS,PLASTIC ﾚﾝｽﾞ	2	A,B,C [SCBCR]
4	210F2-42021		BULB,12V/23,8W ﾊﾞﾙﾌﾞ	2	[RRE][SCB001]
-	210F2-42021		BULB,12V/23,8W ﾊﾞﾙﾌﾞ	2	A,B,C [SCBCR]
5	209K2-42041		BULB,12V/27W ﾊﾞﾙﾌﾞ	2	[RRE][SCB001]
-	209K2-42041		BULB,12V/27W ﾊﾞﾙﾌﾞ	2	A,B,C [SCBCR]
6	210F2-42031		BULB,12V/10W ﾊﾞﾙﾌﾞ	2	[RRE][SCB001]
-	210F2-42031		BULB,12V/10W ﾊﾞﾙﾌﾞ	2	A,B,C [SCBCR]
7	01030-05055		SCREW ｽｸﾘｭ	4	[RRE][SCB001]
-	01030-05055		SCREW ｽｸﾘｭ	4	A,B,C [SCBCR]

FIG.44 LICENSE LAMP [RRE]

(F70324K0) ﾗｲｾﾝｽﾗﾝﾌﾟ

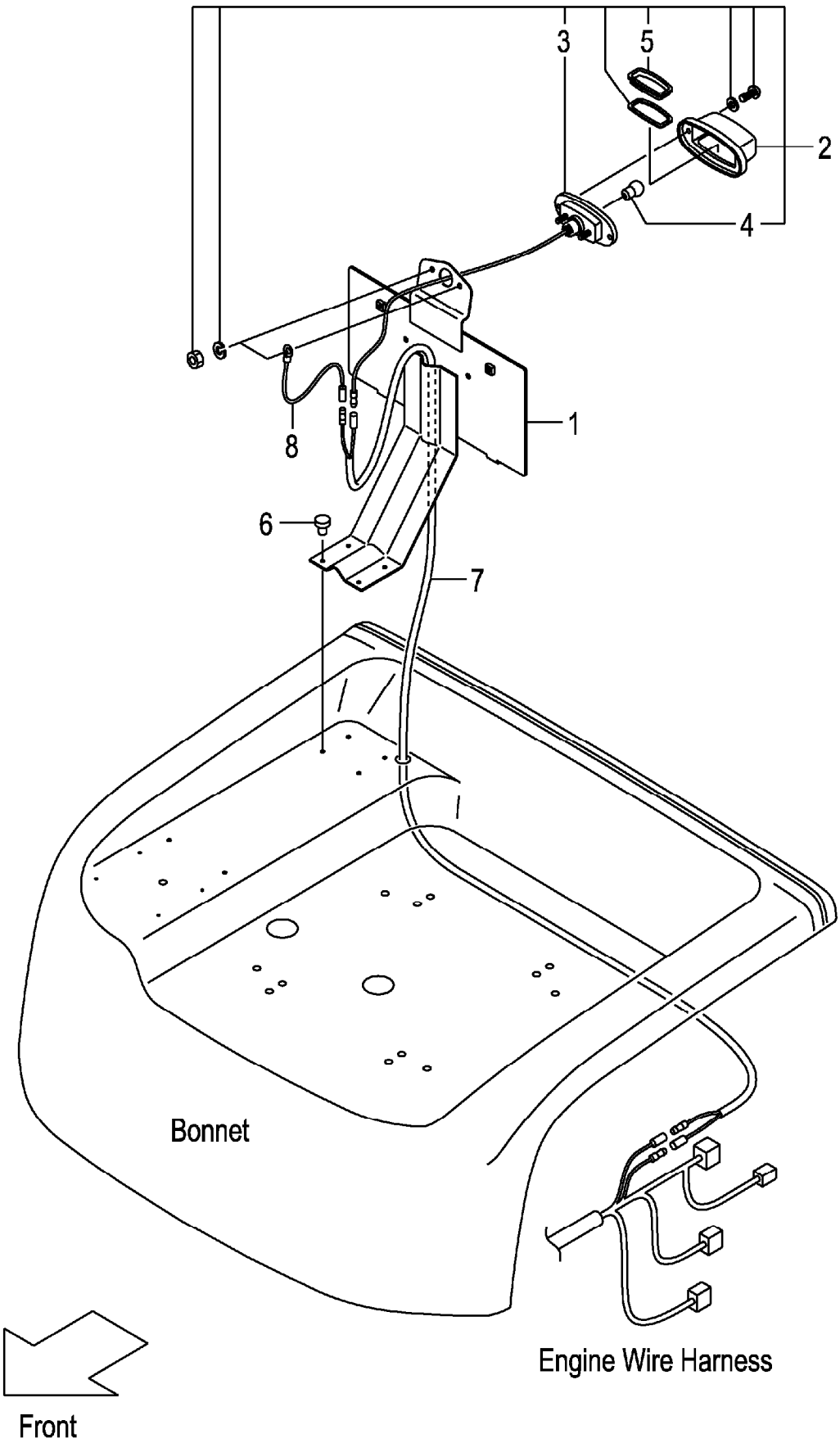

A:FG30C3 FG30T3 FG30W3
B:FD30C3 FD30T3 FD30W3

Item No	Part No.	Mark	Description	Req'd	Remarks : Serial No.
1	52N59-92101		BRACKET,NUMBER-PLATE ﾌﾞﾗｹｯﾄ	1	[RRE]
2	22132-40202		LAMP,LICENCE ﾗﾝﾌﾟ	1	[RRE] INC.3-5
3	NO PART NO.	#	BODY ﾎﾞﾃﾞｨ	1	[RRE]
4	22132-40041		BULB,12V/10W ﾊﾞﾙﾌﾞ	1	[RRE]
5	22192-42411		LENS,PLASTIC ﾚﾝｽﾞ	1	[RRE]
6	22256-42001		RIVET ﾘﾍﾞｯﾄ	4	[RRE]
7	558A9-92001		WIRE-HARNESS,LICENCE ﾜｲﾔﾊｰﾈｽ	1	[RRE]
8	222A2-42511		WIRE,LEAD ﾜｲﾔ	1	[RRE]

FIG.45 LICENSE LAMP [SCB001/RRE][SCBCR/RRE]

(F70324L0) ﾗｲｾﾝｽﾗﾝﾌﾟ

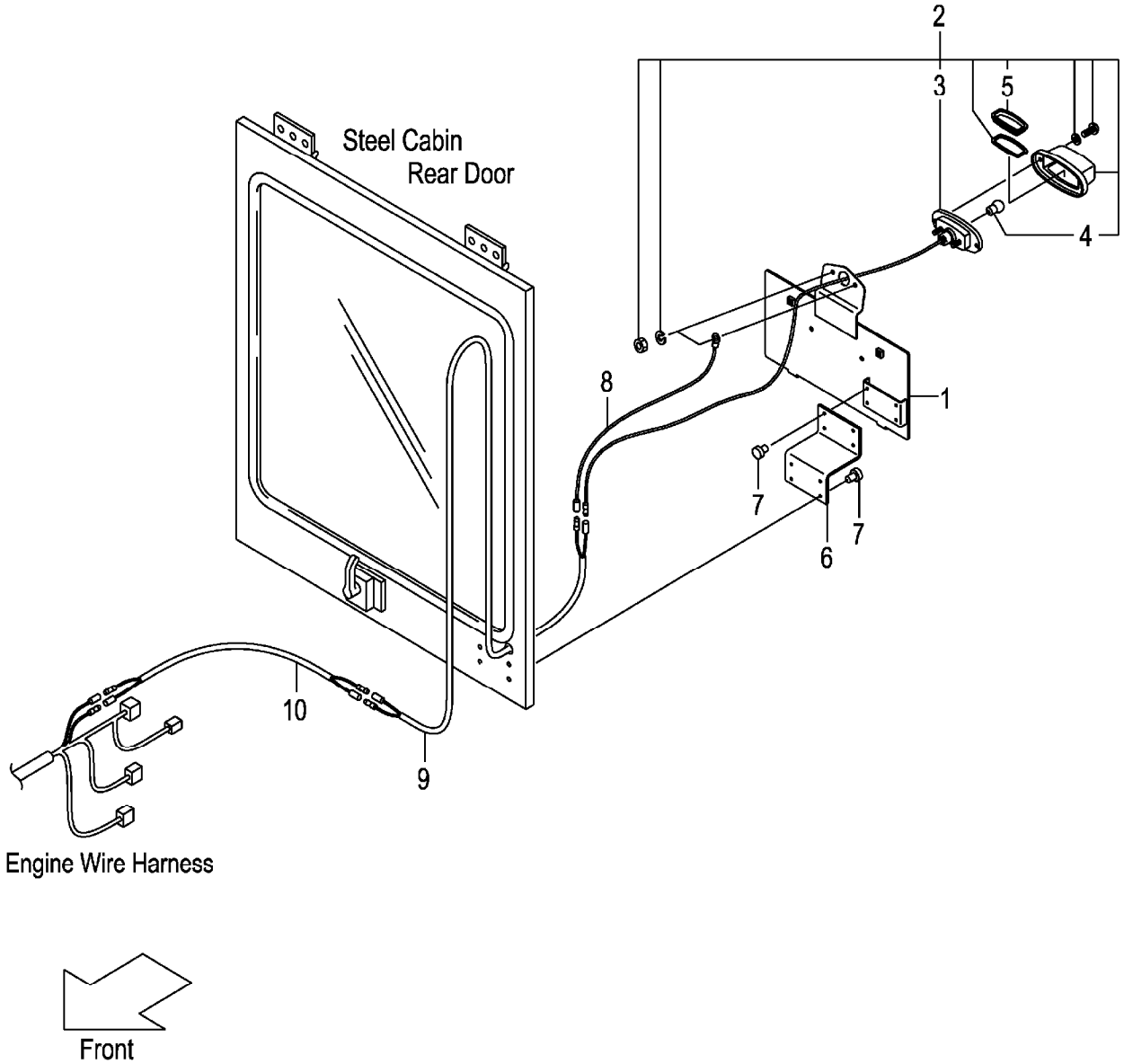

A:FG30C3 FG30T3 C:FD30C3 FD30T3
B:FG30W3 D:FD30W3

Item No	Part No.	Mark	Description		Req'd	Remarks : Serial No.
1	531A0-52521		BRACKET,NUMBER-PLATE	ﾌﾞﾗｹｯﾄ	1	[SCB001/RRE]
-	531A0-52521		BRACKET,NUMBER-PLATE	ﾌﾞﾗｹｯﾄ	1	A,B,C
						[SCBCR/RRE]
2	22132-40202		LAMP,LICENCE	ﾗﾝﾌﾟ	1	[SCB001/RRE] INC.3-5
-	22132-40202		LAMP,LICENCE	ﾗﾝﾌﾟ	1	A,B,C
						[SCBCR/RRE] INC.3-5
3	NO PART NO.	#	BODY	ﾎﾞﾃﾞｨ	1	[SCB001/RRE]
-	NO PART NO.	#	BODY	ﾎﾞﾃﾞｨ	1	A,B,C
						[SCBCR/RRE]
4	22132-40041		BULB,12V/10W	ﾊﾞﾙﾌﾞ	1	[SCB001/RRE]
-	22132-40041		BULB,12V/10W	ﾊﾞﾙﾌﾞ	1	A,B,C
						[SCBCR/RRE]
5	22192-42411		LENS,PLASTIC	ﾚﾝｽﾞ	1	[SCB001/RRE]
-	22192-42411		LENS,PLASTIC	ﾚﾝｽﾞ	1	A,B,C
						[SCBCR/RRE]
6	539A5-32361		BRACKET	ﾌﾞﾗｹｯﾄ	1	[SCB001/RRE]
-	539A5-32361		BRACKET	ﾌﾞﾗｹｯﾄ	1	A,B,C
						[SCBCR/RRE]
7	22256-42001		RIVET	ﾘﾍﾞｯﾄ	8	[SCB001/RRE]
-	22256-42001		RIVET	ﾘﾍﾞｯﾄ	8	A,B,C
						[SCBCR/RRE]
8	222A2-42511		WIRE,LEAD	ﾜｲﾔ	1	[SCB001/RRE]
-	222A2-42511		WIRE,LEAD	ﾜｲﾔ	1	A,B,C
						[SCBCR/RRE]
9	534A9-92131		WIRE-HARNESS,LICENCE	ﾜｲﾔﾊｰﾈｽ	1	[SCB001/RRE]
-	534A9-92131		WIRE-HARNESS,LICENCE	ﾜｲﾔﾊｰﾈｽ	1	A,B,C
						[SCBCR/RRE]
10	558A9-92001		WIRE-HARNESS,LICENCE	ﾜｲﾔﾊｰﾈｽ	1	[SCB001/RRE]
-	558A9-92001		WIRE-HARNESS,LICENCE	ﾜｲﾔﾊｰﾈｽ	1	A,B,C
						[SCBCR/RRE]

FIG.46 LICENSE LAMP [RRE/LPG][RRE/LPO]

(F70324M0) ﾗｲｾﾝｽﾗﾝﾌﾟ

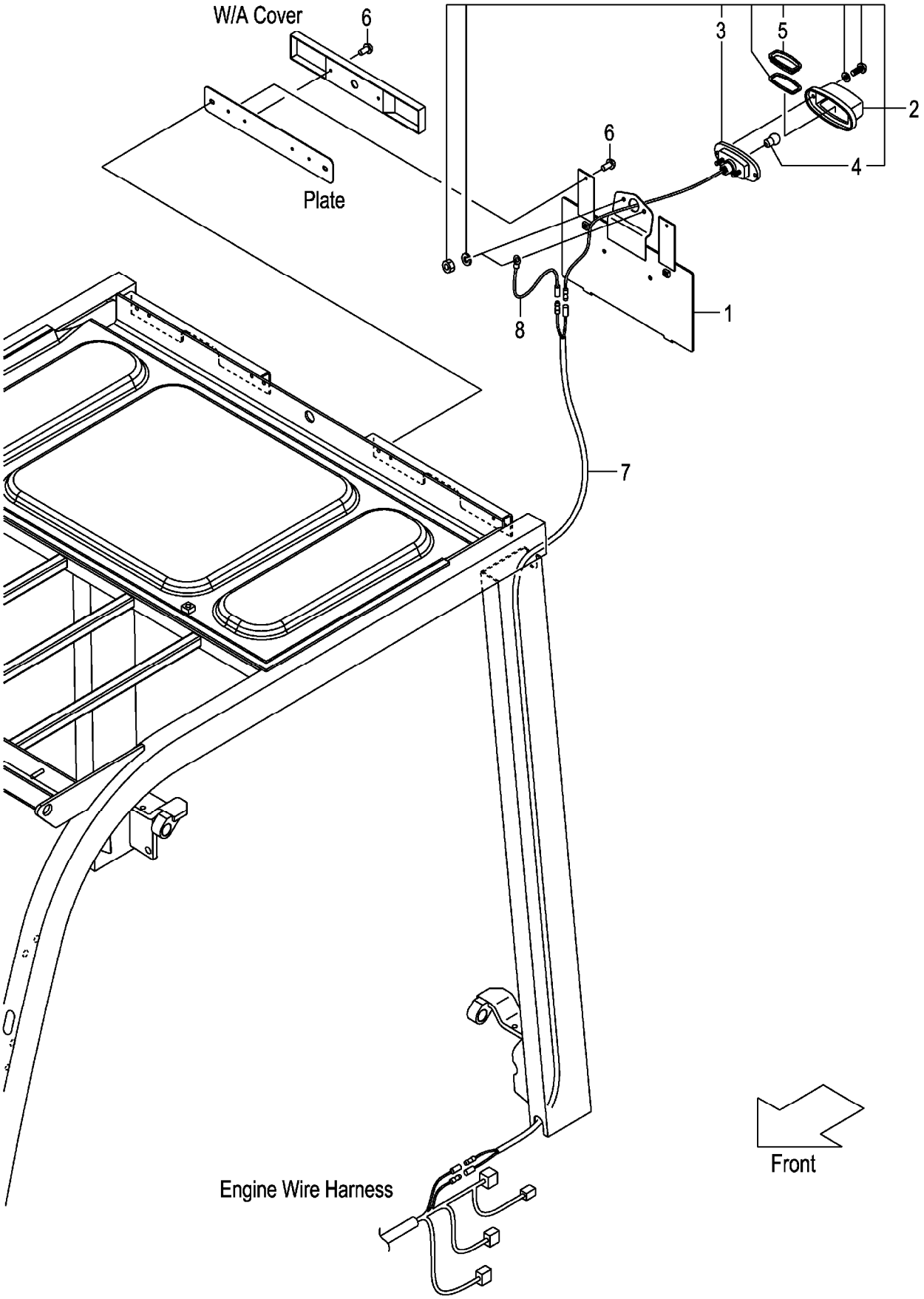

A:FG30C3 FG30T3 FG30W3

Item No	Part No.	Mark	Description	Req'd	Remarks : Serial No.
1	535C9-92011		BRACKET,NUMBER-PLATE ﾌﾞﾗｹｯﾄ	1	[RRE/LPG][RRE/LPO]
2	22132-40202		LAMP,LICENCE ﾗﾝﾌﾟ	1	[RRE/LPG][RRE/LPO] INC.3-5
3	NO PART NO.	#	BODY ﾎﾞﾃﾞｨ	1	[RRE/LPG][RRE/LPO]
4	22132-40041		BULB,12V/10W ﾊﾞﾙﾌﾞ	1	[RRE/LPG][RRE/LPO]
5	22192-42411		LENS,PLASTIC ﾚﾝｽﾞ	1	[RRE/LPG][RRE/LPO]
6	22256-42001		RIVET ﾘﾍﾞｯﾄ	4	[RRE/LPG][RRE/LPO]
7	558A9-92001		WIRE-HARNESS,LICENCE ﾜｲﾔﾊｰﾈｽ	1	[RRE/LPG][RRE/LPO]
8	222A2-42511		WIRE,LEAD ﾜｲﾔ	1	[RRE/LPG][RRE/LPO]

FIG.47 LICENSE LAMP [LP]

(F70324N0) ﾗｲｾﾝｽﾗﾝﾌﾟ

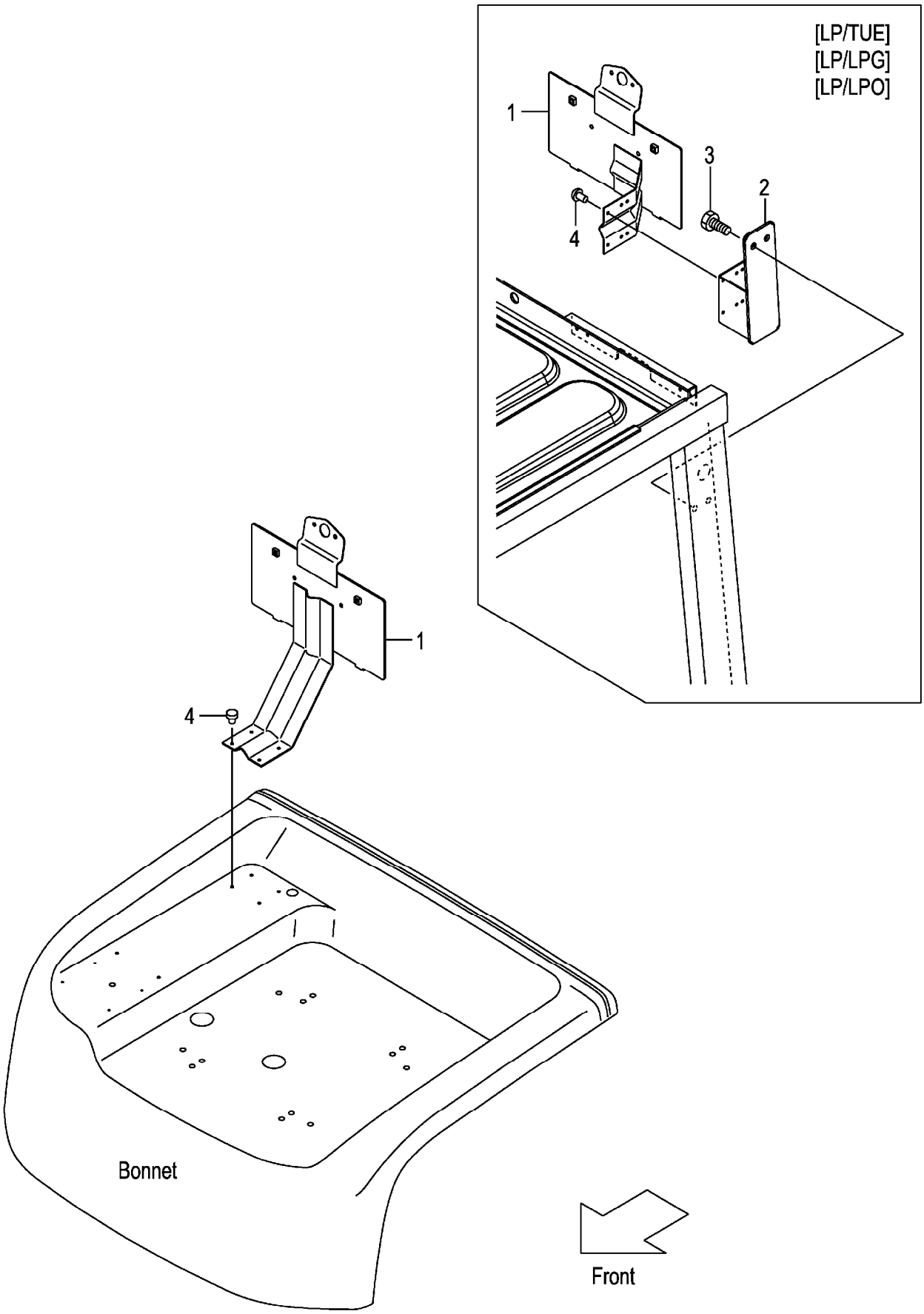

A:FG30C3 FG30T3 FG30W3
B:FD30C3 FD30T3 FD30W3

Item No	Part No.	Mark	Description	Req'd	Remarks : Serial No.
1	52N59-92101		BRACKET,NUMBER-PLATE ﾌﾞﾗｹｯﾄ	1	[LP]
-	509P9-90101		BRACKET,NUMBER-PLATE ﾌﾞﾗｹｯﾄ	1	[LP/TUE]
-	509P9-90101		BRACKET,NUMBER-PLATE ﾌﾞﾗｹｯﾄ	1	A [LP/LPG][LP/LPO]
2	52N59-92501		BRACKET,LP ﾌﾞﾗｹｯﾄ	1	[LP/TUE]
-	52N59-92501		BRACKET,LP ﾌﾞﾗｹｯﾄ	1	A [LP/LPG][LP/LPO]
3	01185-08016		BOLT ﾎﾞﾙﾄ	2	[LP/TUE]
-	01185-08016		BOLT ﾎﾞﾙﾄ	2	A [LP/LPG][LP/LPO]
4	22256-42001		RIVET ﾘﾍﾞｯﾄ	4	[LP]

FIG.48 REAR WORKING LIGHT [RWLR]

(F70324P0) リヤーワーキング゛ライト

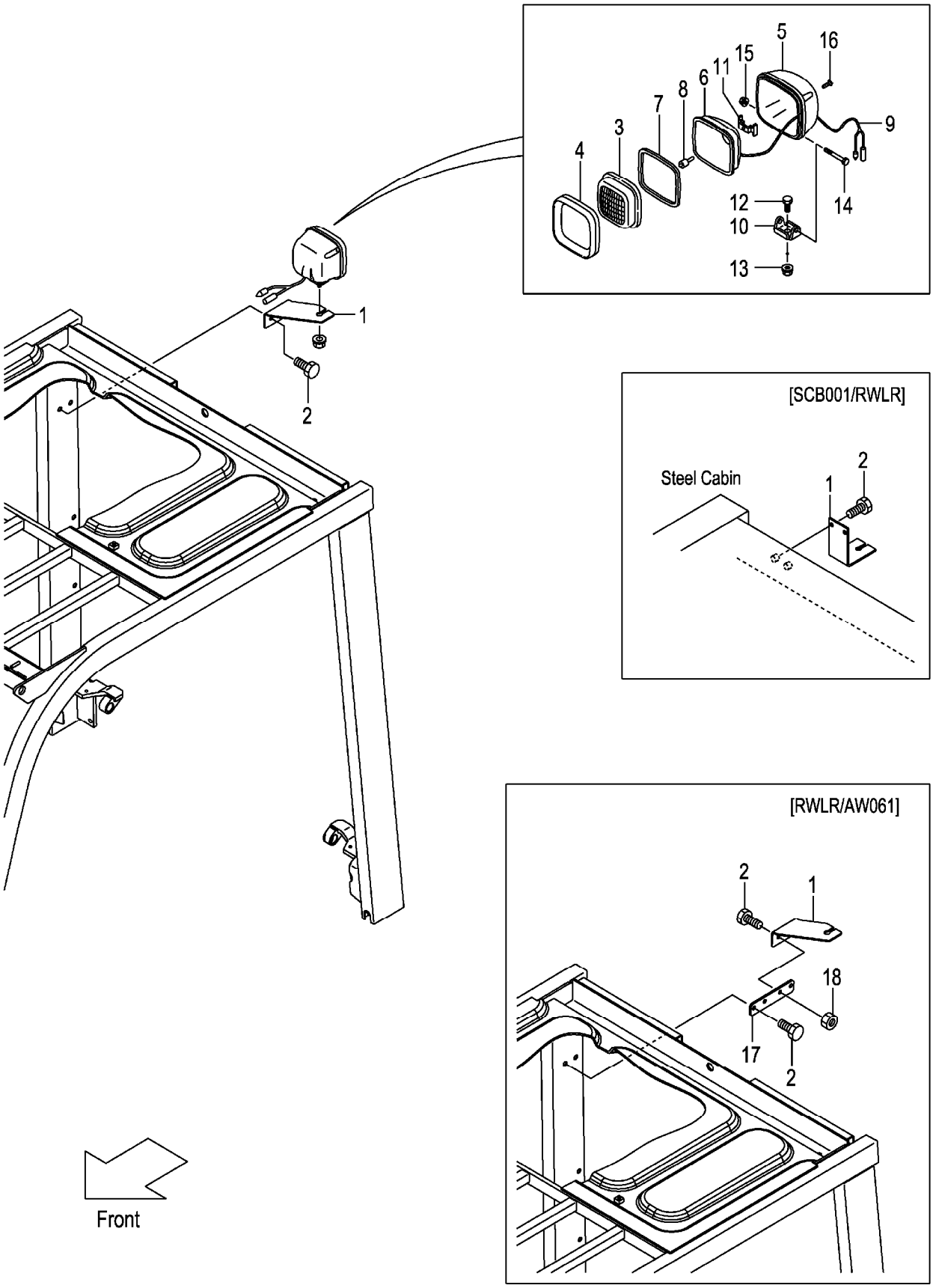

A:FG30C3 FG30T3 FG30W3
B:FD30C3 FD30T3 FD30W3

Item No	Part No.	Mark	Description		Req'd	Remarks : Serial No.
1	52N51-42161		BRACKET,RWL,RH	ﾌﾞﾗｹｯﾄ	1	[RWLR]
-	530C1-42001		BRACKET,RWL	ﾌﾞﾗｹｯﾄ	1	[SCB001/RWLR]
2	01185-08016		BOLT	ﾎﾞﾙﾄ	2	[RWLR]
-	01185-08016		BOLT	ﾎﾞﾙﾄ	4	[RWLR/AW061]
-	01185-08020		BOLT	ﾎﾞﾙﾄ	2	[SCB001/RWLR]
A1	216G2-40602		LAMP-ASSY,HEAD	ﾍｯﾄﾞﾗﾝﾌﾟｱｯｾﾝ	1	[RWLR] INC.3-16
3	216G2-43502		LENS	ﾚﾝｽﾞ	1	[RWLR]
4	216G2-43631		RIM	ﾘﾑ	1	[RWLR]
5	NO PART NO.	#	HOUSING	ﾊｳｼﾞﾝｸﾞ	1	[RWLR]
6	NO PART NO.	#	REFLECTOR	ﾘﾌﾚｸﾀ	1	[RWLR]
7	216G2-43531		GASKET	ｶﾞｽｹｯﾄ	1	[RWLR]
8	216G2-43542		BULB,12V/55W	ﾊﾞﾙﾌﾞ	1	[RWLR]
9	216G2-43551		WIRE,LEAD	ﾜｲﾔ	1	[RWLR]
10	216G2-43562		BRACKET	ﾌﾞﾗｹｯﾄ	1	[RWLR]
11	216G2-43571		SPRING	ｽﾌﾟﾘﾝｸﾞ	1	[RWLR]
12	216G2-43582		BOLT	ﾎﾞﾙﾄ	1	[RWLR]
13	216G2-43592		NUT	ﾅｯﾄ	1	[RWLR]
14	216G2-43602		BOLT	ﾎﾞﾙﾄ	1	[RWLR]
15	216G2-43611		NUT	ﾅｯﾄ	1	[RWLR]
16	216G2-43622		SCREW	ｽｸﾘｭ	4	[RWLR]
17	52N51-42301		PLATE	ﾌﾟﾚｰﾄ	1	[RWLR/AW061]
18	01400-00008		NUT	ﾅｯﾄ	2	[RWLR/AW061]

FIG.49 REAR WORKING LIGHT [RWLL]

(F70324Q0) リヤーワーキング゛ライト

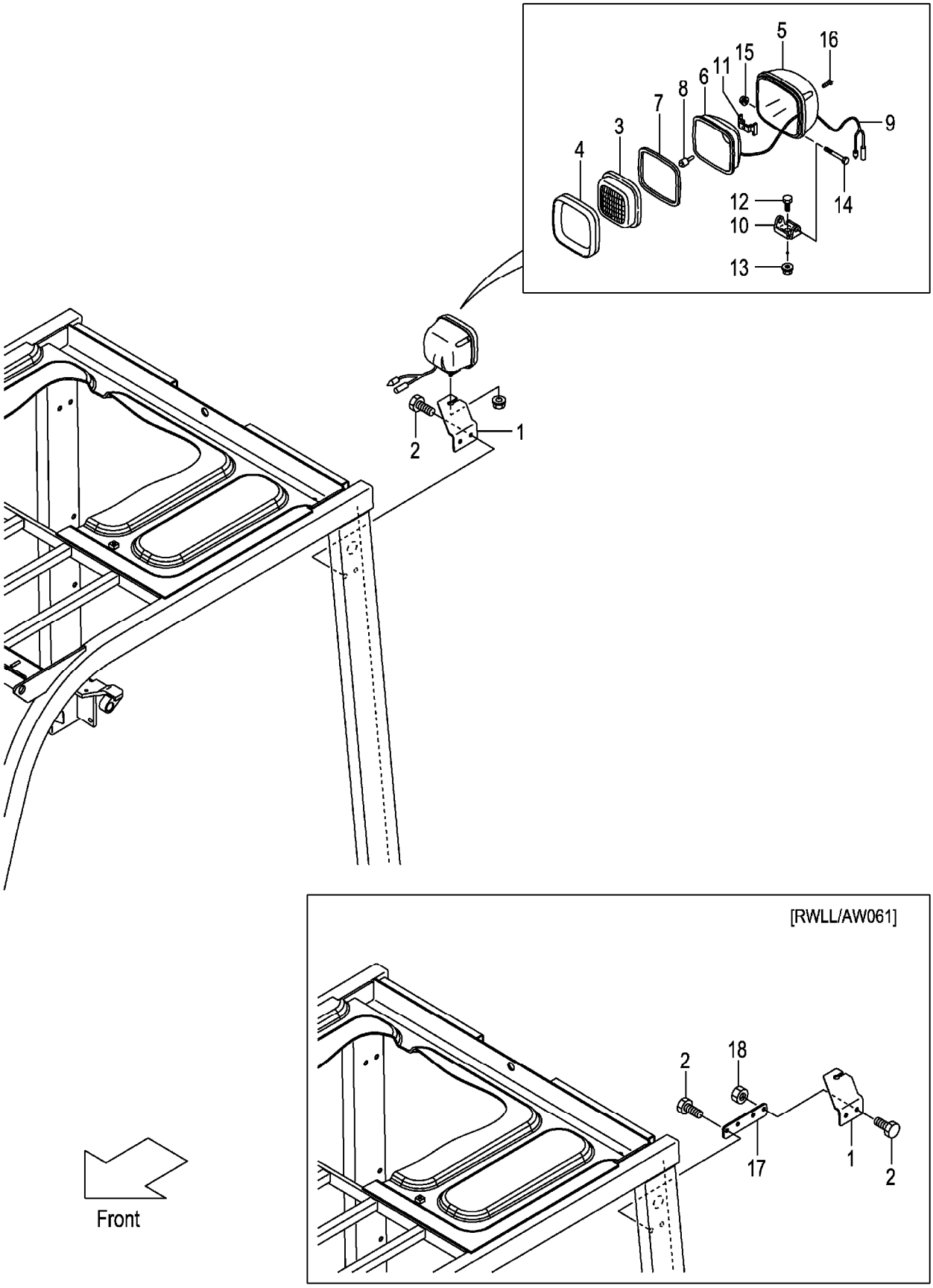

A:FG30C3 FG30T3 FG30W3
B:FD30C3 FD30T3 FD30W3

Item No	Part No.	Mark	Description		Req'd	Remarks : Serial No.
1	52N51-42151		BRACKET,RWL,LH	ﾌﾞﾗｹｯﾄ	1	[RWLL]
2	01185-08016		BOLT	ﾎﾞﾙﾄ	2	[RWLL]
-	01185-08016		BOLT	ﾎﾞﾙﾄ	4	[RWLL/AW061]
A1	216G2-40602		LAMP-ASSY,HEAD	ﾍｯﾄﾞﾗﾝﾌﾟｱｯｾﾝ	1	[RWLL] INC.3-16
3	216G2-43502		LENS	ﾚﾝｽﾞ	1	[RWLL]
4	216G2-43631		RIM	ﾘﾑ	1	[RWLL]
5	NO PART NO.	#	HOUSING	ﾊｳｼﾞﾝｸﾞ	1	[RWLL]
6	NO PART NO.	#	REFLECTOR	ﾘﾌﾚｸﾀ	1	[RWLL]
7	216G2-43531		GASKET	ｶﾞｽｹｯﾄ	1	[RWLL]
8	216G2-43542		BULB,12V/55W	ﾊﾞﾙﾌﾞ	1	[RWLL]
9	216G2-43551		WIRE,LEAD	ﾜｲﾔ	1	[RWLL]
10	216G2-43562		BRACKET	ﾌﾞﾗｹｯﾄ	1	[RWLL]
11	216G2-43571		SPRING	ｽﾌﾟﾘﾝｸﾞ	1	[RWLL]
12	216G2-43582		BOLT	ﾎﾞﾙﾄ	1	[RWLL]
13	216G2-43592		NUT	ﾅｯﾄ	1	[RWLL]
14	216G2-43602		BOLT	ﾎﾞﾙﾄ	1	[RWLL]
15	216G2-43611		NUT	ﾅｯﾄ	1	[RWLL]
16	216G2-43622		SCREW	ｽｸﾘｭ	4	[RWLL]
17	52N51-42301		PLATE	ﾌﾟﾚｰﾄ	1	[RWLL/AW061]
18	01400-00008		NUT	ﾅｯﾄ	2	[RWLL/AW061]

FIG.50 REAR WORKING LIGHT [RWL2]

(F70324R0) リヤーワーキング゛ライト

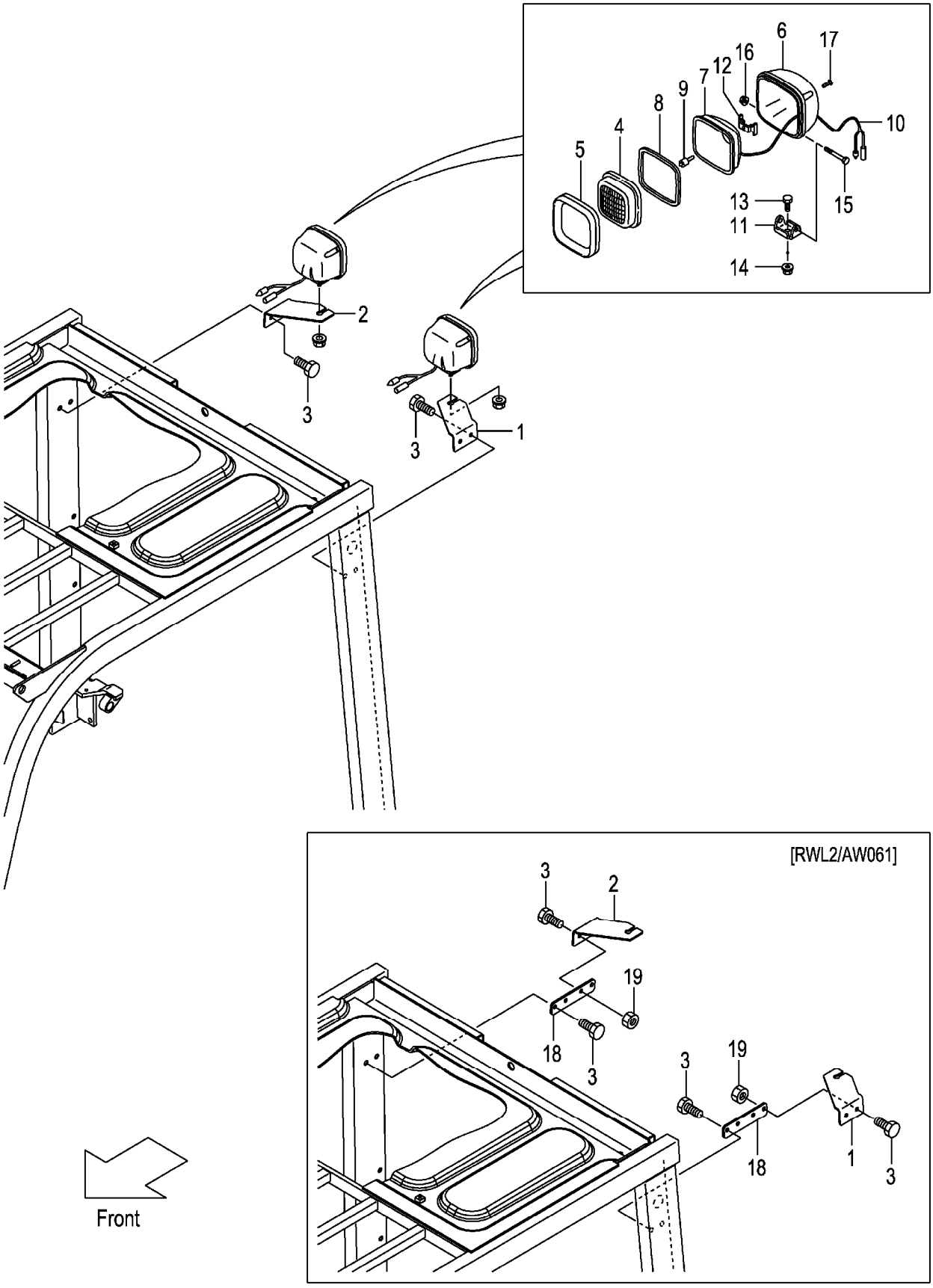

A:FG30C3 FG30T3 FG30W3
B:FD30C3 FD30T3 FD30W3

Item No	Part No.	Mark	Description		Req'd	Remarks : Serial No.
1	52N51-42151		BRACKET,RWL,LH	ﾌﾞﾗｹｯﾄ	1	[RWL2]
2	52N51-42161		BRACKET,RWL,RH	ﾌﾞﾗｹｯﾄ	1	[RWL2]
3	01185-08016		BOLT	ﾎﾞﾙﾄ	4	[RWL2]
-	01185-08016		BOLT	ﾎﾞﾙﾄ	8	[RWL2/AW061]
A1	216G2-40602		LAMP-ASSY,HEAD	ﾍｯﾄﾞﾗﾝﾌﾟｱｯｾﾝ	2	[RWL2] INC.4-17
4	216G2-43502		LENS	ﾚﾝｽﾞ	2	[RWL2]
5	216G2-43631		RIM	ﾘﾑ	2	[RWL2]
6	NO PART NO.	#	HOUSING	ﾊｳｼﾞﾝｸﾞ	2	[RWL2]
7	NO PART NO.	#	REFLECTOR	ﾘﾌﾚｸﾀ	2	[RWL2]
8	216G2-43531		GASKET	ｶﾞｽｹｯﾄ	2	[RWL2]
9	216G2-43542		BULB,12V/55W	ﾊﾞﾙﾌﾞ	2	[RWL2]
10	216G2-43551		WIRE,LEAD	ﾜｲﾔ	2	[RWL2]
11	216G2-43562		BRACKET	ﾌﾞﾗｹｯﾄ	2	[RWL2]
12	216G2-43571		SPRING	ｽﾌﾟﾘﾝｸﾞ	2	[RWL2]
13	216G2-43582		BOLT	ﾎﾞﾙﾄ	2	[RWL2]
14	216G2-43592		NUT	ﾅｯﾄ	2	[RWL2]
15	216G2-43602		BOLT	ﾎﾞﾙﾄ	2	[RWL2]
16	216G2-43611		NUT	ﾅｯﾄ	2	[RWL2]
17	216G2-43622		SCREW	ｽｸﾘｭ	8	[RWL2]
18	52N51-42301		PLATE	ﾌﾟﾚｰﾄ	2	[RWL2/AW061]
19	01400-00008		NUT	ﾅｯﾄ	4	[RWL2/AW061]

FIG.51 REAR WORKING LIGHT WIRE HARNESS [RWL]

(F70324S0) リヤーワーキング゛ライトワイヤハーネス

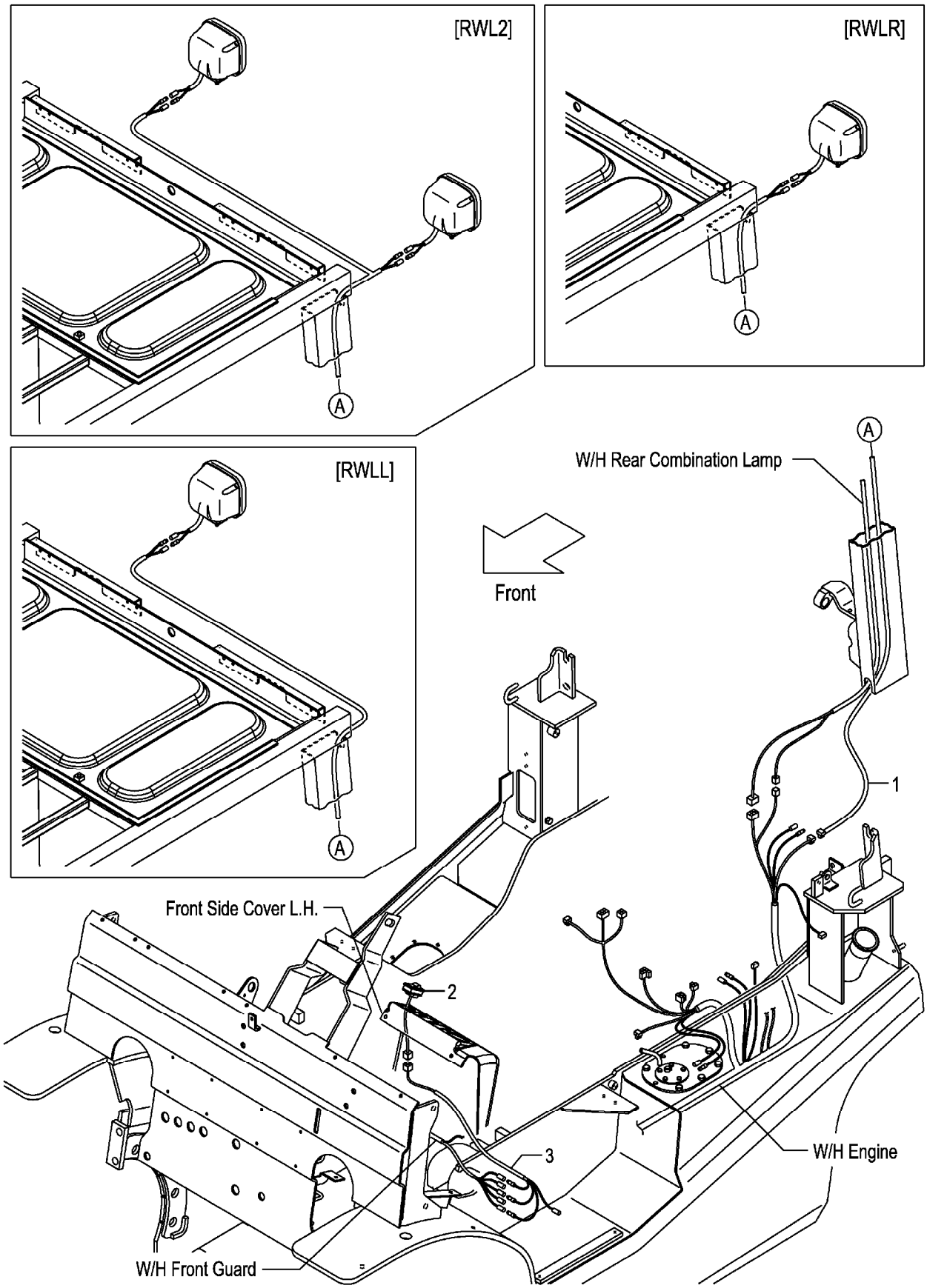

A:FG30C3 FG30T3 FG30W3
B:FD30C3 FD30T3 FD30W3

Item No	Part No.	Mark	Description		Req'd	Remarks : Serial No.
1	52N51-42101		WIRE,LEAD,RWL	ﾜｲﾔ	1	[RWLR]
-	52N51-42111		WIRE,LEAD,RWL	ﾜｲﾔ	1	[RWLL]
-	52N51-42121		WIRE,LEAD,RWL	ﾜｲﾔ	1	[RWL2]
2	52N51-42401		SWITCH,RWL	ｽｲｯﾁ	1	[RWLR][RWLL][RWL2]
3	52N51-42411		WIRE-HARNESS,SWITCH	ﾜｲﾔﾊｰﾈｽ	1	[RWLR][RWLL][RWL2]
-	52N51-42511		WIRE-HARNESS,SWITCH	ﾜｲﾔﾊｰﾈｽ	1	[RWLR/PLR][RWLL/PLR]
						[RWL2/PLR]

FIG.52 REAR WORKING LIGHT WIRE HARNESS [RWL/BBR]

(F70324T0) リヤーワーキング ライトワイヤハーネス

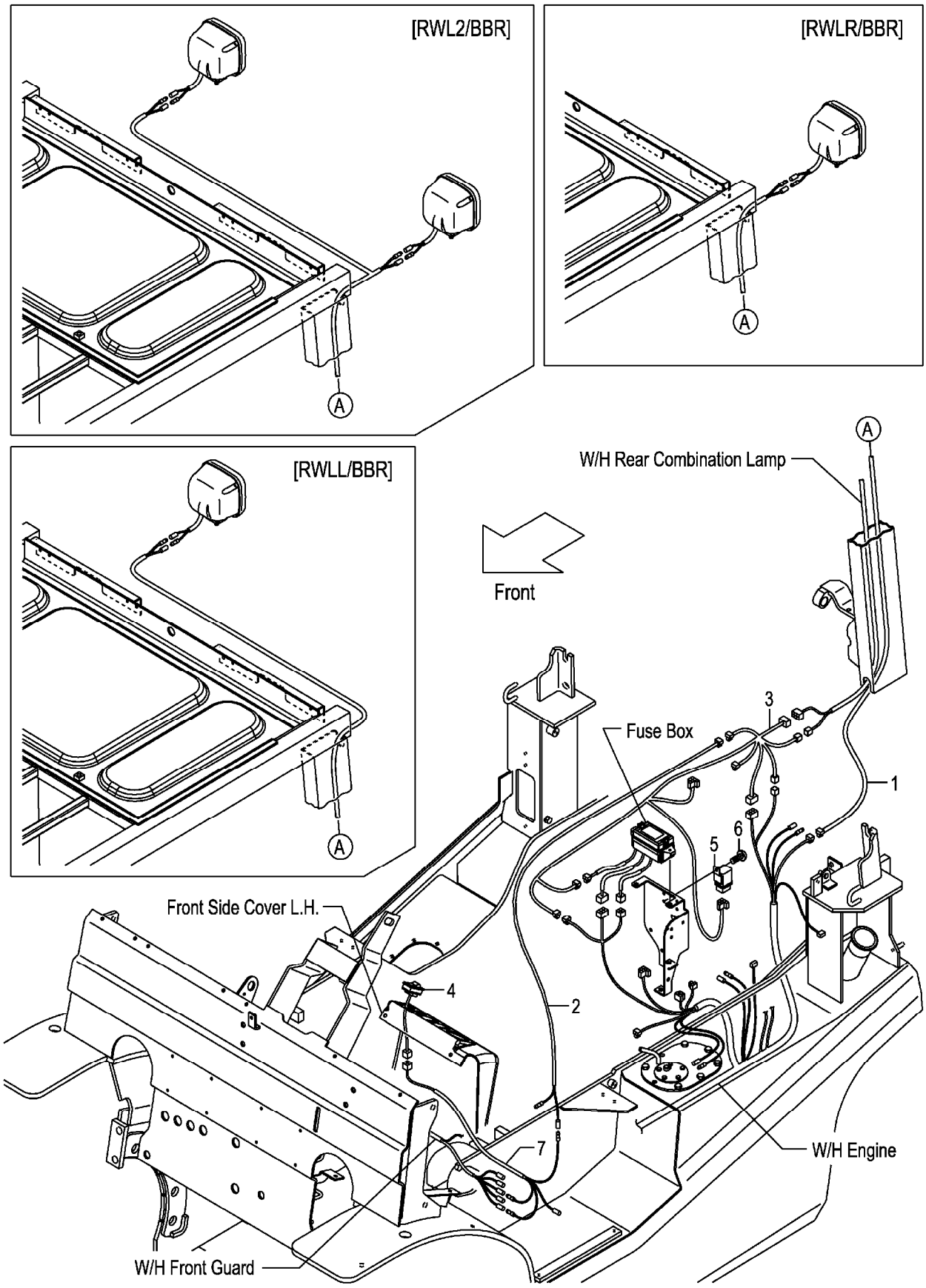

A:FG30C3 FG30T3 FG30W3
B:FD30C3 FD30T3 FD30W3

Item No	Part No.	Mark	Description		Req'd	Remarks : Serial No.
1	52N51-42101		WIRE,LEAD,RWL	ﾜｲﾔ	1	[RWLR/BBR]
-	52N51-42111		WIRE,LEAD,RWL	ﾜｲﾔ	1	[RWLL/BBR]
-	52N51-42121		WIRE,LEAD,RWL	ﾜｲﾔ	1	[RWL2/BBR]
2	516G1-42111		WIRE,LEAD,RWL	ﾜｲﾔ	1	[RWLR/BBR][RWLL/BBR] [RWL2/BBR]
3	52N58-92111		WIRE-HARNESS,BBR	ﾜｲﾔﾊｰﾈｽ	1	[RWLR/BBR][RWLL/BBR] [RWL2/BBR]
4	52N51-42401		SWITCH,RWL	ｽｲｯﾁ	1	[RWLR/BBR][RWLL/BBR] [RWL2/BBR]
5	26062-42881		RELAY,12V	ﾘﾚｰ	1	[RWLR/BBR][RWLL/BBR] [RWL2/BBR]
6	214A2-42611		SCREW	ｽｸﾘｭ	1	[RWLR/BBR][RWLL/BBR] [RWL2/BBR]
7	52N51-42411		WIRE-HARNESS,SWITCH	ﾜｲﾔﾊｰﾈｽ	1	[RWLR/BBR][RWLL/BBR] [RWL2/BBR]
-	52N51-42511		WIRE-HARNESS,SWITCH	ﾜｲﾔﾊｰﾈｽ	1	[RWLR/BBR/PLR][RWLL/BBR/PLR] [RWL2/BBR/PLR]

FIG.53 REVOLVING LIGHT [RLY][RLR]

(F70324U0) ﾘﾎﾞﾙﾋﾞﾝｸﾞﾗｲﾄ

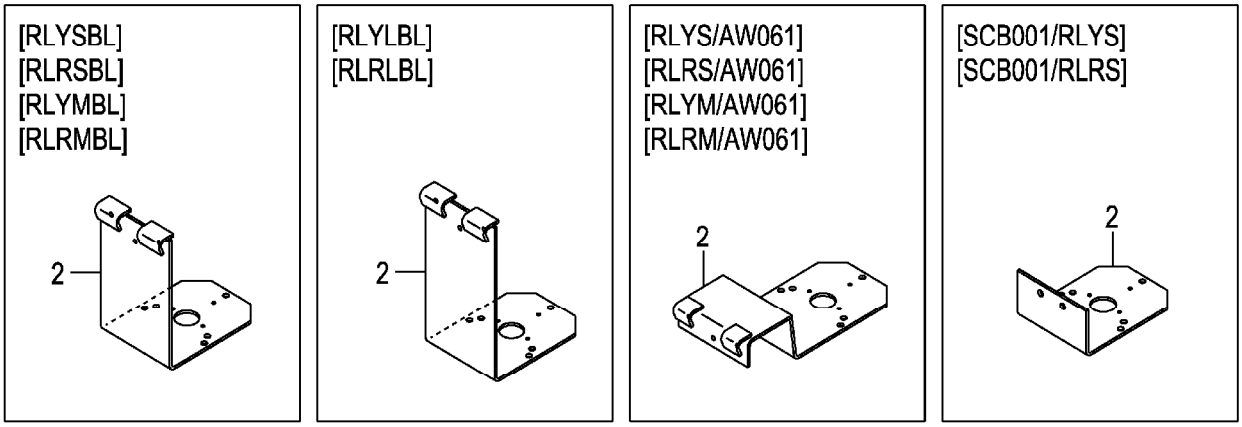

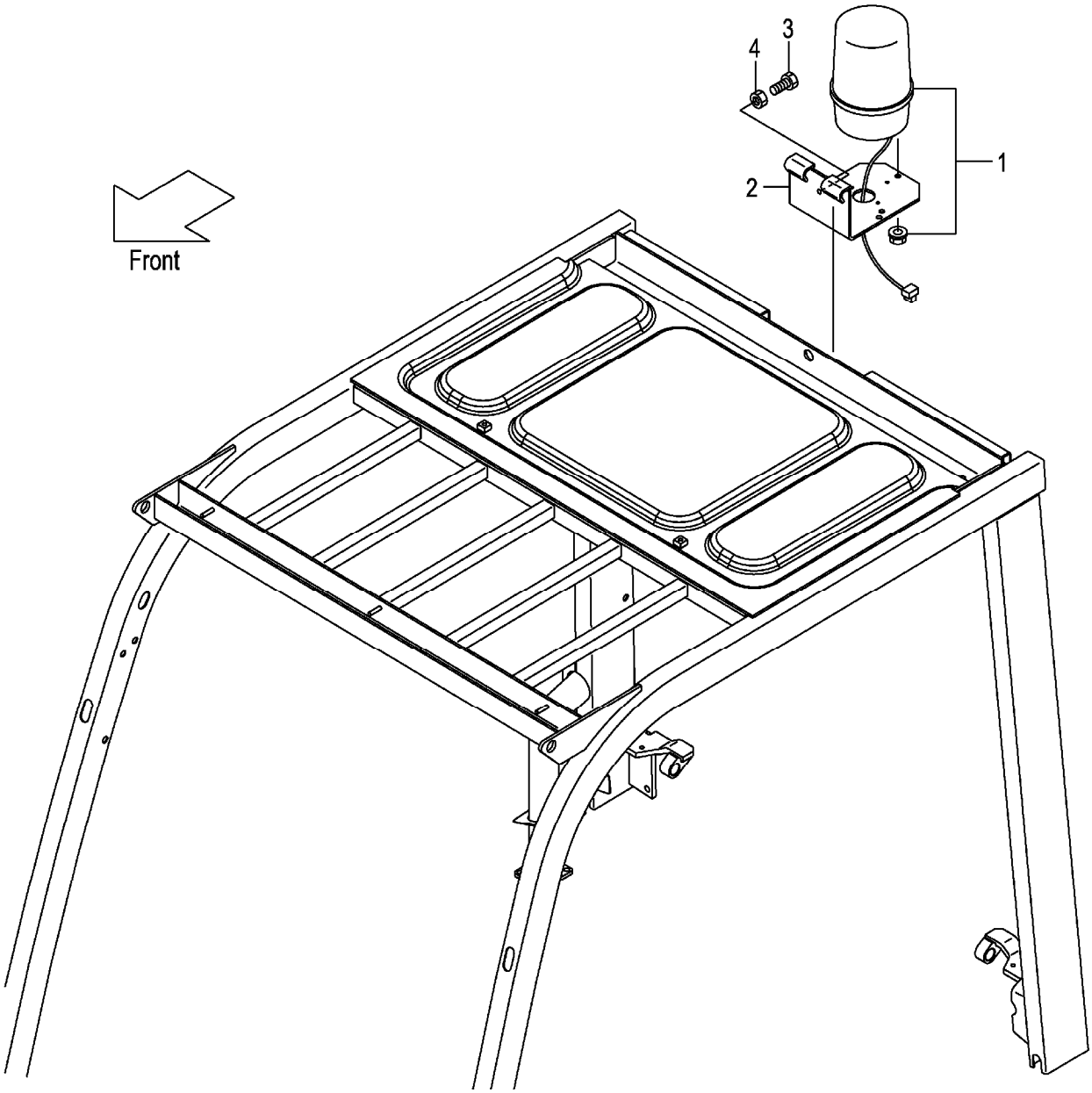

A:FG30C3 FG30T3 FG30W3
B:FD30C3 FD30T3 FD30W3

Item No	Part No.	Mark	Description		Req'd	Remarks : Serial No.
1	514A1-41001		LIGHT,REVOLVING	ﾗｲﾄ	1	[RLYS][RLYSBL]
-	514A1-41011		LIGHT,REVOLVING	ﾗｲﾄ	1	[RLRS][RLRSBL]
-	514A1-41021		LIGHT,REVOLVING	ﾗｲﾄ	1	[RLYM][RLYMBL]
-	514A1-41031		LIGHT,REVOLVING	ﾗｲﾄ	1	[RLRM][RLRMBL]
-	52N58-92201		LIGHT,REVOLVING	ﾗｲﾄ	1	[RLYL][RLYLBL]
-	52N58-92211		LIGHT,REVOLVING	ﾗｲﾄ	1	[RLRL][RLRLBL]
2	529F1-42251		BRACKET,REVOLVING	ﾌﾞﾗｹｯﾄ	1	[RLYS][RLRS][RLYM][RLRM] [RLYL][RLRL]
-	529F1-42201		BRACKET,REVOLVING	ﾌﾞﾗｹｯﾄ	1	[RLYSBL][RLRSBL][RLYMBL] [RLRMBL]
-	52N58-92251		BRACKET,REVOLVING	ﾌﾞﾗｹｯﾄ	1	[RLYLBL][RLRLBL]
-	539A8-92251		BRACKET,REVOLVING	ﾌﾞﾗｹｯﾄ	1	[RLYS/AW061][RLRS/AW061] [RLYM/AW061][RLRM/AW061]
-	535C8-92051		BRACKET,REVOLVING	ﾌﾞﾗｹｯﾄ	1	[SCB001/RLYS][SCB001/RLRS]
3	01100-08020		BOLT	ﾎﾞﾙﾄ	3	[RLYS][RLYM][RLYL]
-	01100-08020		BOLT	ﾎﾞﾙﾄ	3	[RLRS][RLRM][RLRL]
-	01100-08020		BOLT	ﾎﾞﾙﾄ	3	[RLYSBL][RLRSBL][RLYMBL] [RLRMBL][RLYLBL][RLRLBL]
-	01185-08020		BOLT	ﾎﾞﾙﾄ	2	[SCB001/RLYS][SCB001/RLRS]
4	01400-00008		NUT	ﾅｯﾄ	3	[RLYS][RLYM][RLYL] (WITHOUT SCB001/RLYS)
-	01400-00008		NUT	ﾅｯﾄ	3	[RLRS][RLRM][RLRL] (WITHOUT SCB001/RLRS)
-	01400-00008		NUT	ﾅｯﾄ	3	[RLYSBL][RLRSBL][RLYMBL] [RLRMBL][RLYLBL][RLRLBL]

FIG.54 REVOLVING LIGHT WIRE HARNESS [RLY][RLR]

(F70324W0) ﾘﾎﾞﾙﾋﾞﾝｸﾞﾗｲﾄﾜｲﾔﾊｰﾈｽ

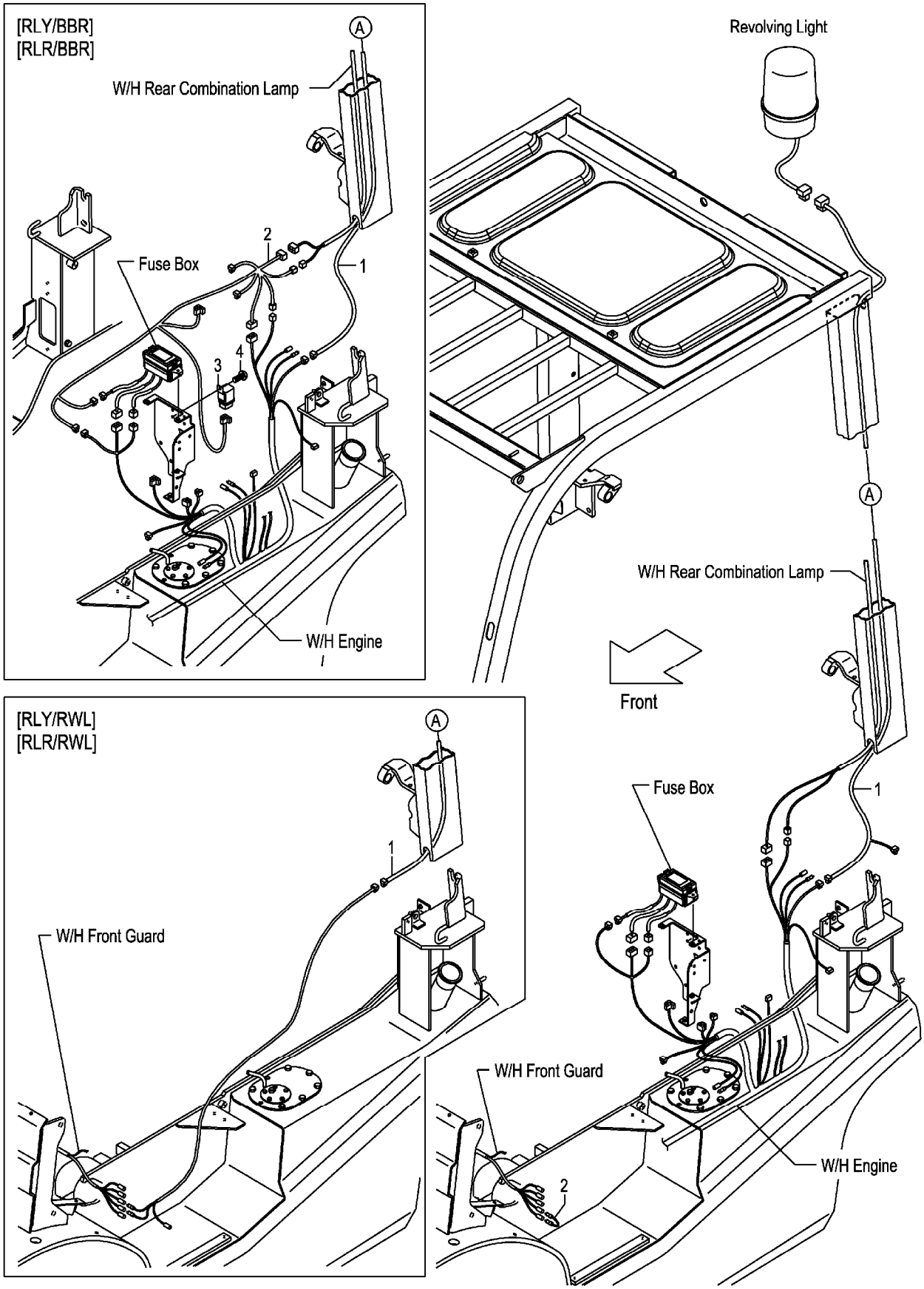

A:FG30C3 FG30T3 FG30W3
B:FD30C3 FD30T3 FD30W3

Item No	Part No.	Mark	Description		Req'd	Remarks : Serial No.
1	52N58-92001		WIRE,LEAD	ﾜｲﾔ	1	[RLY][RLR]
-	52N58-92021		WIRE,LEAD	ﾜｲﾔ	1	[RLY/BBR][RLR/BBR][RLY/RWL] [RLR/RWL]
2	516G1-42211		WIRE,LEAD	ﾜｲﾔ	1	[RLY][RLR]
-	52N58-92111		WIRE-HARNESS,BBR	ﾜｲﾔﾊｰﾈｽ	1	[RLY/BBR][RLR/BBR]
-	52N58-92041		WIRE,LEAD	ﾜｲﾔ	1	[RLY/RWL][RLR/RWL]
3	26062-42881		RELAY,12V	ﾘﾚｰ	1	[RLY/BBR][RLR/BBR]
4	214A2-42611		SCREW	ｽｸﾘｭ	1	[RLY/BBR][RLR/BBR]

FIG.55 BACK BUZZER

(F70324X0) ﾊﾞｯｸﾌﾞｻﾞｰ

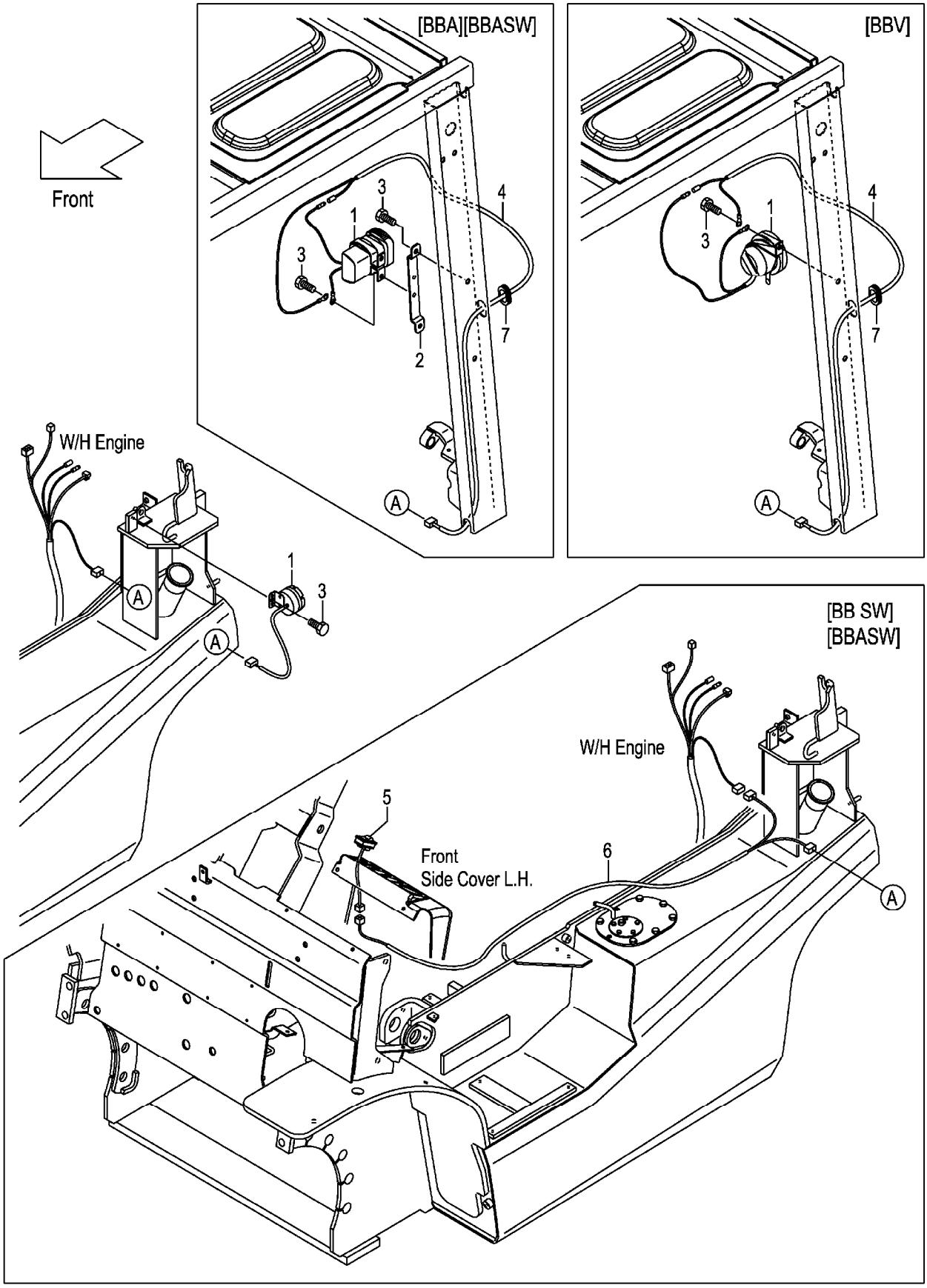

A:FG30C3 FG30T3 FG30W3
B:FD30C3 FD30T3 FD30W3

Item No	Part No.	Mark	Description		Req'd	Remarks : Serial No.
1	234A2-42301		BUZZER,BACK,12V	ﾌﾞｻﾞｰ	1	
-	214A2-44001		BUZZER,BACK,12V	ﾌﾞｻﾞｰ	1	[BBA][BBASW]
-	52N51-30201		ALARM,VOICE	ｱﾗｰﾑ	1	[BBV]
2	52N51-31001		BRACKET,BBA	ﾌﾞﾗｹｯﾄ	1	[BBA][BBASW]
3	01185-08016		BOLT	ﾎﾞﾙﾄ	1	A:1-110
						B:1-126
-	01183-08012		BOLT	ﾎﾞﾙﾄ	1	A:111-
						B:127-
-	01183-08016		BOLT	ﾎﾞﾙﾄ	4	[BBA][BBASW]
-	01183-08016		BOLT	ﾎﾞﾙﾄ	1	[BBV]
4	52N51-32011		WIRE,LEAD,BBA	ﾜｲﾔ	1	[BBA][BBASW][BBV]
5	52N51-32101		SWITCH,ON/OFF	ｽｲｯﾁ	1	[BB SW][BBASW]
6	52N51-32001		WIRE,LEAD,BBSW	ﾜｲﾔ	1	[BB SW][BBASW]
7	54315-32561		GROMMET	ｸﾞﾛﾒｯﾄ	1	A:111-
						B:127-
						[BBA][BBASW][BBV]

FIG.56 HEATER UNIT [HR]

(F70324Y0) ヒータユニット

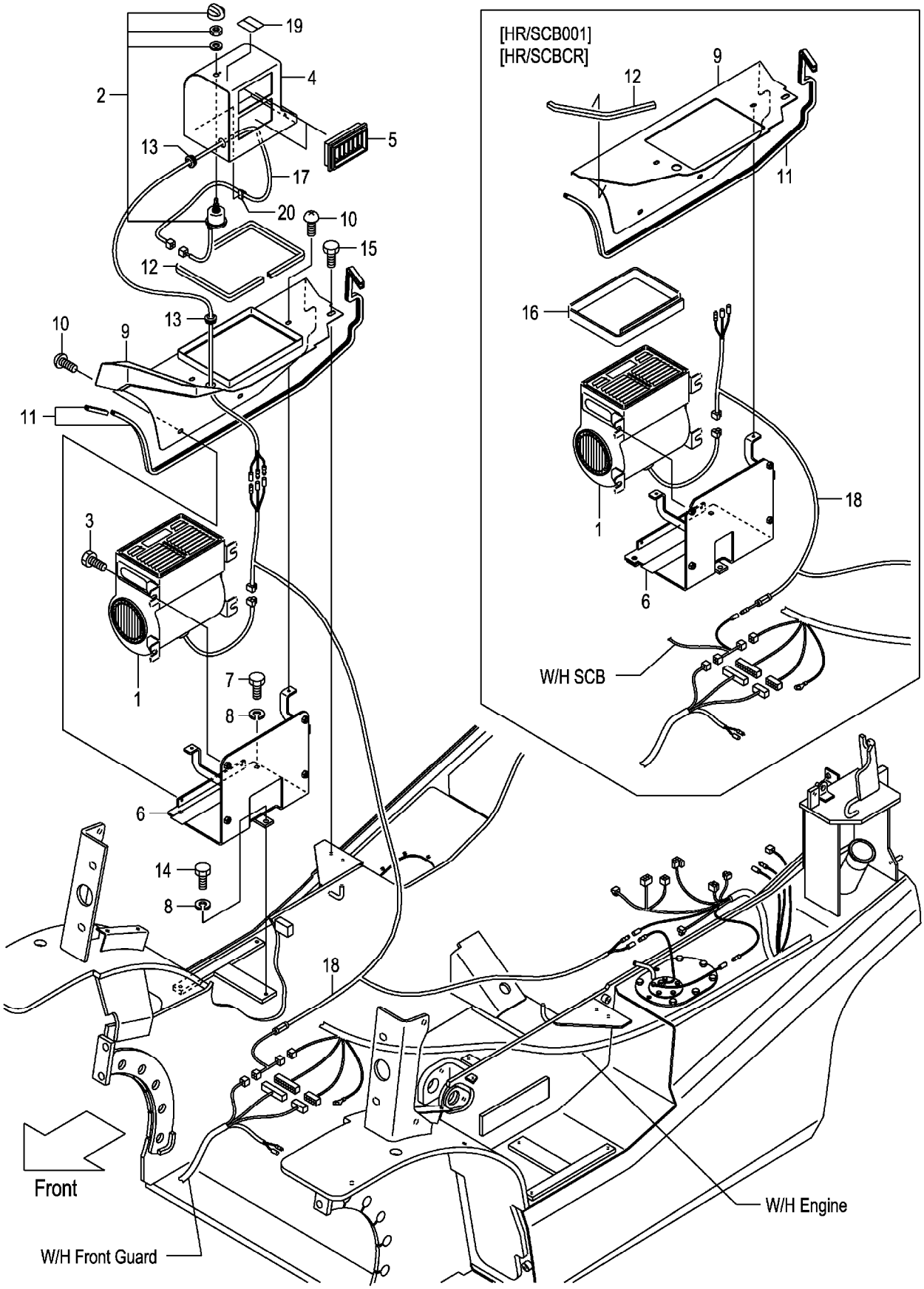

A:FG30C3 FG30T3 C:FD30C3 FD30T3
B:FG30W3 D:FD30W3

Item No	Part No.	Mark	Description		Req'd	Remarks : Serial No.
1	52N57-20301		UNIT,HEATER	ﾕﾆｯﾄ	1	[HR]
2	52N57-20311		SWITCH,HEATER	ｽｲｯﾁ	1	[HR]
3	01186-08020		BOLT	ﾎﾞﾙﾄ	4	[HR]
4	52N57-20201		DUCT	ﾀﾞｸﾄ	1	[HR]
5	25369-47031		GRILLE	ｸﾞﾘﾙ	2	[HR]
6	52N57-20221		BRACKET,HEATER	ﾌﾞﾗｹｯﾄ	1	[HR]
-	52N57-20521		BRACKET,HEATER	ﾌﾞﾗｹｯﾄ	1	[HR/SCB001]
-	52N57-20521		BRACKET,HEATER	ﾌﾞﾗｹｯﾄ	1	A,B,C
						[HR/SCBCR]
7	01100-08020		BOLT	ﾎﾞﾙﾄ	2	[HR]
8	02010-00008		WASHER	ﾜｯｼｬ	3	[HR]
9	52N57-20211		COVER,HEATER	ｶﾊﾞｰ	1	[HR]
-	52N57-22381		COVER,HEATER	ｶﾊﾞｰ	1	[HR/SCB001]
-	52N57-22381		COVER,HEATER	ｶﾊﾞｰ	1	A,B,C
						[HR/SCBCR]
10	214A6-42252		SCREW	ｽｸﾘｭ	4	[HR]
11	222A6-42381		EDGING	ｴｯｼﾞﾝｸﾞ	1	[HR]
12	256C5-12631		SEAL,RUBBER	ｼｰﾙ	1	[HR]
-	509S3-92261		SEAL,RUBBER	ｼｰﾙ	1	[HR/SCB001]
-	509S3-92261		SEAL,RUBBER	ｼｰﾙ	1	A,B,C
						[HR/SCBCR]
13	221A2-42031		GROMMET	ｸﾞﾛﾒｯﾄ	2	[HR]
14	01100-08016		BOLT	ﾎﾞﾙﾄ	1	[HR]
15	01185-08016		BOLT	ﾎﾞﾙﾄ	1	[HR]
16	57045-42141		RUBBER	ﾗﾊﾞｰ	1	[HR/SCB001]
-	57045-42141		RUBBER	ﾗﾊﾞｰ	1	A,B,C
						[HR/SCBCR]
17	52N57-22231		WIRE-HARNESS,SWITCH	ﾜｲﾔﾊｰﾈｽ	1	[HR]
18	52N57-22241		WIRE-HARNESS,HEATER	ﾜｲﾔﾊｰﾈｽ	1	[HR]
-	52N57-22351		WIRE-HARNESS,HEATER	ﾜｲﾔﾊｰﾈｽ	1	[HR/SCB001]
-	52N57-22351		WIRE-HARNESS,HEATER	ﾜｲﾔﾊｰﾈｽ	1	A,B,C
						[HR/SCBCR]
19	52N57-22341		DECAL,HEATER-SWITCH	ﾃﾞｶﾙ	1	[HR]
20	27732-42311		CLAMP,HARNESS	ｸﾗﾝﾌﾟ	1	[HR]

FIG.57 HEATER VALVE & ELBOW [HR]

(F70324Z0) ﾋｰﾀﾊﾞﾙﾌﾞ&ｴﾙﾎﾞ

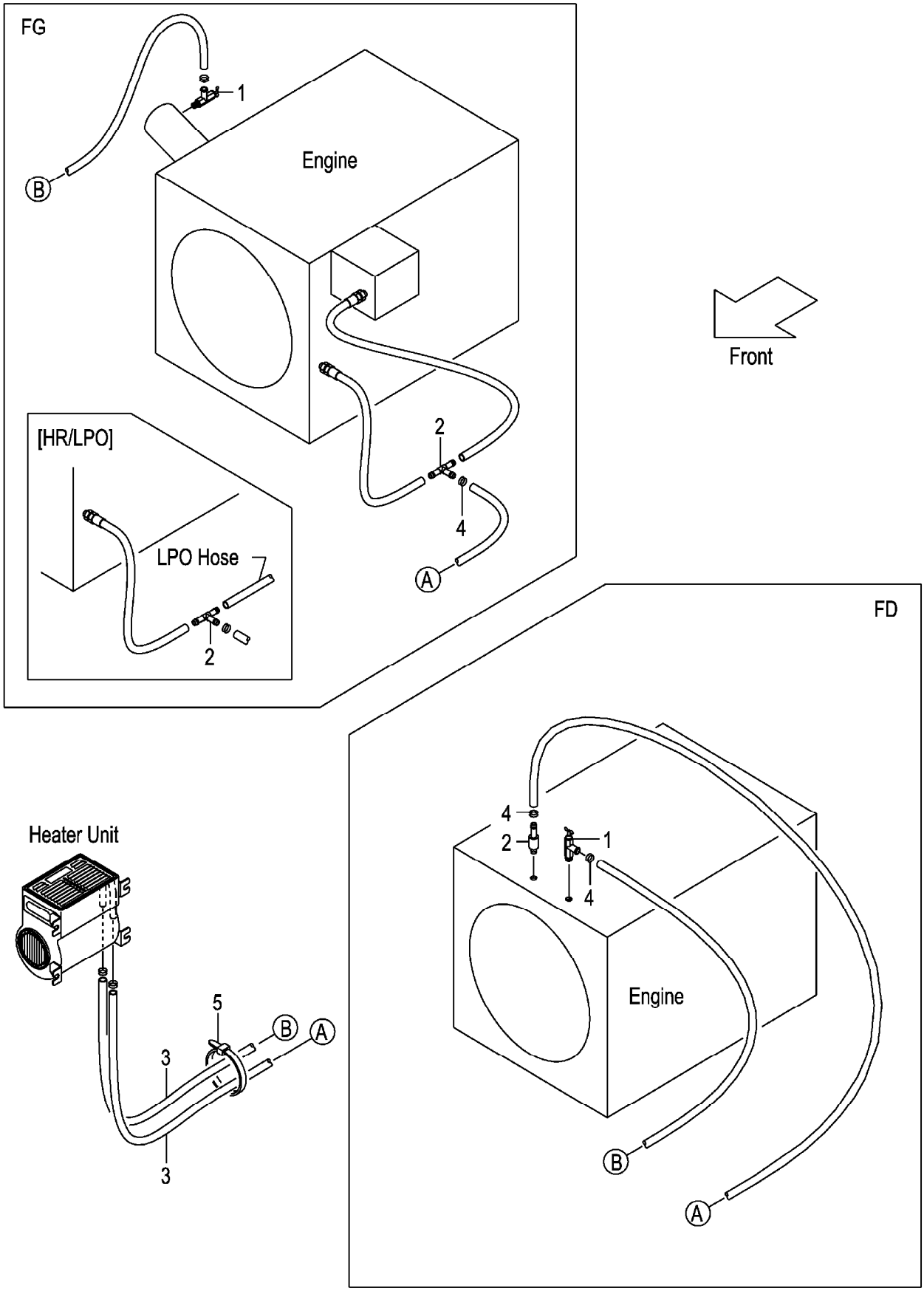

A:FG30C3 FG30T3 FG30W3
B:FD30C3 FD30T3 FD30W3

Item No	Part No.	Mark	Description		Req'd	Remarks : Serial No.
1	56110-63521		VALVE,WATER	ﾊﾞﾙﾌﾞ	1	[HR]
2	23679-45051		THREE-WAY	ｽﾘｰｳｴｲ	1	A
						[HR]
-	529F7-22001		ADAPTER	ｱﾀﾞﾌﾟﾀ	1	B
						[HR]
-	516G7-22001		THREE-WAY	ｽﾘｰｳｴｲ	1	A
						[HR/LPO]
3	522A7-22011		HOSE,WATER	ﾎｰｽ	2	[HR]
4	04911-00022		CLIP	ｸﾘｯﾌﾟ	4	[HR]
5	04913-11200		BAND	ﾊﾞﾝﾄﾞ	10	[HR]

FIG.58 DRIVE UNIT MOUNT (CLUTCH)

(F7032510) ﾄﾞﾗｲﾌﾞﾕﾆｯﾄﾏｳﾝﾄ

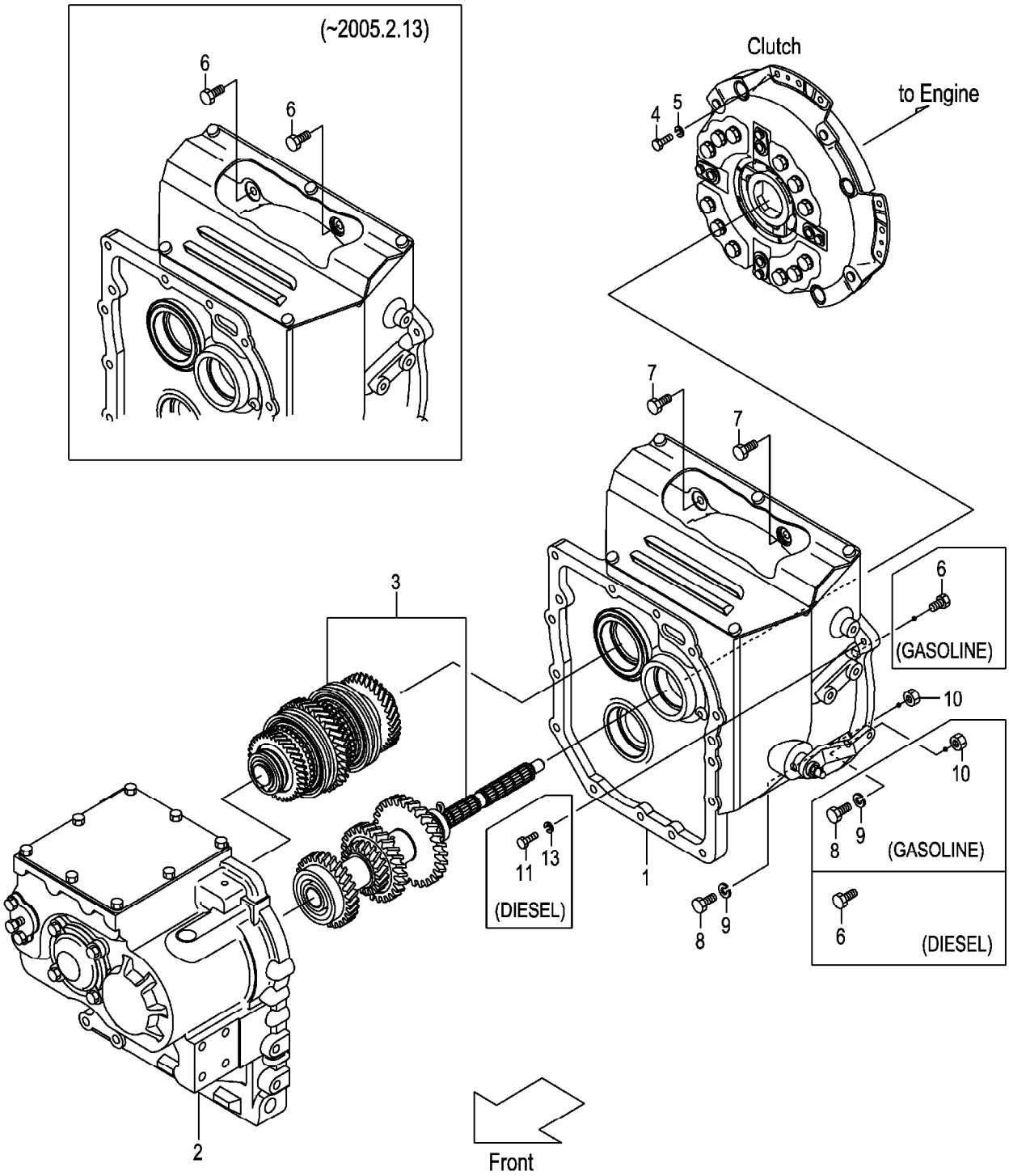

A:FG30C3
B:FD30C3

Item No	Part No.	Mark	Description		Req'd	Remarks : Serial No.
A1	12N42-50201		UNIT-ASSY,DRIVE	ﾄﾞﾗｲﾌﾞﾕﾆｯﾄｱｯｾﾝ	1	INC.1-3
-	12N42-50401		UNIT-ASSY,DRIVE	ﾄﾞﾗｲﾌﾞﾕﾆｯﾄｱｯｾﾝ	1	[PC] INC.1-3
1	NO PART NO.		CLUTCH	ｸﾗｯﾁ	1	SEE FIG.62:1-17
-	NO PART NO.		CLUTCH	ｸﾗｯﾁ	1	[PC]SEE FIG.62:1-17
2	NO PART NO.		CASE,T/M	ｹｰｽ	1	SEE FIG.63
3	NO PART NO.		GEAR,T/M	ｷﾞﾔｰ	1	SEE FIG.64
4	01103-08016		BOLT	ﾎﾞﾙﾄ	12	
5	02011-00008		WASHER	ﾜｯｼｬ	12	
6	01183-10035		BOLT	ﾎﾞﾙﾄ	3	A (-2005.2.13)
-	01183-10035		BOLT	ﾎﾞﾙﾄ	1	A (2005.2.14-)
-	01183-10035		BOLT	ﾎﾞﾙﾄ	3	B (-2005.2.13)
-	01183-10035		BOLT	ﾎﾞﾙﾄ	1	B (2005.2.14-)
7	01183-10030		BOLT	ﾎﾞﾙﾄ	2	A (2005.2.14-)
-	01183-10030		BOLT	ﾎﾞﾙﾄ	2	B (2005.2.14-)
8	01100-10050		BOLT	ﾎﾞﾙﾄ	5	A
-	01100-10050		BOLT	ﾎﾞﾙﾄ	4	B
9	02010-00010		WASHER	ﾜｯｼｬ	5	A
-	02010-00010		WASHER	ﾜｯｼｬ	4	B
10	01400-00010		NUT	ﾅｯﾄ	5	A
-	01400-00010		NUT	ﾅｯﾄ	4	B
11	01103-08040		BOLT	ﾎﾞﾙﾄ	2	B:1-225
-	01103-08035		BOLT	ﾎﾞﾙﾄ	1	B:226-
12	01103-08040	+	BOLT	ﾎﾞﾙﾄ	1	B
13	02010-00008		WASHER	ﾜｯｼｬ	2	B

FIG.59 DRIVE UNIT MOUNT (TOR-CON)

(F7032520) ﾄﾞﾗｲﾌﾞﾕﾆｯﾄﾏｳﾝﾄ

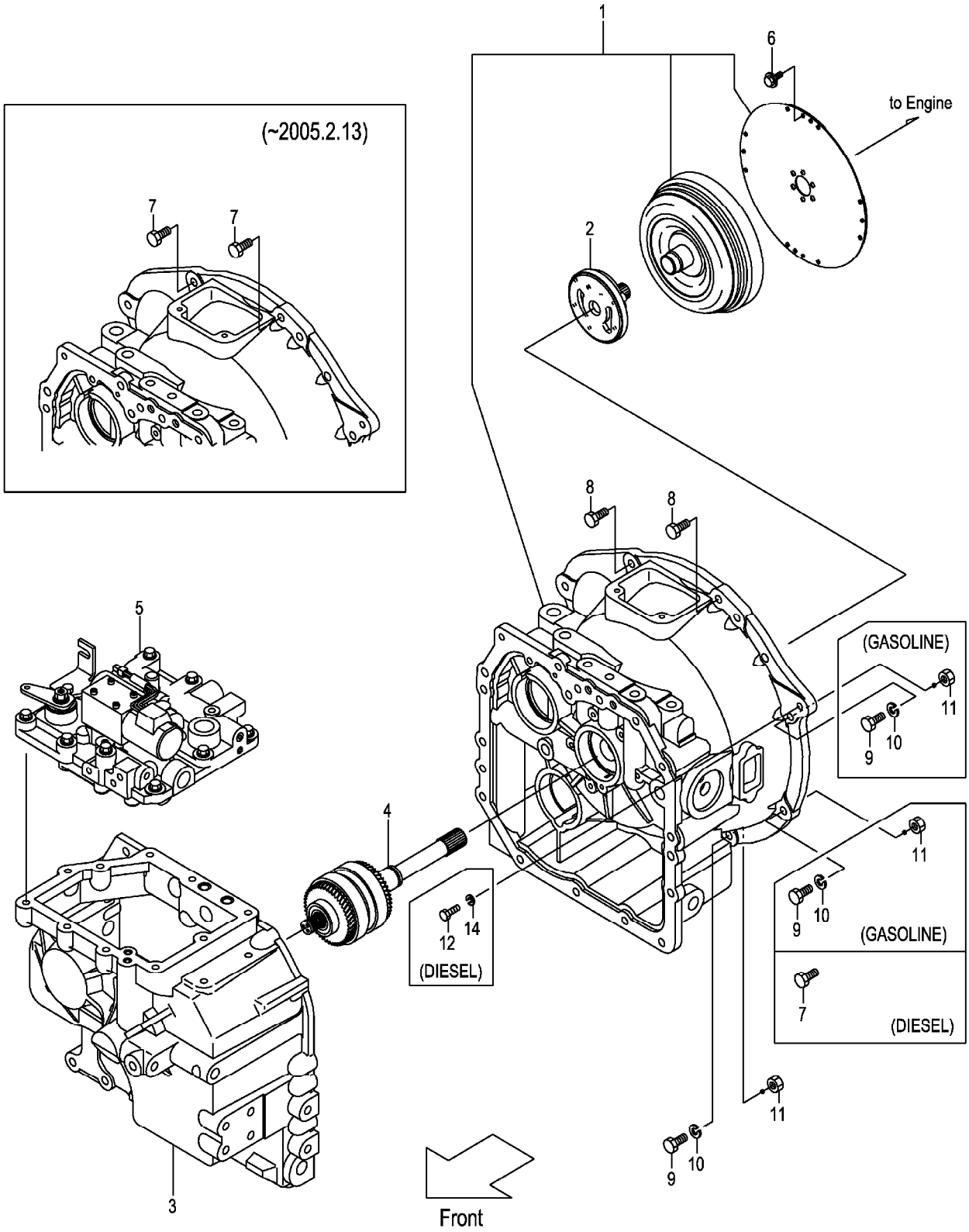

A:FG30T3
B:FD30T3

Item No	Part No.	Mark	Description		Req'd	Remarks : Serial No.
A1	12N52-50201		UNIT-ASSY,DRIVE	ﾄﾞﾗｲﾌﾞﾕﾆｯﾄｱｯｾﾝ	1	INC.1-5
1	NO PART NO.		CASE,T/C	ｹｰｽ	1	SEE FIG.65
2	NO PART NO.		PUMP	ﾎﾟﾝﾌﾟ	1	SEE FIG.66
3	NO PART NO.		CASE,T/M	ｹｰｽ	1	SEE FIG.67
4	NO PART NO.		PACK,CLUTCH	ﾊﾟｯｸ	1	SEE FIG.68
5	NO PART NO.		VALVE,CONTROL	ﾊﾞﾙﾌﾞ	1	SEE FIG.69
6	12N53-82621		BOLT,FLANGE	ﾎﾞﾙﾄ	12	
7	01183-10035		BOLT	ﾎﾞﾙﾄ	2	A (-2005.2.13)
-	01183-10035		BOLT	ﾎﾞﾙﾄ	3	B (-2005.2.13)
-	01183-10035		BOLT	ﾎﾞﾙﾄ	1	B (2005.2.14-)
8	01183-10030		BOLT	ﾎﾞﾙﾄ	2	A (2005.2.14-)
-	01183-10030		BOLT	ﾎﾞﾙﾄ	2	B (2005.2.14-)
9	01100-10050		BOLT	ﾎﾞﾙﾄ	6	A
-	01100-10050		BOLT	ﾎﾞﾙﾄ	4	B
10	02010-00010		WASHER	ﾜｯｼｬ	6	A
-	02010-00010		WASHER	ﾜｯｼｬ	4	B
11	01400-00010		NUT	ﾅｯﾄ	6	A
-	01400-00010		NUT	ﾅｯﾄ	4	B
12	01103-08040		BOLT	ﾎﾞﾙﾄ	2	B:1-225
-	01103-08035		BOLT	ﾎﾞﾙﾄ	1	B:226-
13	01103-08040	+	BOLT	ﾎﾞﾙﾄ	1	B
14	02010-00008		WASHER	ﾜｯｼｬ	2	B

FIG.60 DRIVE UNIT MOUNT (OIL CLUTCH)

(F7032530) ﾄﾞﾗｲﾌﾞﾕﾆｯﾄﾏｳﾝﾄ

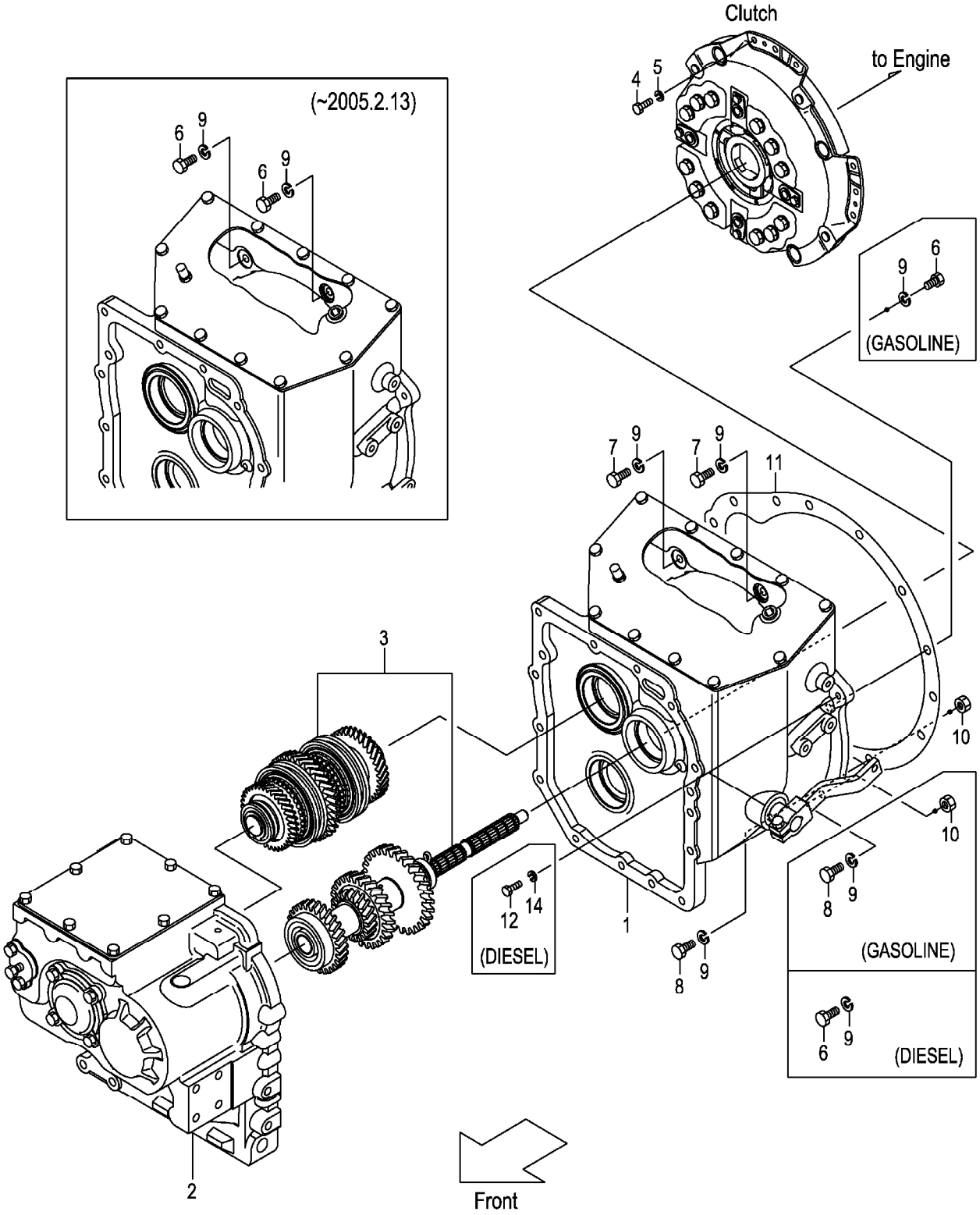

A:FG30W3
B:FD30W3

Item No	Part No.	Mark	Description		Req'd	Remarks : Serial No.
A1	12P42-50201		UNIT-ASSY,DRIVE	ﾄﾞﾗｲﾌﾞﾕﾆｯﾄｱｯｾﾝ	1	INC.1-3
1	NO PART NO.		CLUTCH	ｸﾗｯﾁ	1	SEE FIG.70:1-28
2	NO PART NO.		CASE,T/M	ｹｰｽ	1	SEE FIG.63
3	NO PART NO.		GEAR,T/M	ｷﾞﾔｰ	1	SEE FIG.64
4	01103-08016		BOLT	ﾎﾞﾙﾄ	12	
5	02011-00008		WASHER	ﾜｯｼｬ	12	
6	01103-10035		BOLT	ﾎﾞﾙﾄ	3	A (-2005.2.13)
-	01103-10035		BOLT	ﾎﾞﾙﾄ	1	A (2005.2.14-)
-	01103-10035		BOLT	ﾎﾞﾙﾄ	3	B (-2005.2.13)
-	01103-10035		BOLT	ﾎﾞﾙﾄ	1	B (2005.2.14-)
7	01103-10030		BOLT	ﾎﾞﾙﾄ	2	A (2005.2.14-)
-	01103-10030		BOLT	ﾎﾞﾙﾄ	2	B (2005.2.14-)
8	01100-10050		BOLT	ﾎﾞﾙﾄ	5	A
-	01100-10050		BOLT	ﾎﾞﾙﾄ	4	B
9	02010-00010		WASHER	ﾜｯｼｬ	8	A
-	02010-00010		WASHER	ﾜｯｼｬ	7	B
10	01400-00010		NUT	ﾅｯﾄ	5	A
-	01400-00010		NUT	ﾅｯﾄ	4	B
11	213L2-52001		GASKET	ｶﾞｽｹｯﾄ	1	A
-	242S2-52001		GASKET	ｶﾞｽｹｯﾄ	1	B
12	01103-08040		BOLT	ﾎﾞﾙﾄ	2	B:1-225
-	01103-08035		BOLT	ﾎﾞﾙﾄ	1	B:226-
13	01103-08040	+	BOLT	ﾎﾞﾙﾄ	1	B
14	02010-00008		WASHER	ﾜｯｼｬ	2	B

FIG.61 CHANGE LEVER (CLUTCH)(OIL CLUTCH)

(F7032540) チェンジレバー

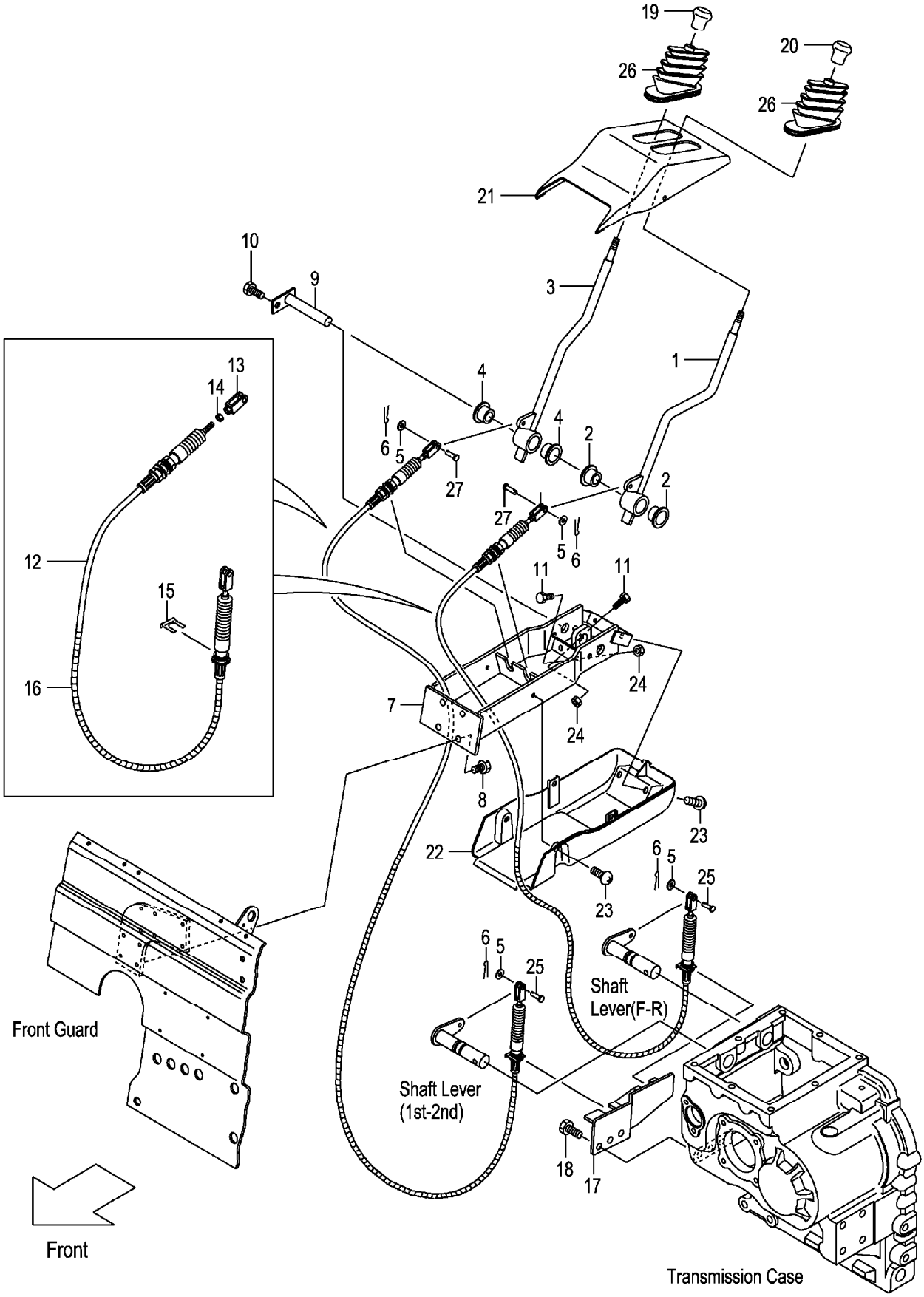

A:FG30C3 FG30W3
B:FD30C3 FD30W3

Item No	Part No.	Mark	Description		Req'd	Remarks : Serial No.
A1	22N43-90201		LEVER-ASSY,DIRECTION	ﾃﾞｨﾚｸｼｮﾝﾚﾊﾞｰｱｯｾﾝ	1	INC.1,2
1	NO PART NO.	#	LEVER,DIRECTION	ﾚﾊﾞｰ	1	
2	214A7-42071		BUSHING	ﾌﾞｯｼﾝｸﾞ	2	
A2	22N43-90211		LEVER-ASSY,SPEED	ｽﾋﾟｰﾄﾞﾚﾊﾞｰｱｯｾﾝ	1	INC.3,4
3	NO PART NO.	#	LEVER,SPEED	ﾚﾊﾞｰ	1	
4	214A7-42071		BUSHING	ﾌﾞｯｼﾝｸﾞ	2	
5	02000-00006		WASHER	ﾜｯｼｬ	4	
6	02200-16010		PIN,COTTER	ﾋﾟﾝ	4	
7	22N43-90301		BRACKET	ﾌﾞﾗｹｯﾄ	1	
8	01185-08020		BOLT	ﾎﾞﾙﾄ	4	
9	22N43-92201		SHAFT	ｼｬﾌﾄ	1	
10	01183-08012		BOLT	ﾎﾞﾙﾄ	1	
11	01100-08025		BOLT	ﾎﾞﾙﾄ	4	
A3	22N43-90511		CABLE-ASSY	ｹｰﾌﾞﾙｱｯｾﾝ	2	INC.12-16
12	22N43-93001		CABLE	ｹｰﾌﾞﾙ	2	
13	22N43-93021		END	ｴﾝﾄﾞ	2	
14	01402-00006		NUT	ﾅｯﾄ	2	
15	22N43-93011		CLAMP	ｸﾗﾝﾌﾟ	2	
16	22N43-93031		PROTECTOR	ﾌﾟﾛﾃｸﾀ	2	
17	22N43-92301		BRACKET	ﾌﾞﾗｹｯﾄ	1	
18	01213-10025		BOLT	ﾎﾞﾙﾄ	3	
19	214A2-52002		KNOB,SPEED	ﾉﾌﾞ	1	
20	214A2-52012		KNOB,DIRECTION	ﾉﾌﾞ	1	
21	22N43-92701	+	COVER,LH	ｶﾊﾞｰ	1	A:1-109 B:1-101
-	22N43-92901		COVER,UPPER	ｶﾊﾞｰ	1	A:110- B:102-
22	22N43-92711	+	COVER,RH	ｶﾊﾞｰ	1	A:1-109 B:1-101
-	22N43-92911		COVER,UNDER	ｶﾊﾞｰ	1	A:110- B:102-
23	01033-06012		SCREW	ｽｸﾘｭ	4	A:1-110 B:1-126
-	225R6-42031		SCREW	ｽｸﾘｭ	4	A:111- B:127-
24	01402-00008		NUT	ﾅｯﾄ	4	
25	02262-06015		PIN,CLEVIS	ﾋﾟﾝ	2	
26	22N43-92731		BOOT	ﾌﾞｰﾂ	2	
27	02262-06020		PIN,CLEVIS	ﾋﾟﾝ	2	

FIG.62 CLUTCH (CLUTCH)

(F7032550) クラッチ

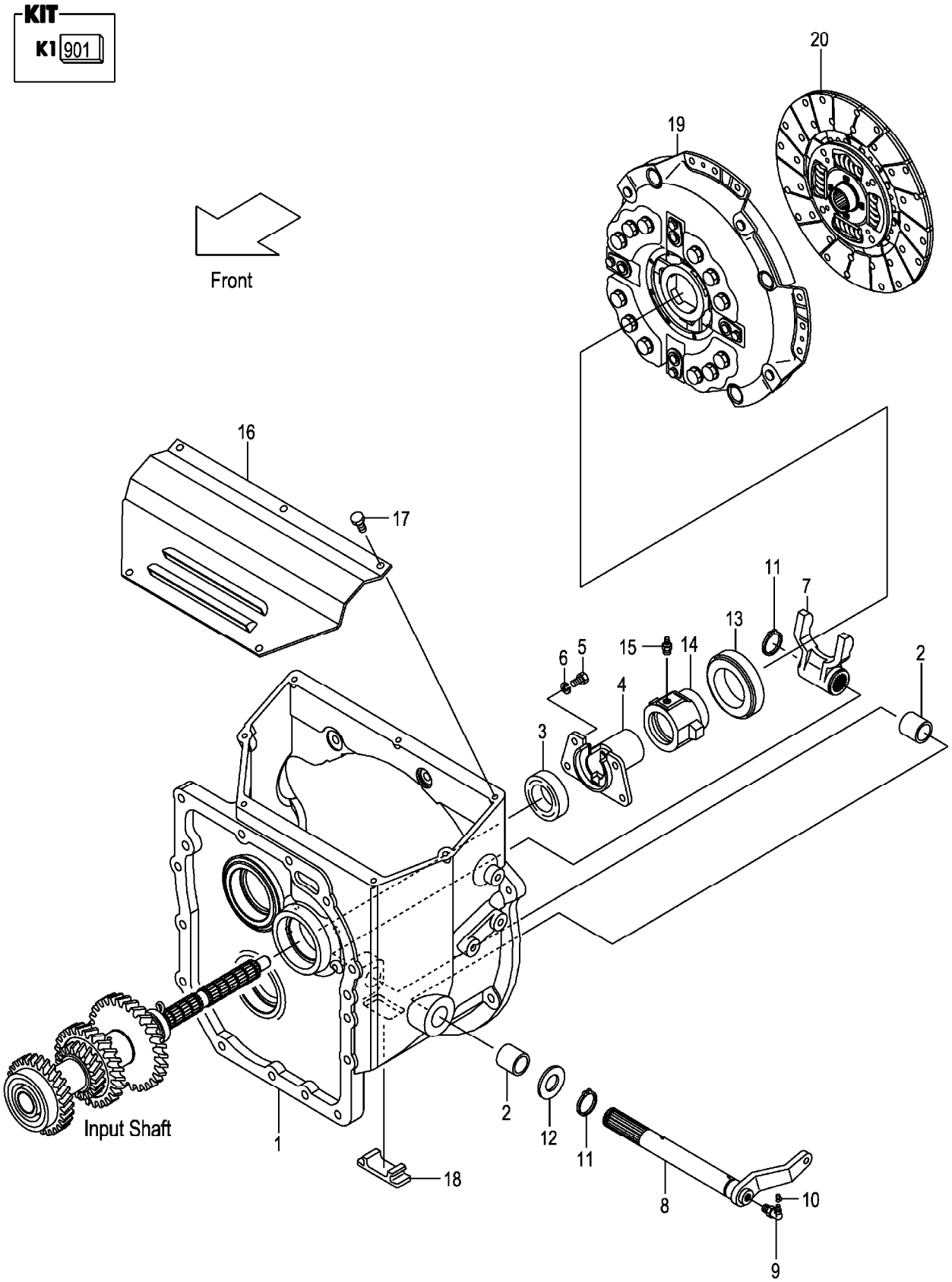

A:FG30C3
B:FD30C3

Item No	Part No.	Mark	Description		Req'd	Remarks : Serial No.
901	12N43-19801	K1	KIT,REPAIR,T/M	ﾘﾍﾟｱｷｯﾄ	1	INC.3,11,FIG.64:3,5,13, 17,19,27,28,30
1	12N43-12001		HOUSING,CLUTCH	ﾊｳｼﾞﾝｸﾞ	1	
2	12003-12021		BUSHING	ﾌﾞｯｼﾝｸﾞ	2	
3	12N43-12011	*	SEAL,OIL	ｼｰﾙ	1	
4	12N43-12021		SUPPORT,RETAINER	ｻﾎﾟｰﾄ	1	
5	01103-08016		BOLT	ﾎﾞﾙﾄ	4	
6	02011-00008		WASHER	ﾜｯｼｬ	4	
7	12N43-12101		YOKE	ﾖｰｸ	1	
8	12N43-12111		SHAFT	ｼｬﾌﾄ	1	
-	52N42-12001		SHAFT	ｼｬﾌﾄ	1	[PC]
9	04901-00190		FITTING	ﾌｨｯﾃｨﾝｸﾞ	1	
10	22199-12401		CAP,NIPPLE	ｷｬｯﾌﾟ	1	
11	02100-00025	*	RING,SNAP	ｽﾅｯﾌﾟﾘﾝｸﾞ	2	
12	02000-00024		WASHER	ﾜｯｼｬ	1	
13	135C3-12081		BEARING,THRUST	ﾍﾞｱﾘﾝｸﾞ	1	
14	12N43-12201		RETAINER,BEARING	ﾘﾃｰﾅ	1	
15	04901-00100		FITTING	ﾌｨｯﾃｨﾝｸﾞ	1	
16	12N43-12151		COVER,CLUTCH-HOUSING	ｶﾊﾞｰ	1	
17	01183-08016		BOLT	ﾎﾞﾙﾄ	5	
18	12N53-82061		COVER,UNDER	ｶﾊﾞｰ	1	
19	12N43-10201		COVER,CLUTCH	ｶﾊﾞｰ	1	
20	10A63-10211		DISK,CLUTCH	ﾃﾞｨｽｸ	1	A
-	12N43-10211		DISK,CLUTCH	ﾃﾞｨｽｸ	1	B

FIG.63 MISSION CASE (CLUTCH)(OIL CLUTCH)

(F7032560) ミッションケース

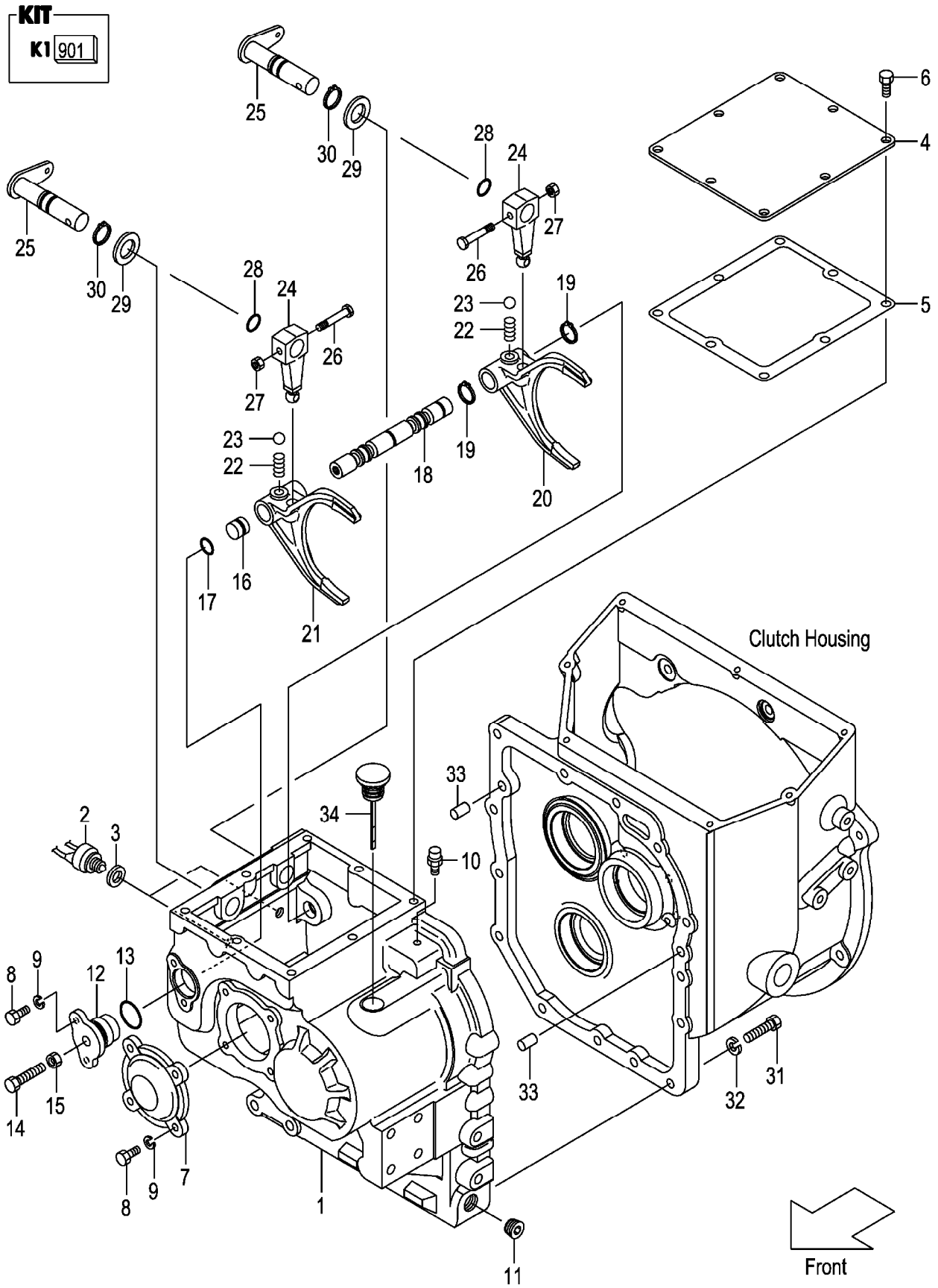

A:FG30C3 FG30W3
B:FD30C3 FD30W3

Item No	Part No.	Mark	Description		Req'd	Remarks : Serial No.
901	12N43-19811	K1	KIT,REPAIR,SHIFT-ROD	ﾘﾍﾟｱｷｯﾄ	1	INC.3,5,13,17,19,27,28,30
1	12N43-42001		CASE,T/M	ｹｰｽ	1	
2	12003-42451		SWITCH,BACK-LAMP	ｽｲｯﾁ	2	
3	12003-42461	*	PACKING,BACK-LAMP	ﾊﾟｯｷﾝｸﾞ	2	
4	12N43-42511		COVER,CASE	ｶﾊﾞｰ	1	
5	12N43-42521	*	GASKET,CASE-COVER	ｶﾞｽｹｯﾄ	1	
6	01184-10016		BOLT	ﾎﾞﾙﾄ	8	
7	12N43-42031		COVER,BEARING	ｶﾊﾞｰ	1	
8	01103-08020		BOLT	ﾎﾞﾙﾄ	6	
9	02011-00008		WASHER	ﾜｯｼｬ	6	
10	15573-42151		BREATHER,AIR	ﾌﾞﾘｰｻﾞ	1	
11	12163-82541		PLUG	ﾌﾟﾗｸﾞ	1	
12	12003-42052		SUPPORT,ARM-SHAFT	ｻﾎﾟｰﾄ	1	
13	03310-00300	*	O-RING	Oﾘﾝｸﾞ	1	
14	01123-10045		BOLT	ﾎﾞﾙﾄ	1	
15	01400-00010		NUT	ﾅｯﾄ	1	
16	12003-42061		SPACER	ｽﾍﾟｰｻ	1	
17	03300-00160	*	O-RING	Oﾘﾝｸﾞ	1	
18	12N43-42401		ROD,SHIFT	ﾛｯﾄﾞ	1	
19	02100-00020	*	RING,SNAP	ｽﾅｯﾌﾟﾘﾝｸﾞ	2	
20	12N43-42411		FORK,SHIFT,F-R	ﾌｫｰｸ	1	
21	12N43-42421		FORK,SHIFT,H-L	ﾌｫｰｸ	1	
22	12N43-42481		SPRING	ｽﾌﾟﾘﾝｸﾞ	2	
23	03190-00013		BALL,STEEL	ﾎﾞｰﾙ	2	
24	12N43-42431		ARM,SHIFT	ｱｰﾑ	2	
25	12N43-42441		LEVER,SHIFT	ﾚﾊﾞｰ	2	
26	12N43-42471		BOLT	ﾎﾞﾙﾄ	2	
27	23652-12051	*	NUT	ﾅｯﾄ	2	
28	03300-00180	*	O-RING	Oﾘﾝｸﾞ	2	
29	02000-00022		WASHER	ﾜｯｼｬ	2	
30	02100-00022	*	RING,SNAP	ｽﾅｯﾌﾟﾘﾝｸﾞ	2	
31	01103-10040		BOLT	ﾎﾞﾙﾄ	14	
32	02011-00010		WASHER	ﾜｯｼｬ	14	
33	02212-12020		PIN,PARALLEL	ﾋﾟﾝ	2	
34	12N43-42501		GAUGE,LEVEL	ｹﾞｰｼﾞ	1	

FIG.64 MISSION GEAR (CLUTCH)(OIL CLUTCH)

(F7032570) ミッションギヤー

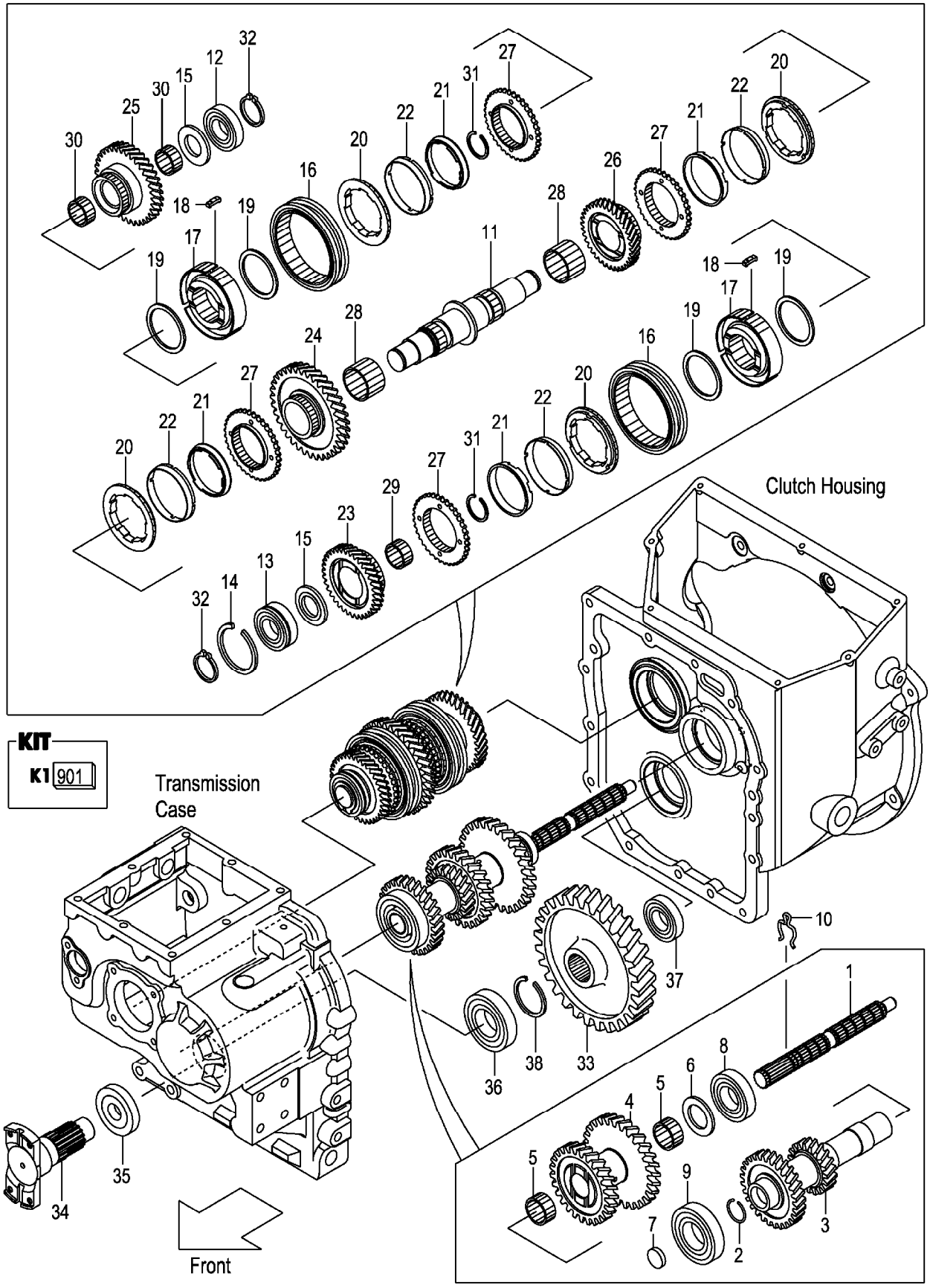

A:FG30C3 C:FD30C3
B:FG30W3 D:FD30W3

Item No	Part No.	Mark	Description		Req'd	Remarks : Serial No.
901	12N43-19801	K1	KIT,REPAIR,T/M	ﾘﾍﾟｱｷｯﾄ	1	A,C INC.2,7,14,32,35,38, FIG.62:3,11
-	12P43-19801	K1	KIT,REPAIR,T/M	ﾘﾍﾟｱｷｯﾄ	1	B,D INC.2,7,14,32,35,38, FIG.70:7-11,21,23
1	12N43-42051		SHAFT,MAIN-DRIVE	ｼｬﾌﾄ	1	
2	12N43-42071	*	RING,SNAP	ｽﾅｯﾌﾟﾘﾝｸﾞ	1	
3	12N43-42101		SHAFT,INPUT	ｼｬﾌﾄ	1	
4	12N43-42111		GEAR,COUNTER	ｷﾞﾔｰ	1	
5	12N43-42121		BEARING,NEEDLE	ﾍﾞｱﾘﾝｸﾞ	2	
6	12N43-42131		PLATE,THRUST	ﾌﾟﾚｰﾄ	1	
7	134A3-42071	*	CAP	ｷｬｯﾌﾟ	1	
8	03000-06207		BEARING,BALL	ﾍﾞｱﾘﾝｸﾞ	1	
9	03000-06208		BEARING,BALL	ﾍﾞｱﾘﾝｸﾞ	1	
10	12N43-42061		PIN,LOCK	ﾋﾟﾝ	1	
11	12N43-42141		SHAFT,MAIN	ｼｬﾌﾄ	1	
12	03000-06306		BEARING,BALL	ﾍﾞｱﾘﾝｸﾞ	1	
13	03003-06306		BEARING,BALL	ﾍﾞｱﾘﾝｸﾞ	1	
14	03192-30072	*	RING,SNAP	ｽﾅｯﾌﾟﾘﾝｸﾞ	1	
15	12N43-42191		PLATE,THRUST	ﾌﾟﾚｰﾄ	2	
16	12N43-42151		SLEEVE	ｽﾘｰﾌﾞ	2	
17	12N43-42161		HUB,CLUTCH	ﾊﾌﾞ	2	
18	12N43-42171		INSERT	ｲﾝｻｰﾄ	6	
19	15573-42021		SPRING,INSERT	ｽﾌﾟﾘﾝｸﾞ	4	
A1	12N43-40251		RING-ASSY,SYNCHRO	ﾘﾝｸﾞｱｯｾﾝ	4	INC.20-22
20	12N43-42201		RING,OUTER,SYNCHRO	ﾘﾝｸﾞ	4	
21	12N43-42211		RING,INNER,SYNCHRO	ﾘﾝｸﾞ	4	
22	12N43-42221		CORN,MIDDLE	ｺｰﾝ	4	
23	12N43-42251		GEAR,HIGH-SPEED	ｷﾞﾔｰ	1	
24	12N43-42261		GEAR,LOW-SPEED	ｷﾞﾔｰ	1	
25	12N43-42271		GEAR,FORWARD	ｷﾞﾔｰ	1	
26	12N43-42281		GEAR,REVERSE	ｷﾞﾔｰ	1	
27	12N43-42291		GEAR	ｷﾞﾔｰ	4	
28	12N43-42301		BEARING,NEEDLE	ﾍﾞｱﾘﾝｸﾞ	2	
29	12003-42251		BEARING,NEEDLE	ﾍﾞｱﾘﾝｸﾞ	1	
30	12N43-42321		BEARING,NEEDLE	ﾍﾞｱﾘﾝｸﾞ	2	
31	02120-00038		RING,SNAP	ｽﾅｯﾌﾟﾘﾝｸﾞ	2	
32	02100-00030	*	RING,SNAP	ｽﾅｯﾌﾟﾘﾝｸﾞ	2	
-	12N43-42551	*	RING,SNAP,T-1.7	ｽﾅｯﾌﾟﾘﾝｸﾞ	(2)	
-	12N43-42561	*	RING,SNAP,T-1.8	ｽﾅｯﾌﾟﾘﾝｸﾞ	(2)	
-	12N43-42571	*	RING,SNAP,T-1.9	ｽﾅｯﾌﾟﾘﾝｸﾞ	(2)	
-	12N43-42581	*	RING,SNAP,T-2.0	ｽﾅｯﾌﾟﾘﾝｸﾞ	(2)	
33	12N43-42351		GEAR,OUTPUT	ｷﾞﾔｰ	1	
34	12N53-82201		FLANGE,T/M-OUTPUT	ﾌﾗﾝｼﾞ	1	
35	12N53-82211	*	SEAL,OIL	ｼｰﾙ	1	
36	03000-06208		BEARING,BALL	ﾍﾞｱﾘﾝｸﾞ	1	
37	03000-06306		BEARING,BALL	ﾍﾞｱﾘﾝｸﾞ	1	
38	02120-00040	*	RING,SNAP	ｽﾅｯﾌﾟﾘﾝｸﾞ	1	

FIG.65 TORQUE CONVERTER CASE (TOR-CON)

(F7032580) トルクコンバータケース

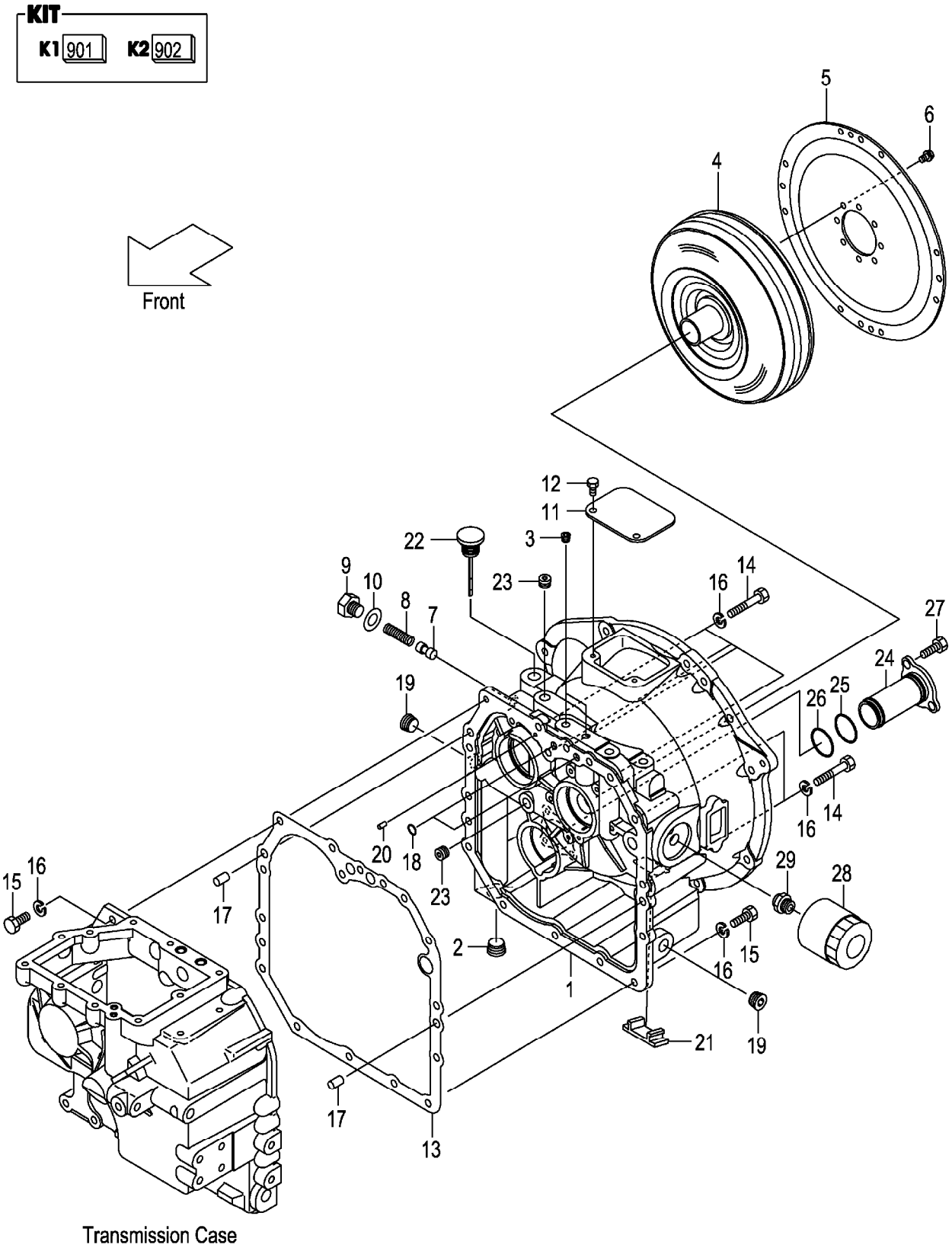

A:FG30T3
B:FD30T3

Item No	Part No.	Mark	Description		Req'd	Remarks : Serial No.
901	12N53-89801	K1	KIT,REPAIR,T/M	ﾘﾍﾟｱｷｯﾄ	1	INC.10,13,18,FIG.67:9,11-14
902	12N53-89811	K2	KIT,SUCTION-STRAINER	ｻｸｼｮﾝｽﾄﾚｰﾅｷｯﾄ	1	INC.24-26
1	12N53-82001		CASE,TOR-CON	ｹｰｽ	1	
2	27397-52101		PLUG	ﾌﾟﾗｸﾞ	1	
3	116H3-82101		PLUG	ﾌﾟﾗｸﾞ	2	
4	12N53-80301		TORQUE-CONVERTER	ﾄﾙｸｺﾝﾊﾞｰﾀ	1	
5	12N53-80311		PLATE,INPUT	ﾌﾟﾚｰﾄ	1	
6	12N53-82621		BOLT,FLANGE	ﾎﾞﾙﾄ	8	
7	12N53-82011		PISTON	ﾋﾟｽﾄﾝ	1	
8	12163-82331		SPRING	ｽﾌﾟﾘﾝｸﾞ	1	
9	12N53-82021		PLUG	ﾌﾟﾗｸﾞ	1	
10	12163-82421	*	PACKING	ﾊﾟｯｷﾝｸﾞ	1	
11	12N53-82041		COVER,UPPER	ｶﾊﾞｰ	1	
12	01185-08016		BOLT	ﾎﾞﾙﾄ	2	
13	12N53-82081	*	GASKET	ｶﾞｽｹｯﾄ	1	
14	01103-10065		BOLT	ﾎﾞﾙﾄ	6	
15	01103-10030		BOLT	ﾎﾞﾙﾄ	9	
16	02011-00010		WASHER	ﾜｯｼｬ	15	
17	02212-12020		PIN,PARALLEL	ﾋﾟﾝ	2	
18	15583-82521	*	O-RING	Oﾘﾝｸﾞ	2	
19	12163-82541		PLUG	ﾌﾟﾗｸﾞ	2	
20	15943-83261		PIN,PARALLEL	ﾋﾟﾝ	1	
21	12N53-82061		COVER,UNDER	ｶﾊﾞｰ	1	
22	12N53-82711		GAUGE,LEVEL	ｹﾞｰｼﾞ	1	
23	24329-45541		PLUG	ﾌﾟﾗｸﾞ	2	
24	NO PART NO.	#*	STRAINER,SUCTION	ｽﾄﾚｰﾅ	1	
25	115G3-82111	*	O-RING	Oﾘﾝｸﾞ	1	
26	12N53-82761	*	O-RING	Oﾘﾝｸﾞ	1	
27	01100-08020		BOLT	ﾎﾞﾙﾄ	3	
28	115G3-82241		FILTER,OIL	ﾌｨﾙﾀ	1	
29	115G3-82251		NIPPLE	ﾆｯﾌﾟﾙ	1	

FIG.66 CHARGING PUMP (TOR-CON)

(F7032590) ﾁｬｰｼﾞﾝｸﾞﾎﾟﾝﾌﾟ

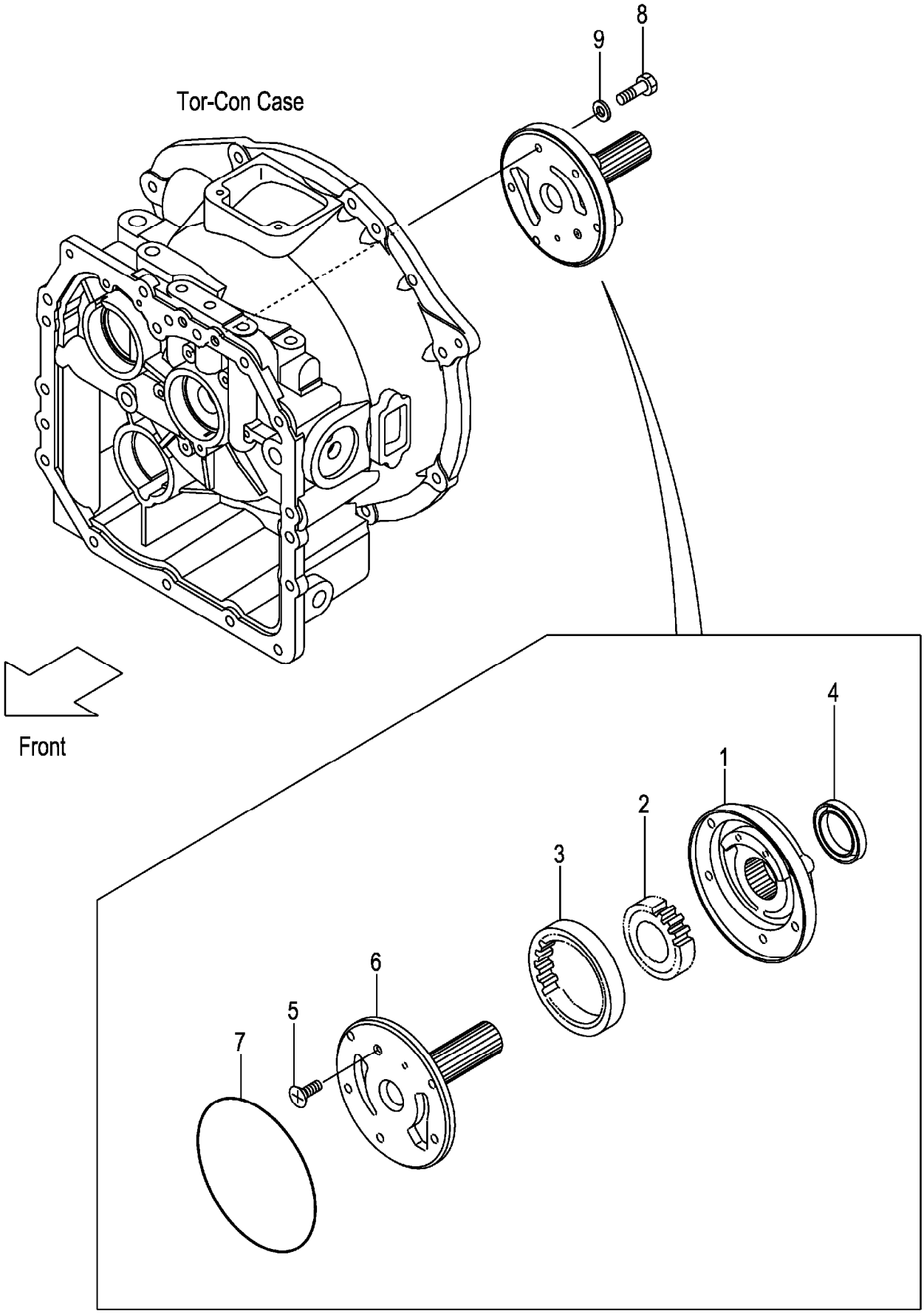

A:FG30T3
B:FD30T3

Item No	Part No.	Mark	Description		Req'd	Remarks : Serial No.
A1	12N53-80321		PUMP-ASSY,CHARGING		1	INC.1-7
				ﾁｬｰｼﾞﾝｸﾞﾎﾟﾝﾌﾟｱｯｾﾝ		
1	NO PART NO.	#	CASE,PUMP	ｹｰｽ	1	
2	NO PART NO.	#	GEAR,DRIVE	ｷﾞﾔｰ	1	
3	NO PART NO.	#	GEAR,DRIVEN	ｷﾞﾔｰ	1	
4	BK-8104209010		SEAL,OIL	ｼｰﾙ	1	
5	BK-8059061000		SCREW	ｽｸﾘｭ	1	
6	BK-7341006000		SUPPORT,STARTER	ｻﾎﾟｰﾄ	1	
7	BK-81431A4700		O-RING	Oﾘﾝｸﾞ	1	
8	12N53-82641		BOLT,FLANGE	ﾎﾞﾙﾄ	5	
9	12163-82561		PACKING	ﾊﾟｯｷﾝｸﾞ	5	

FIG.67 MISSION CASE (TOR-CON)

(F70325A0) ミッションケース

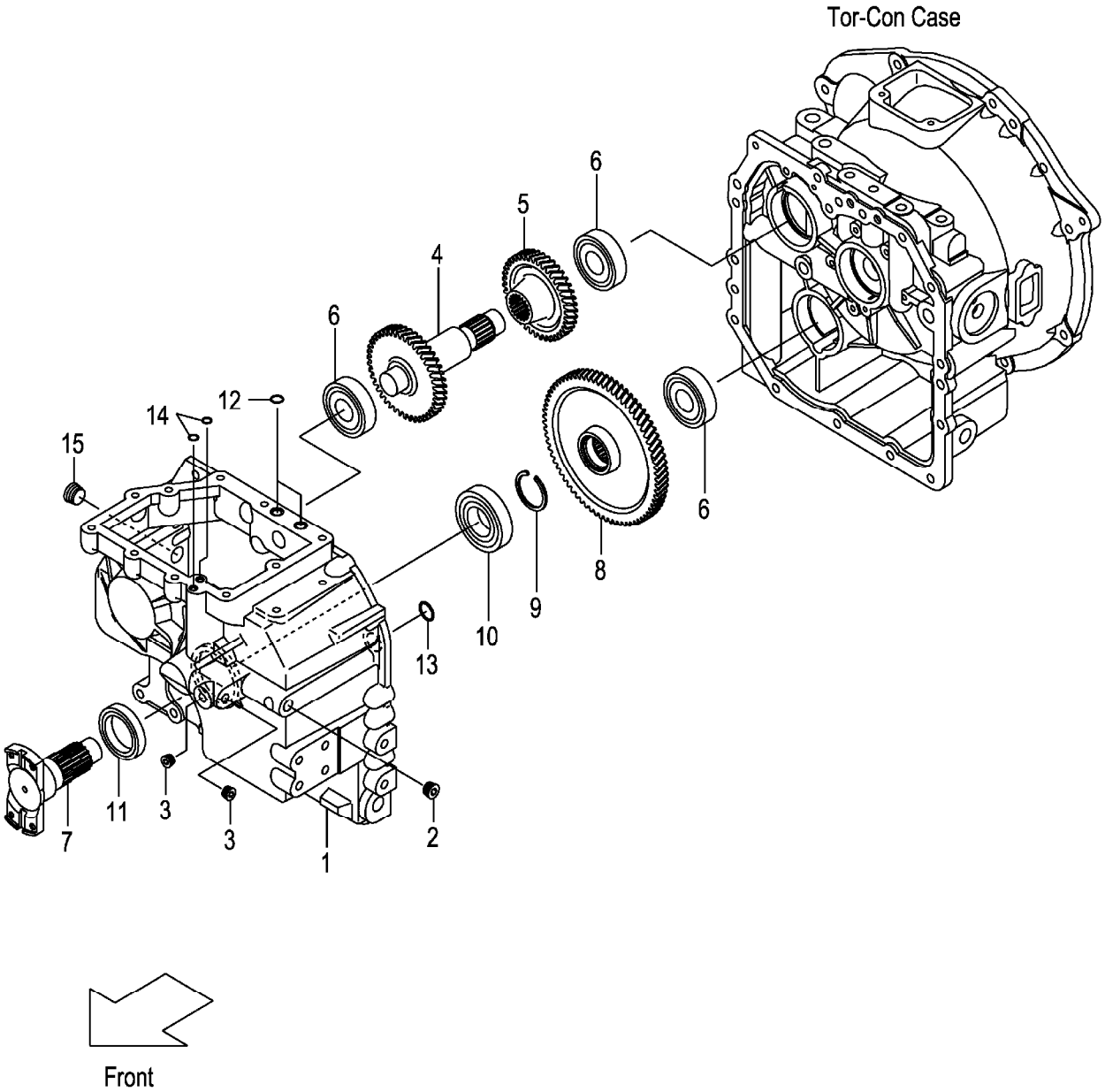

A:FG30T3
B:FD30T3

Item No	Part No.	Mark	Description		Req'd	Remarks : Serial No.
901	12N53-89801	K1	KIT,REPAIR,T/M	ﾘﾍﾟｱｷｯﾄ	1	INC.9,11-14,FIG.65:10,13,18
1	12N53-82091		CASE,T/M	ｹｰｽ	1	
2	24329-45541		PLUG	ﾌﾟﾗｸﾞ	1	
3	116H3-82101		PLUG	ﾌﾟﾗｸﾞ	2	
4	12N53-82151		SHAFT,IDLER	ｼｬﾌﾄ	1	
5	12N53-82161		SHAFT,GEAR	ｼｬﾌﾄ	1	
6	03000-06306		BEARING,BALL	ﾍﾞｱﾘﾝｸﾞ	3	
7	12N53-82201		FLANGE,T/M-OUTPUT	ﾌﾗﾝｼﾞ	1	
8	12N53-82171		GEAR,OUTPUT	ｷﾞﾔｰ	1	
9	02120-00040	*	RING,SNAP	ｽﾅｯﾌﾟﾘﾝｸﾞ	1	
10	03000-06208		BEARING,BALL	ﾍﾞｱﾘﾝｸﾞ	1	
11	12N53-82211	*	SEAL,OIL	ｼｰﾙ	1	
12	15583-82521	*	O-RING	Oﾘﾝｸﾞ	2	
13	15583-82101	*	O-RING	Oﾘﾝｸﾞ	1	
14	15583-82571	*	O-RING	Oﾘﾝｸﾞ	2	
15	12163-82541		PLUG	ﾌﾟﾗｸﾞ	1	

FIG.68 CLUTCH PACK (TOR-CON)

(F70325B0) クラッチパック

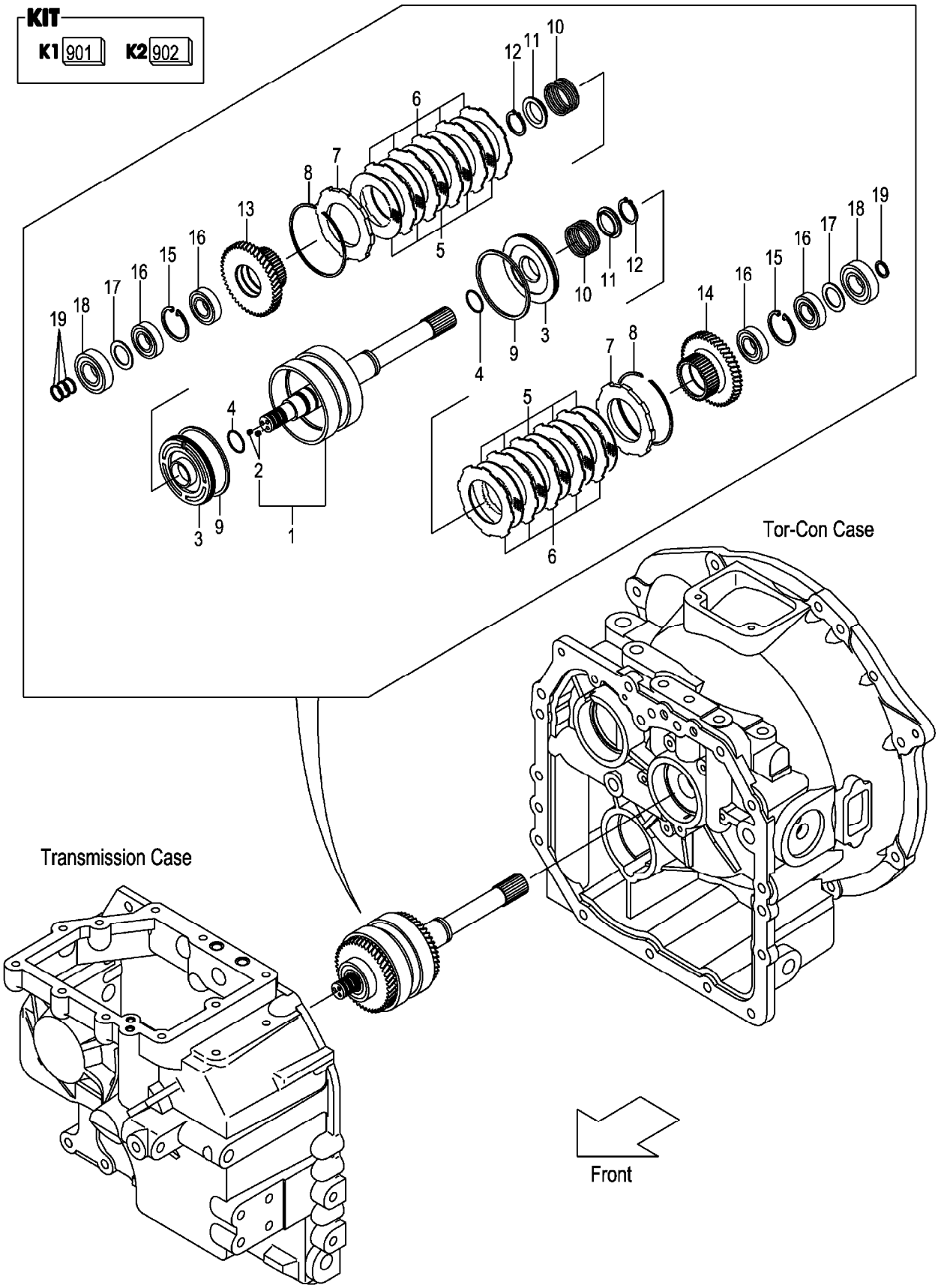

A:FG30T3
B:FD30T3

Item No	Part No.	Mark	Description		Req'd	Remarks : Serial No.
A1	12N53-80201		CLUTCH-ASSY,HYDRAU	ﾊｲﾄﾞﾛｸﾗｯﾁｱｯｾﾝ	1	INC.1-19
901	134G3-89811	K1	KIT,REPAIR,CLUTCH	ﾘﾍﾟｱｷｯﾄ	1	INC.4,8,9,11,12,19
902	134G3-89831	K2	KIT,REPAIR,DISK	ﾘﾍﾟｱｷｯﾄ	1	INC.5,6
1	12N53-82131		SHAFT,INPUT	ｼｬﾌﾄ	1	INC.2
2	01066-08008		PLUG	ﾌﾟﾗｸﾞ	2	
3	134G3-82111		PISTON	ﾋﾟｽﾄﾝ	2	
4	11243-82211	*	O-RING	Oﾘﾝｸﾞ	2	
5	134B3-82401	*	PLATE,FRICTION	ﾌﾟﾚｰﾄ	10	
6	134G3-82121	*	PLATE,MATING	ﾌﾟﾚｰﾄ	10	
7	134G3-82131		END,CLUTCH	ｴﾝﾄﾞ	2	
8	11243-82181	*	RING,SNAP	ｽﾅｯﾌﾟﾘﾝｸﾞ	2	
9	134G3-82141	*	RING,SEAL	ﾘﾝｸﾞ	2	
10	11243-82081		SPRING,RETURN,CLUTCH	ｽﾌﾟﾘﾝｸﾞ	2	
11	11243-82091	*	SHEET,SPRING	ｼｰﾄ	2	
12	02100-00040	*	RING,SNAP	ｽﾅｯﾌﾟﾘﾝｸﾞ	2	
13	12N53-82101		GEAR,FORWARD	ｷﾞﾔｰ	1	
14	12N53-82111		GEAR,REVERSE	ｷﾞﾔｰ	1	
15	02121-00058		RING,SNAP	ｽﾅｯﾌﾟﾘﾝｸﾞ	2	
16	115G3-82351		BEARING,BALL	ﾍﾞｱﾘﾝｸﾞ	4	
17	115G3-82361		PLATE,THRUST	ﾌﾟﾚｰﾄ	2	
18	03000-06306		BEARING,BALL	ﾍﾞｱﾘﾝｸﾞ	2	
19	11243-82161	*	RING,SEAL	ﾘﾝｸﾞ	4	

FIG.69 CONTROL VALVE (TOR-CON)

(F70325C0) コントロールバルブ

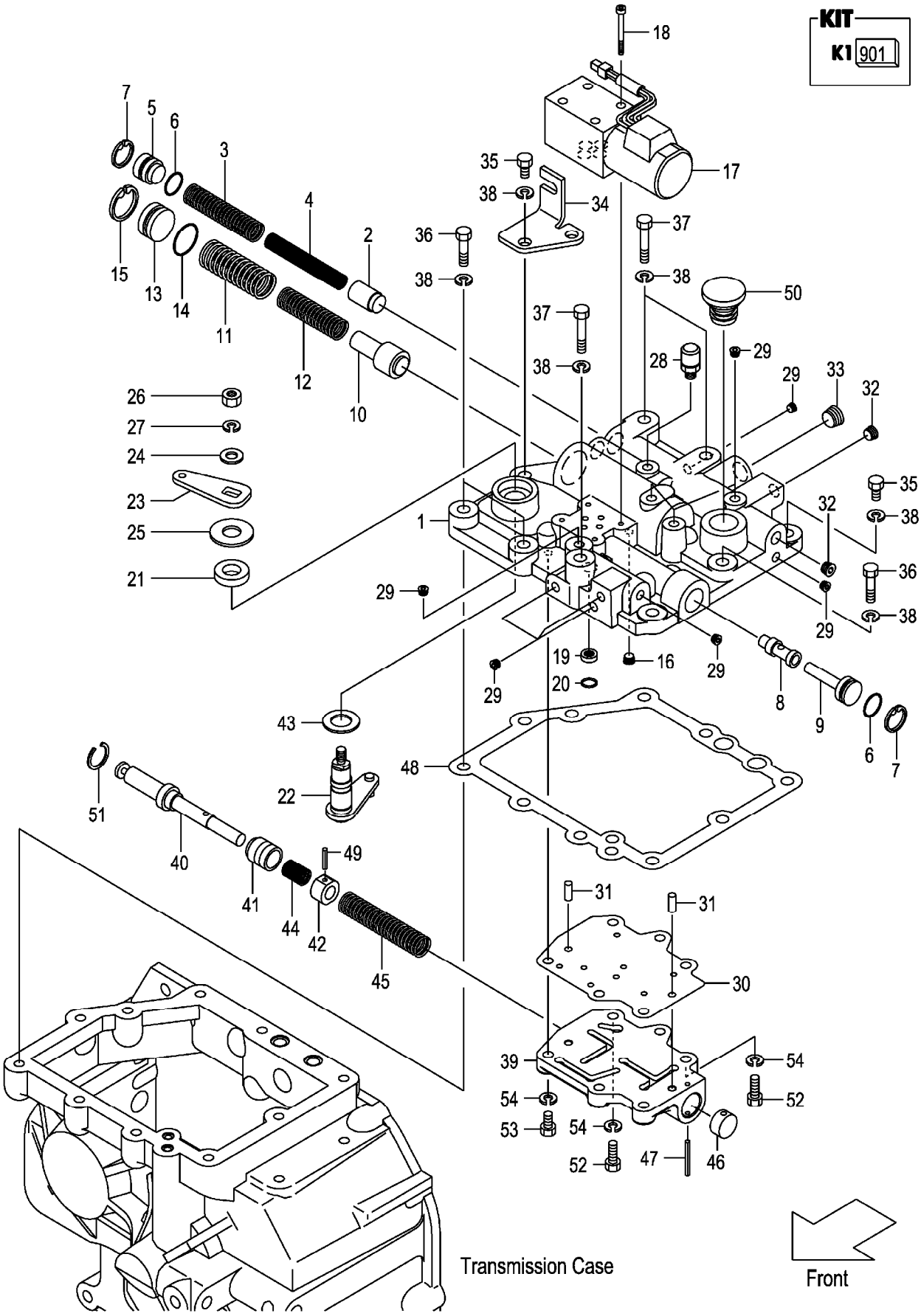

A:FG30T3
B:FD30T3

Item No	Part No.	Mark	Description		Req'd	Remarks : Serial No.
A1	12N53-80341		VALVE-ASSY,CONTROL	ｺﾝﾄﾛｰﾙﾊﾞﾙﾌﾞｱｯｾﾝ	1	INC.1-51
901	12N53-89831	K1	KIT,REPAIR,VALVE	ﾘﾍﾟｱｷｯﾄ	1	INC.6,7,14,15,21,25,30,43, 47,48,51
1	12N53-82221		COVER,CASE	ｶﾊﾞｰ	1	
2	12N53-82291		PISTON,MAIN-RELIEF	ﾋﾟｽﾄﾝ	1	
3	15583-82411		SPRING	ｽﾌﾟﾘﾝｸﾞ	1	
4	15583-82421		SPRING	ｽﾌﾟﾘﾝｸﾞ	1	
5	12N53-82371		PLUG,MAIN-RELIEF	ﾌﾟﾗｸﾞ	1	
6	118H3-82231	*	O-RING	Oﾘﾝｸﾞ	2	
7	02110-00022	*	RING,SNAP	ｽﾅｯﾌﾟﾘﾝｸﾞ	2	
8	139B3-82121		SPOOL	ｽﾌﾟｰﾙ	1	
9	12N53-82351		PLUG,FR-PISTON	ﾌﾟﾗｸﾞ	1	
10	15583-82441		SPOOL,ACC	ｽﾌﾟｰﾙ	1	
11	15583-82451		SPRING	ｽﾌﾟﾘﾝｸﾞ	1	
12	15583-82461		SPRING	ｽﾌﾟﾘﾝｸﾞ	1	
13	12N53-82361		PLUG,ACC	ﾌﾟﾗｸﾞ	1	
14	12N53-82581	*	O-RING	Oﾘﾝｸﾞ	1	
15	02110-00030	*	RING,SNAP	ｽﾅｯﾌﾟﾘﾝｸﾞ	1	
16	115G3-82671		PLUG,CHOKE	ﾌﾟﾗｸﾞ	1	
17	12N53-82551		VALVE,SOLENOID	ﾊﾞﾙﾌﾞ	1	
18	01170-05045		BOLT	ﾎﾞﾙﾄ	4	
19	12N53-82531		FILTER,COIN	ﾌｨﾙﾀ	1	
20	12N53-82571		O-RING	Oﾘﾝｸﾞ	1	
21	12N53-82251	*	SEAL,OIL	ｼｰﾙ	1	
22	12N53-82421		LINK,INCHING	ﾘﾝｸ	1	
23	12N53-82451		PLATE,INCHING	ﾌﾟﾚｰﾄ	1	
24	23656-42601		WASHER	ﾜｯｼｬ	1	
25	12N53-82781	*	WASHER	ﾜｯｼｬ	1	
26	01400-00008		NUT	ﾅｯﾄ	1	
27	02011-00008		WASHER	ﾜｯｼｬ	1	
28	15573-42151		BREATHER,AIR	ﾌﾞﾘｰｻﾞ	1	
29	116H3-82201		PLUG	ﾌﾟﾗｸﾞ	10	
30	12N53-82721	*	PLATE,SEPARATE	ﾌﾟﾚｰﾄ	1	
31	02212-06016		PIN,PARALLEL	ﾋﾟﾝ	2	
32	116H3-82101		PLUG	ﾌﾟﾗｸﾞ	2	
33	24329-45541		PLUG	ﾌﾟﾗｸﾞ	1	
34	12N53-82741		BRACKET,LINK	ﾌﾞﾗｹｯﾄ	1	
35	01103-10030		BOLT	ﾎﾞﾙﾄ	4	
-	01103-10030		BOLT	ﾎﾞﾙﾄ	2	[TPM]
36	01103-10040		BOLT	ﾎﾞﾙﾄ	3	
37	01103-10060		BOLT	ﾎﾞﾙﾄ	3	
38	02011-00010		WASHER	ﾜｯｼｬ	10	
39	12N53-82231		BODY,VALVE	ﾎﾞﾃﾞｨ	1	
40	12N53-82731		SPOOL,INCHING	ｽﾌﾟｰﾙ	1	
41	12N53-82321		PLUNGER	ﾌﾟﾗﾝｼﾞｬ	1	
42	12N53-82331		PISTON	ﾋﾟｽﾄﾝ	1	
43	12N53-82771	*	WASHER	ﾜｯｼｬ	1	
44	12N53-82501		SPRING	ｽﾌﾟﾘﾝｸﾞ	1	
45	12N53-82481		SPRING	ｽﾌﾟﾘﾝｸﾞ	1	
46	12N53-82401		PLUG	ﾌﾟﾗｸﾞ	1	

FIG.69 CONTROL VALVE (TOR-CON)

(F70325C0) コントロールバルブ

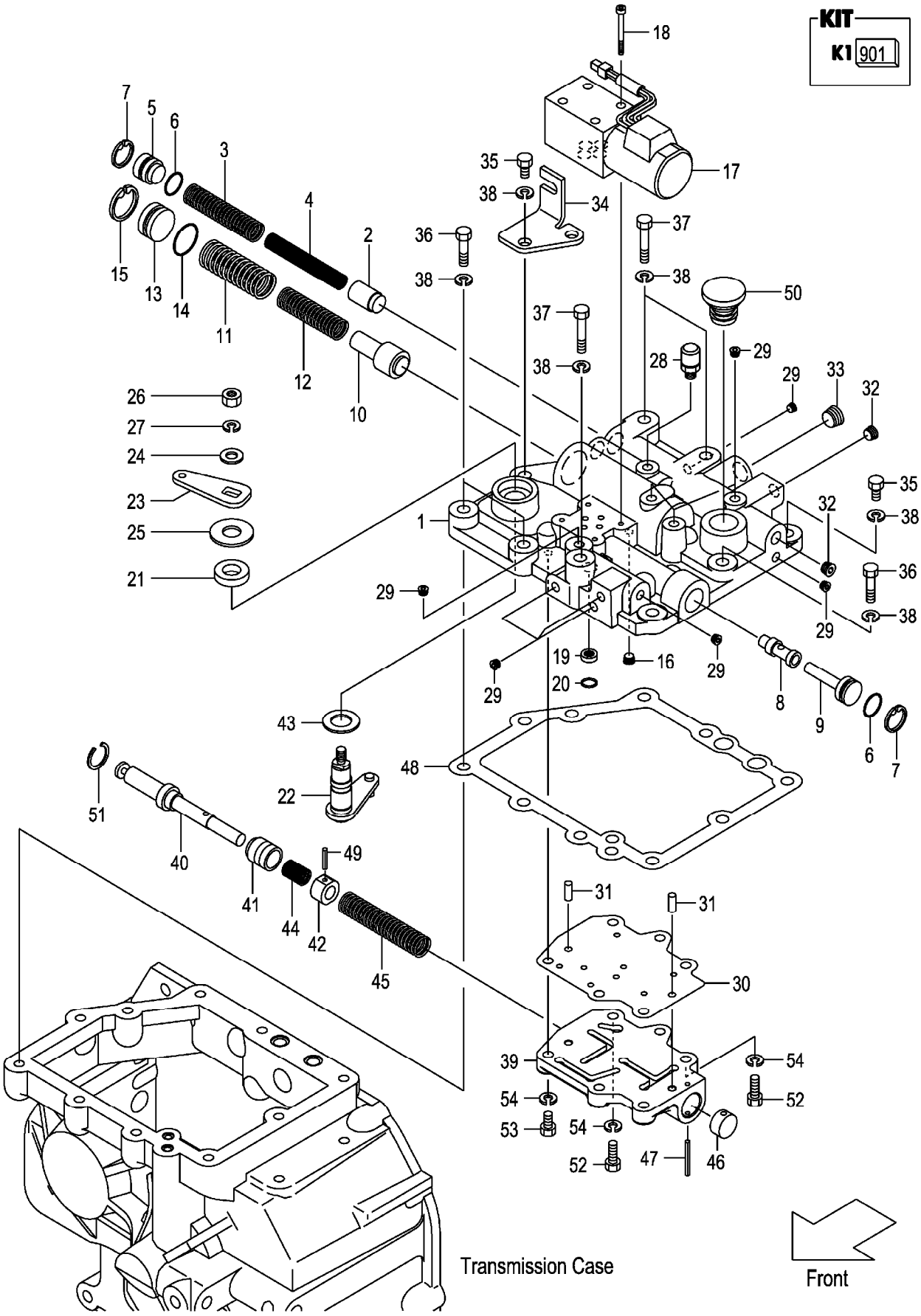

A:FG30T3
B:FD30T3

Item No	Part No.	Mark	Description		Req'd	Remarks : Serial No.
47	02270-04035	*	PIN,SPRING	ﾋﾟﾝ	1	
48	12N53-82701	*	GASKET,CASE-COVER	ｶﾞｽｹｯﾄ	1	
49	02270-04020		PIN,SPRING	ﾋﾟﾝ	1	
50	12N53-82751		CAP,OIL	ｷｬｯﾌﾟ	1	
51	12N53-82791	*	RING,SNAP	ｽﾅｯﾌﾟﾘﾝｸﾞ	1	
52	01103-08040		BOLT	ﾎﾞﾙﾄ	2	
53	01103-08030		BOLT	ﾎﾞﾙﾄ	4	
54	02011-00008		WASHER	ﾜｯｼｬ	6	

M E M O

M E M O

FIG.70 CLUTCH (OIL CLUTCH)

(F70325D0) クラッチ

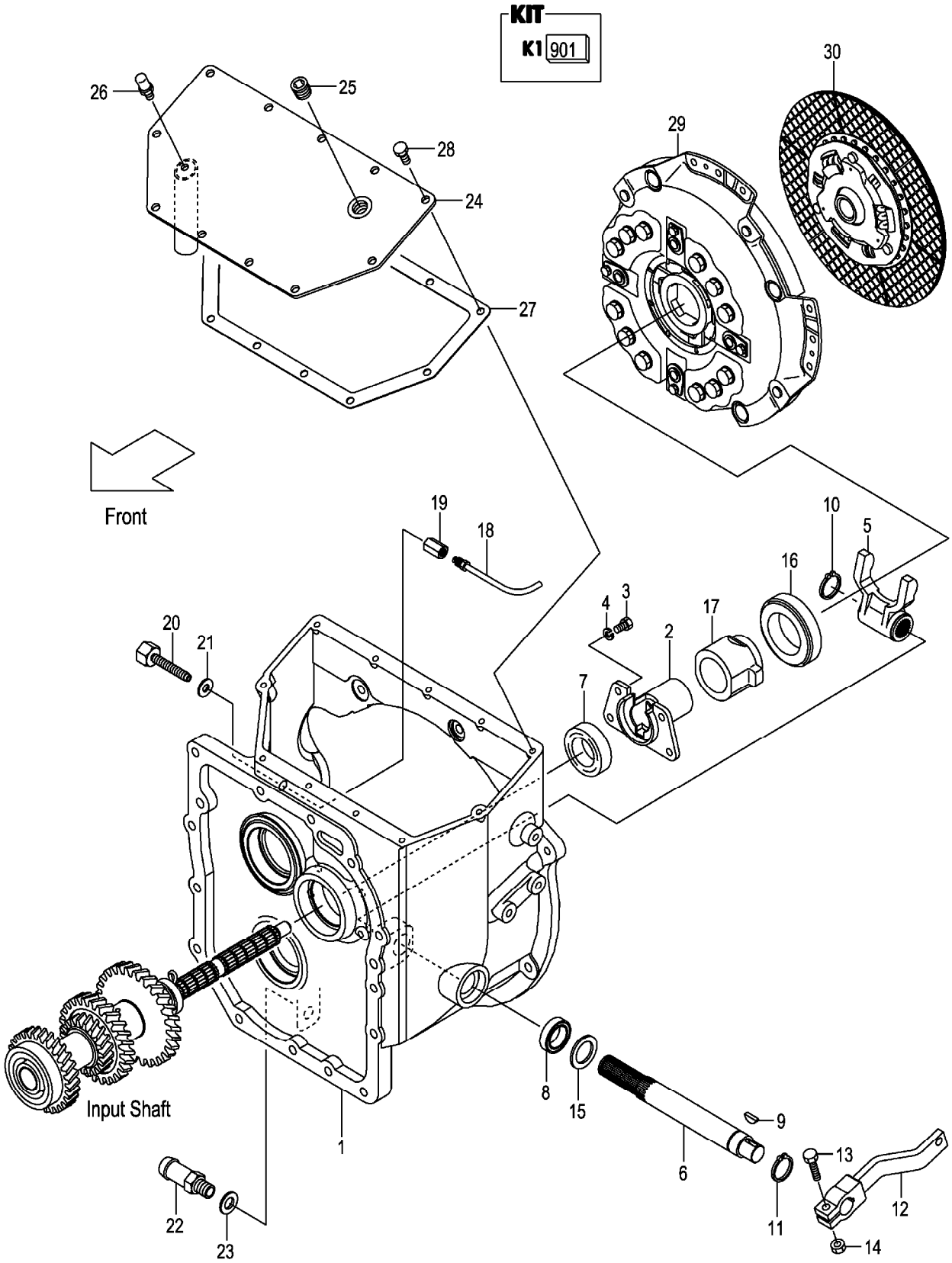

A:FG30W3
B:FD30W3

Item No	Part No.	Mark	Description		Req'd	Remarks : Serial No.
901	12P43-19801	K1	KIT,REPAIR,T/M	ﾘﾍﾟｱｷｯﾄ	1	INC.7-11,21,23,FIG.64:2, 7,14,32,35,38
1	12P43-12301		HOUSING,CLUTCH	ﾊｳｼﾞﾝｸﾞ	1	
2	12N43-12021		SUPPORT,RETAINER	ｻﾎﾟｰﾄ	1	
3	01103-08016		BOLT	ﾎﾞﾙﾄ	4	
4	02011-00008		WASHER	ﾜｯｼｬ	4	
5	12N43-12101		YOKE	ﾖｰｸ	1	
6	12P43-12021		SHAFT	ｼｬﾌﾄ	1	
7	12P43-12011	*	SEAL,OIL	ｼｰﾙ	1	
8	19502-52552	*	SEAL,OIL	ｼｰﾙ	1	
9	02360-05019	*	KEY	ｷｰ	1	
10	02100-00025	*	RING,SNAP	ｽﾅｯﾌﾟﾘﾝｸﾞ	1	
11	02100-00028	*	RING,SNAP	ｽﾅｯﾌﾟﾘﾝｸﾞ	1	
12	12P43-12031		ARM	ｱｰﾑ	1	
13	01183-08035		BOLT	ﾎﾞﾙﾄ	1	
14	01400-00008		NUT	ﾅｯﾄ	1	
15	02000-00027		WASHER	ﾜｯｼｬ	1	
16	55593-62061		BEARING,THRUST	ﾍﾞｱﾘﾝｸﾞ	1	
17	12P43-12051		RETAINER,BEARING	ﾘﾃｰﾅ	1	
18	12P43-12061		NOZZLE,SPRAY	ﾉｽﾞﾙ	1	
19	131N3-12031		ADAPTER	ｱﾀﾞﾌﾟﾀ	1	
20	12P43-12081		ADAPTER	ｱﾀﾞﾌﾟﾀ	1	
21	15943-82701	*	WASHER	ﾜｯｼｬ	1	
22	131N3-12151		FITTING,HOSE	ﾌｨｯﾃｨﾝｸﾞ	1	
23	22197-52091	*	WASHER	ﾜｯｼｬ	1	
24	12P43-12111		COVER,CLUTCH-HOUSING	ｶﾊﾞｰ	1	
25	12163-82541		PLUG	ﾌﾟﾗｸﾞ	1	
26	15573-42151		BREATHER,AIR	ﾌﾞﾘｰｻﾞ	1	
27	12P43-12141		GASKET	ｶﾞｽｹｯﾄ	1	
28	01183-08016		BOLT	ﾎﾞﾙﾄ	11	
29	134H3-10201		COVER,CLUTCH	ｶﾊﾞｰ	1	
30	55593-60301		DISK,CLUTCH	ﾃﾞｨｽｸ	1	A
-	134H3-10211		DISK,CLUTCH	ﾃﾞｨｽｸ	1	B

FIG.71 SPOT LIGHT [SPL]

(F7032640) スポットライト

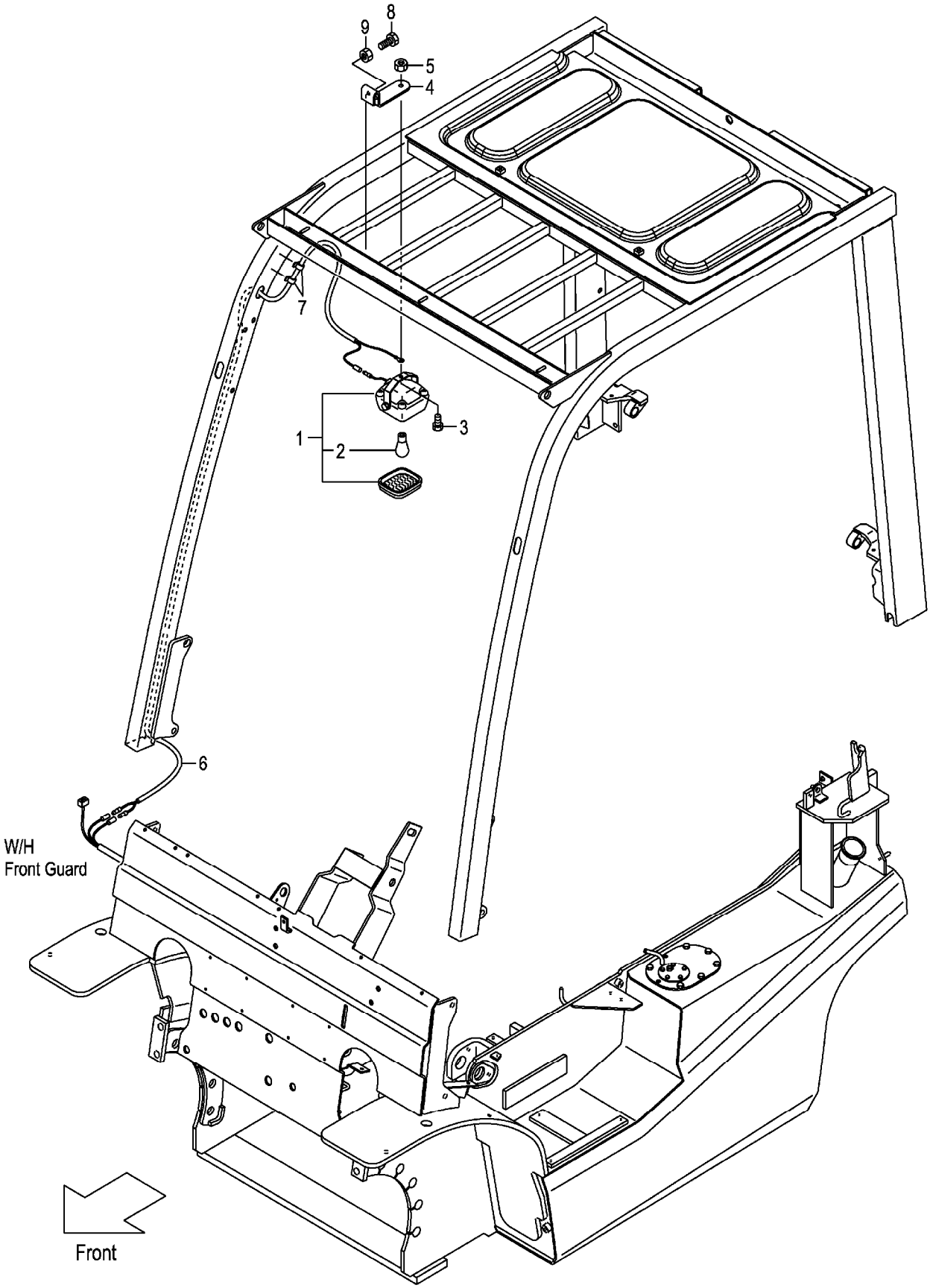

A:FG30C3 FG30T3 FG30W3
B:FD30C3 FD30T3 FD30W3

Item No	Part No.	Mark	Description		Req'd	Remarks : Serial No.
1	516G9-10101		LAMP	ﾗﾝﾌﾟ	1	[SPL] INC.2
2	516G9-12011		BULB,12V/18.2W	ﾊﾞﾙﾌﾞ	1	[SPL]
3	01185-08016		BOLT	ﾎﾞﾙﾄ	1	[SPL]
4	52N59-02001		BRACKET,SPOT-LAMP	ﾌﾞﾗｹｯﾄ	1	[SPL]
5	01400-00008		NUT	ﾅｯﾄ	1	[SPL]
6	539A9-02011		WIRE-HARNESS,SPOT-L.	ﾜｲﾔﾊｰﾈｽ	1	[SPL]
7	27732-42311		CLAMP,HARNESS	ｸﾗﾝﾌﾟ	2	[SPL]
8	01100-08025		BOLT	ﾎﾞﾙﾄ	2	[SPL]
9	01402-00008		NUT	ﾅｯﾄ	2	[SPL]

FIG.72 FAN [FAN]

(F7032650) ファン

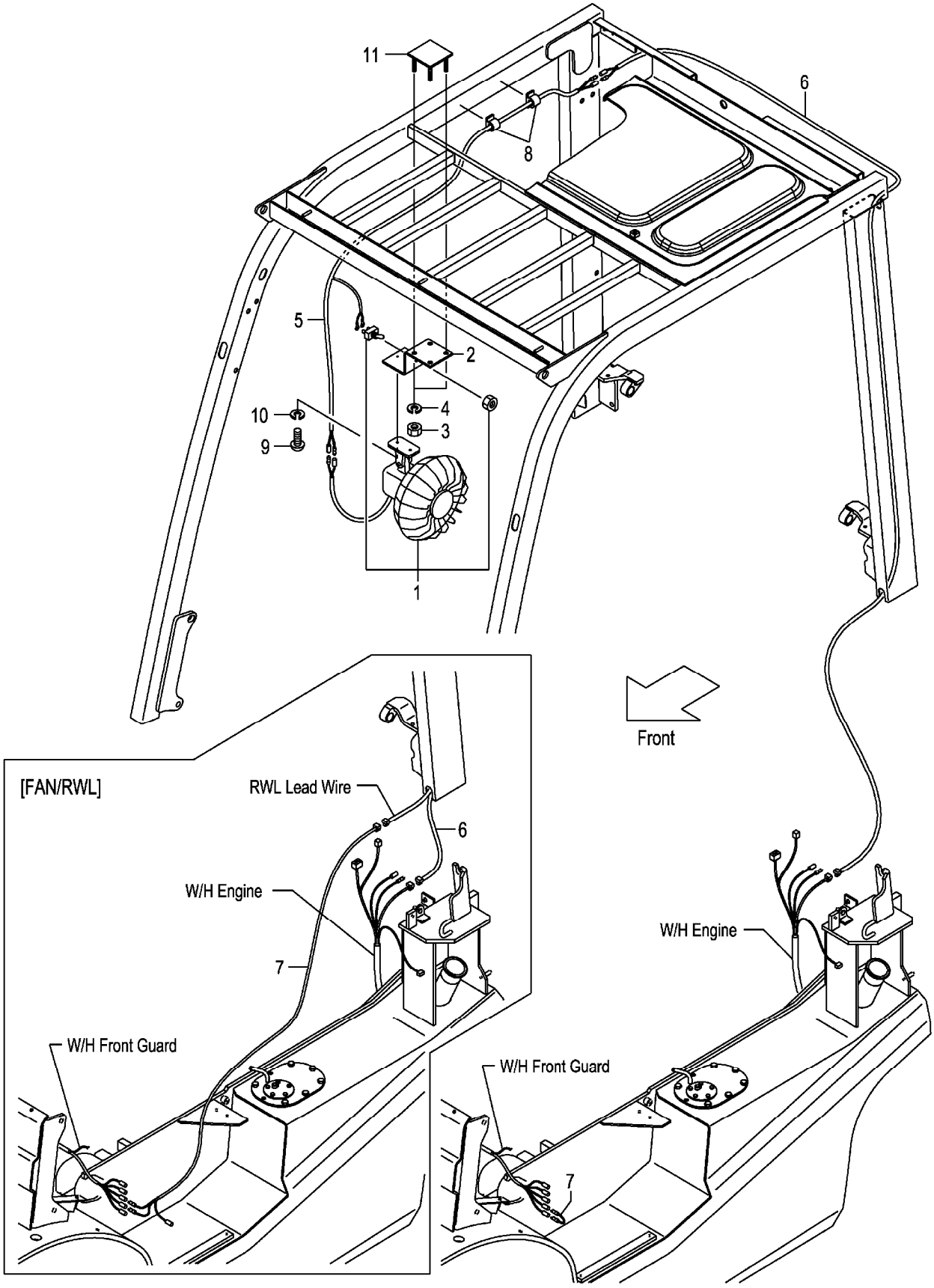

A:FG30C3 FG30T3 FG30W3
B:FD30C3 FD30T3 FD30W3

Item No	Part No.	Mark	Description		Req'd	Remarks : Serial No.
1	514A5-32341		FAN,CAR	ﾌｧﾝ	1	[FAN]
2	52N58-22001		BRACKET,FAN	ﾌﾞﾗｹｯﾄ	1	[FAN](WITHOUT FAN/SCB001)
3	01400-00008		NUT	ﾅｯﾄ	4	[FAN](WITHOUT FAN/SCB001)
4	02010-00008		WASHER	ﾜｯｼｬ	4	[FAN](WITHOUT FAN/SCB001)
5	539A8-22151		WIRE-HARNESS,FAN	ﾜｲﾔﾊｰﾈｽ	1	[FAN](WITHOUT FAN/SCB001)
6	516G1-42111		WIRE,LEAD	ﾜｲﾔ	1	[FAN](WITHOUT FAN/SCB001)
7	516G1-42211		WIRE,LEAD	ﾜｲﾔ	1	[FAN](WITHOUT FAN/SCB001)
-	514A1-42041		WIRE,LEAD	ﾜｲﾔ	1	[FAN/RWL]
8	27732-42311		CLAMP,HARNESS	ｸﾗﾝﾌﾟ	4	[FAN](WITHOUT FAN/SCB001)
9	01030-04014		SCREW	ｽｸﾘｭ	2	[FAN]
-	01044-04014		SCREW	ｽｸﾘｭ	2	[FAN/SCB001]
10	02010-00004		WASHER	ﾜｯｼｬ	2	[FAN](WITHOUT FAN/SCB001)
11	52N58-22101		BRACKET,FAN	ﾌﾞﾗｹｯﾄ	1	[FAN](WITHOUT FAN/SCB001)
12	209K2-42351	+	RELAY,1A	ﾘﾚｰ	1	[FAN/SCB001]

FIG.73 LIFT LOCK VALVE WIRE HARNESS [VLL]

(F7032660) ﾘﾌﾄﾛｯｸﾊﾞﾙﾌﾞﾜｲﾔﾊｰﾈｽ

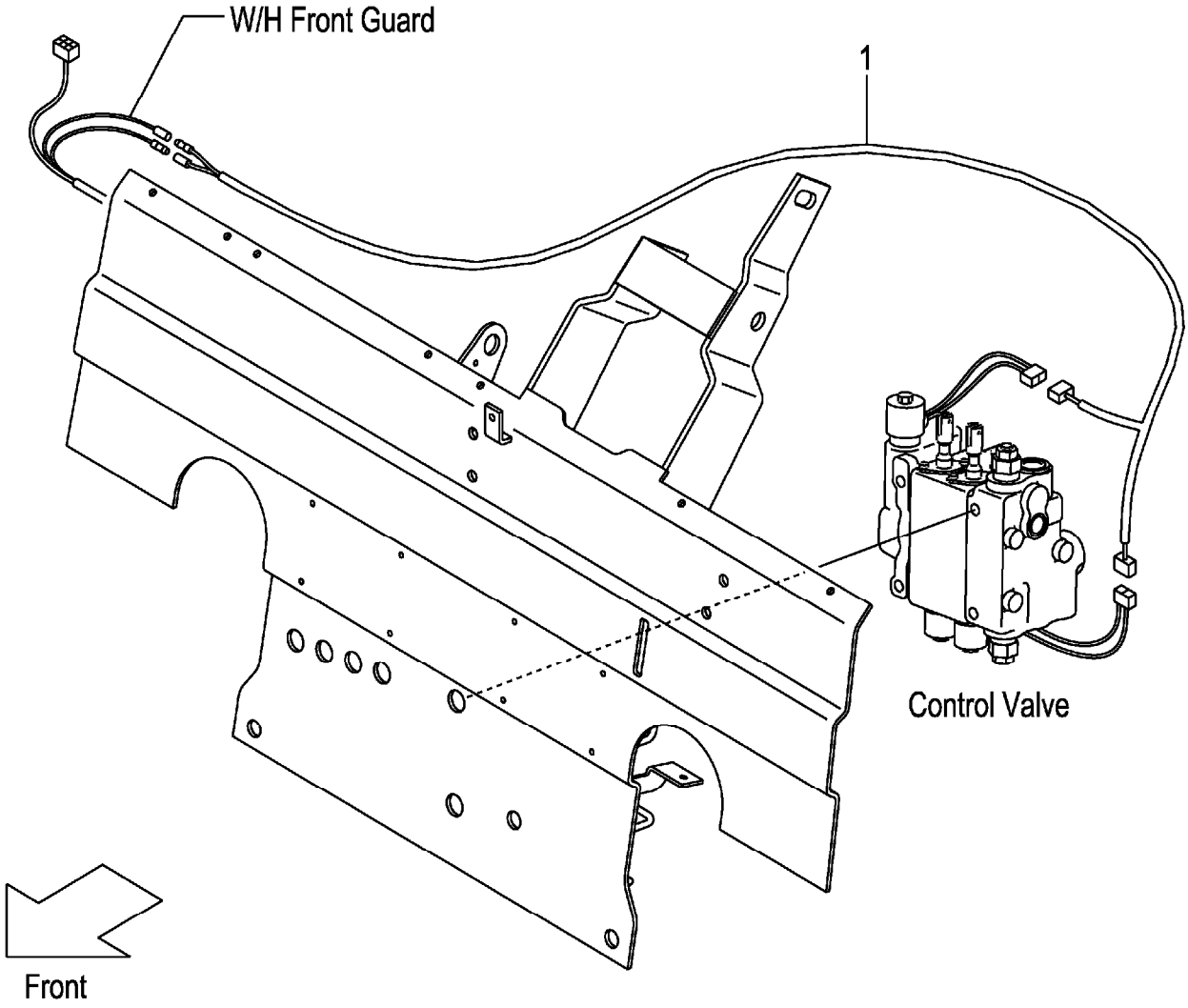

FIG.73

A:FG30C3 FG30T3 FG30W3
B:FD30C3 FD30T3 FD30W3

(F7032660)

Item No	Part No.	Mark	Description	Req'd	Remarks : Serial No.
1	52N56-72001		WIRE-HARNESS,VLL ﾜｲﾔﾊｰﾈｽ	1	[VLL] (WITHOUT VLL/SIL,VLL/EXE, VLL/EXN)

FIG.74 AMMETER [AM]

(F70326A0) アンメータ

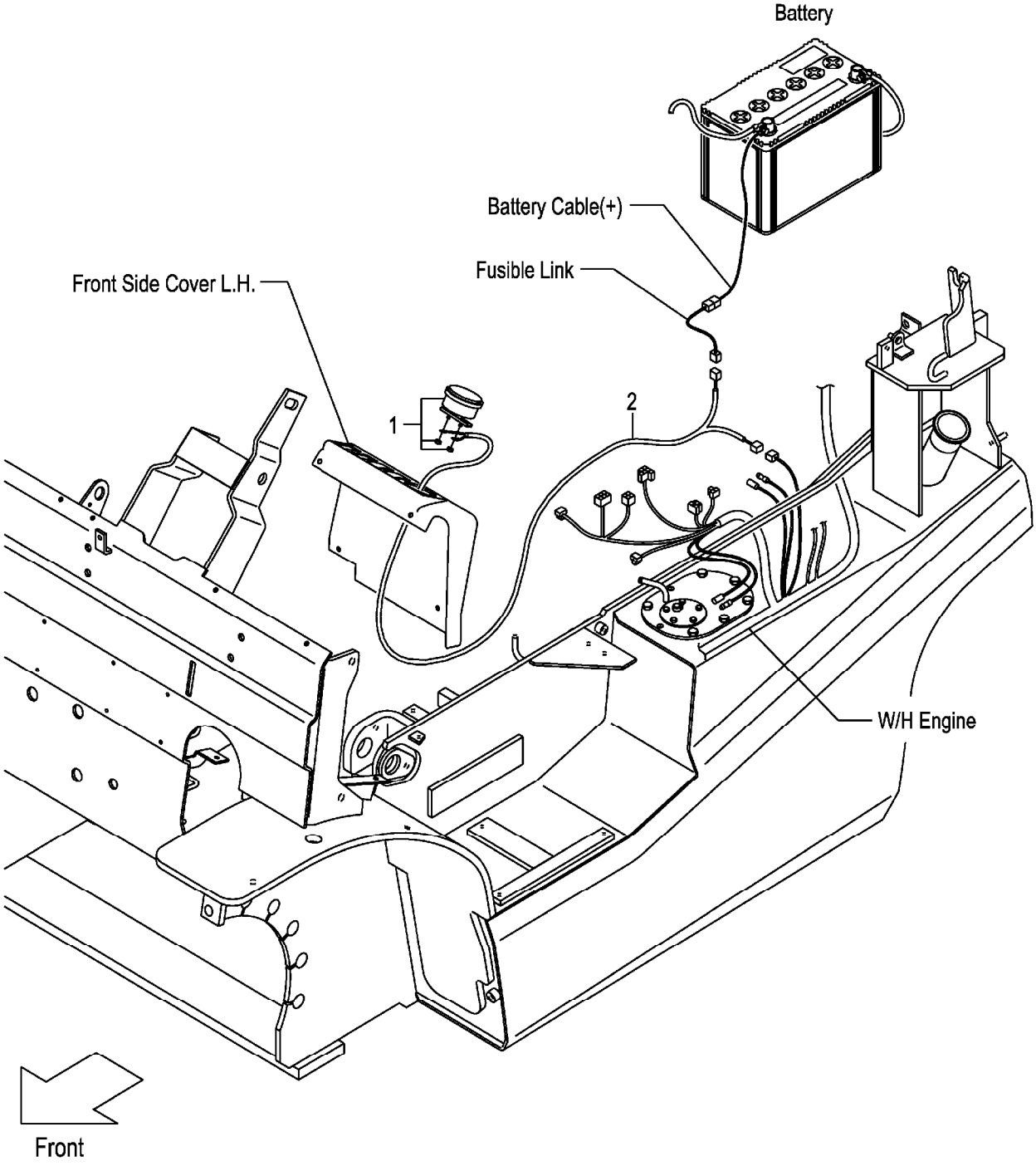

A:FG30C3 FG30T3 FG30W3
B:FD30C3 FD30T3 FD30W3

Item No	Part No.	Mark	Description	Req'd	Remarks : Serial No.
1	3956323		AMMETER,50A アンメータ	1	[AM]
2	52N56-12051		WIRE,LEAD,AMMETER ワイヤ	1	[AM]

FIG.75 SPEED METER [SM]

(F70326B0) ｽﾋﾟｰﾄﾞﾒｰﾀ

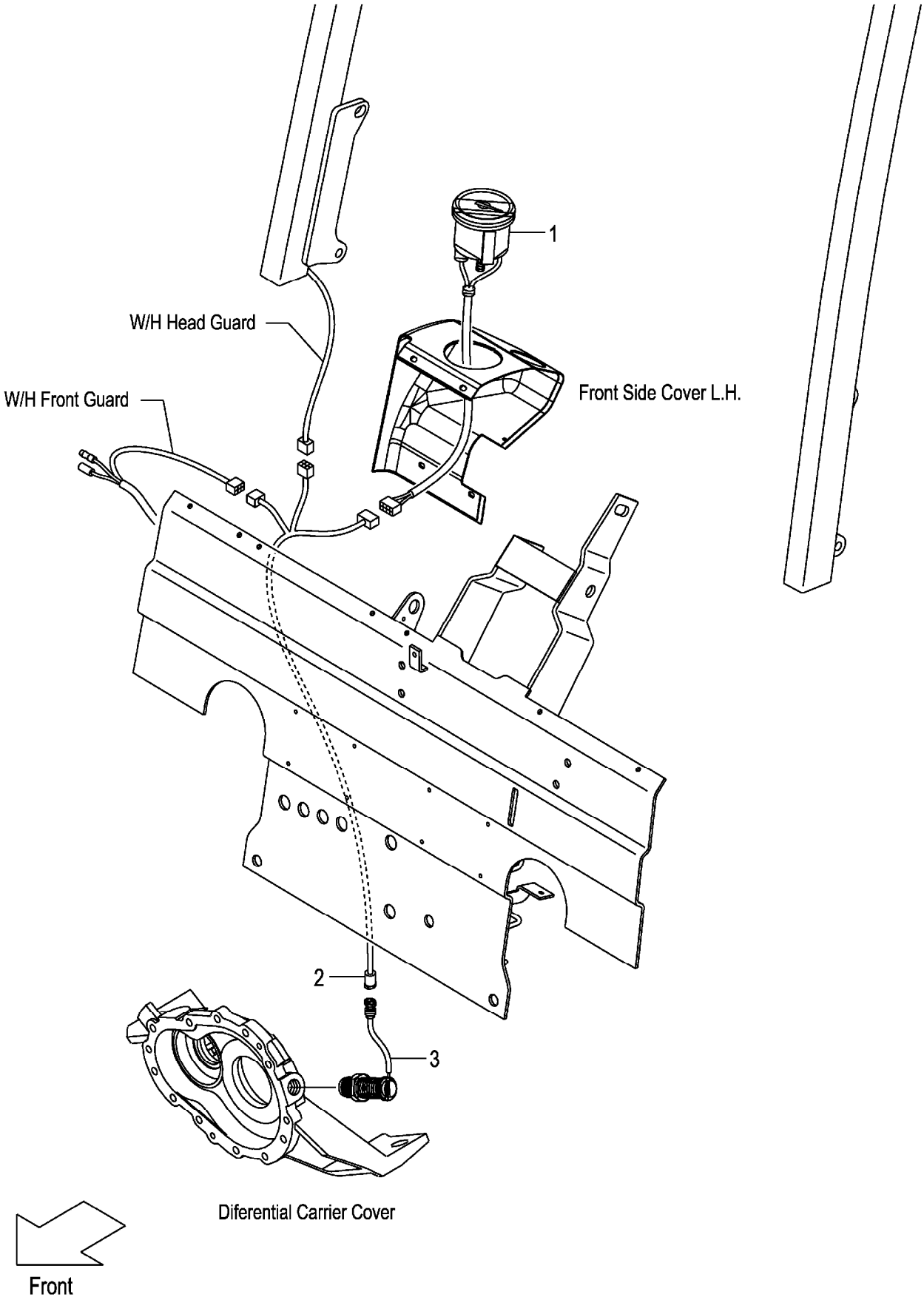

A:FG30C3 FG30T3 FG30W3
B:FD30C3 FD30T3 FD30W3

Item No	Part No.	Mark	Description		Req'd	Remarks : Serial No.
1	52N57-50101		METER,SPEED	ﾒｰﾀ	1	[SM]
2	52N57-50301		WIRE-HARNESS,SM	ﾜｲﾔﾊｰﾈｽ	1	[SM]
3	16402-54331		SENSOR	ｾﾝｻ	1	[SM]

FIG.76 TORQUE CONVERTER THERMOMETER [TTM]

(F70326C0) トルクコンバータサーモメータ

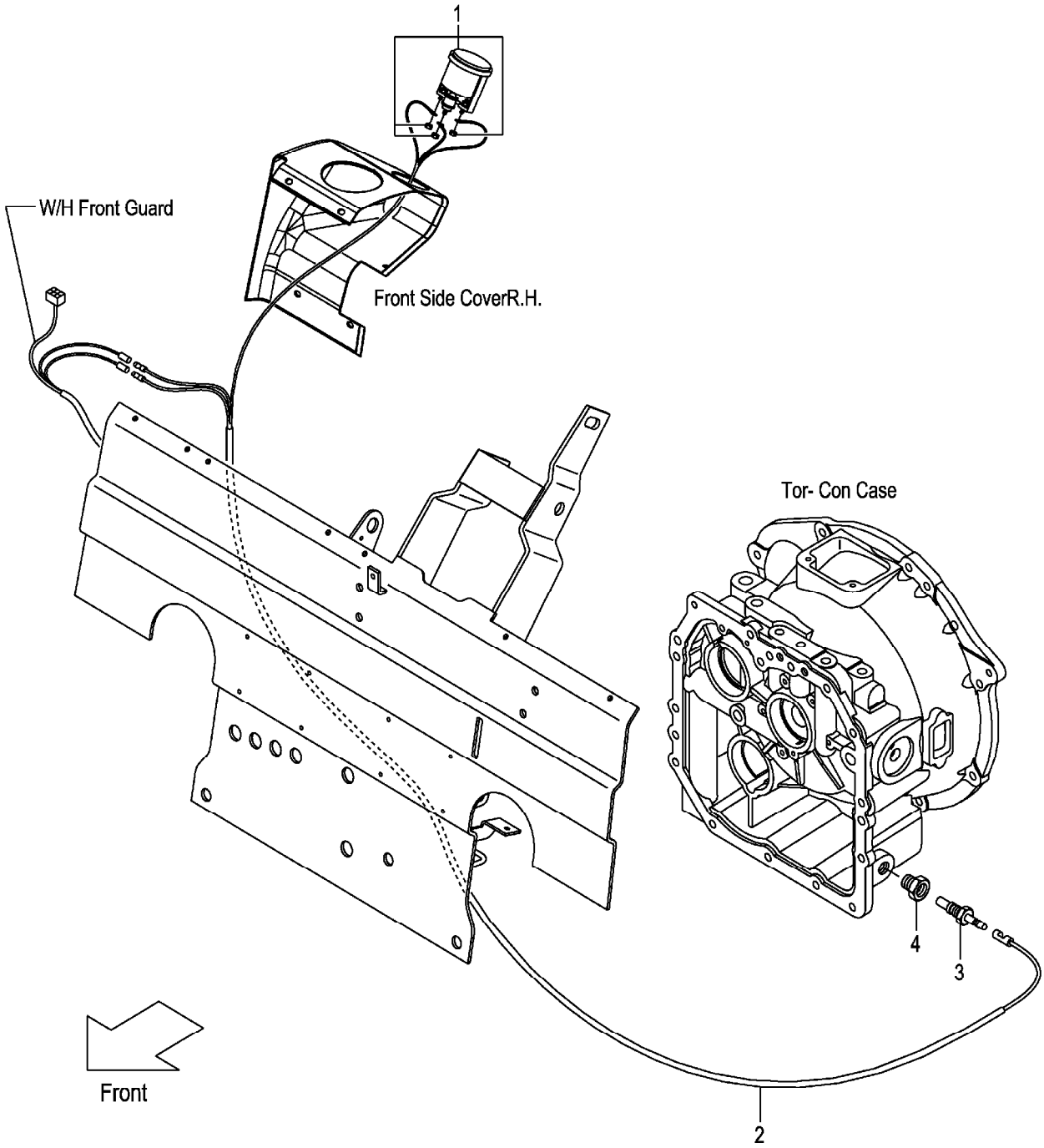

A:FG30T3
B:FD30T3

Item No	Part No.	Mark	Description		Req'd	Remarks : Serial No.
1	52N58-82001		THERMOMETER	ｻｰﾓﾒｰﾀ	1	[TTM]
2	52N58-82101		WIRE-HARNESS,TTM	ﾜｲﾔﾊｰﾈｽ	1	[TTM]
3	23652-44001		UNIT,SENDING	ﾕﾆｯﾄ	1	[TTM]
4	521A2-42061		ADAPTER,THERMO-SW.	ｱﾀﾞﾌﾟﾀ	1	[TTM]

FIG.77 TORQUE CONVERTER PRESSURE METER [TPM]

(F70326D0) トルクコンバータプレッシャメータ

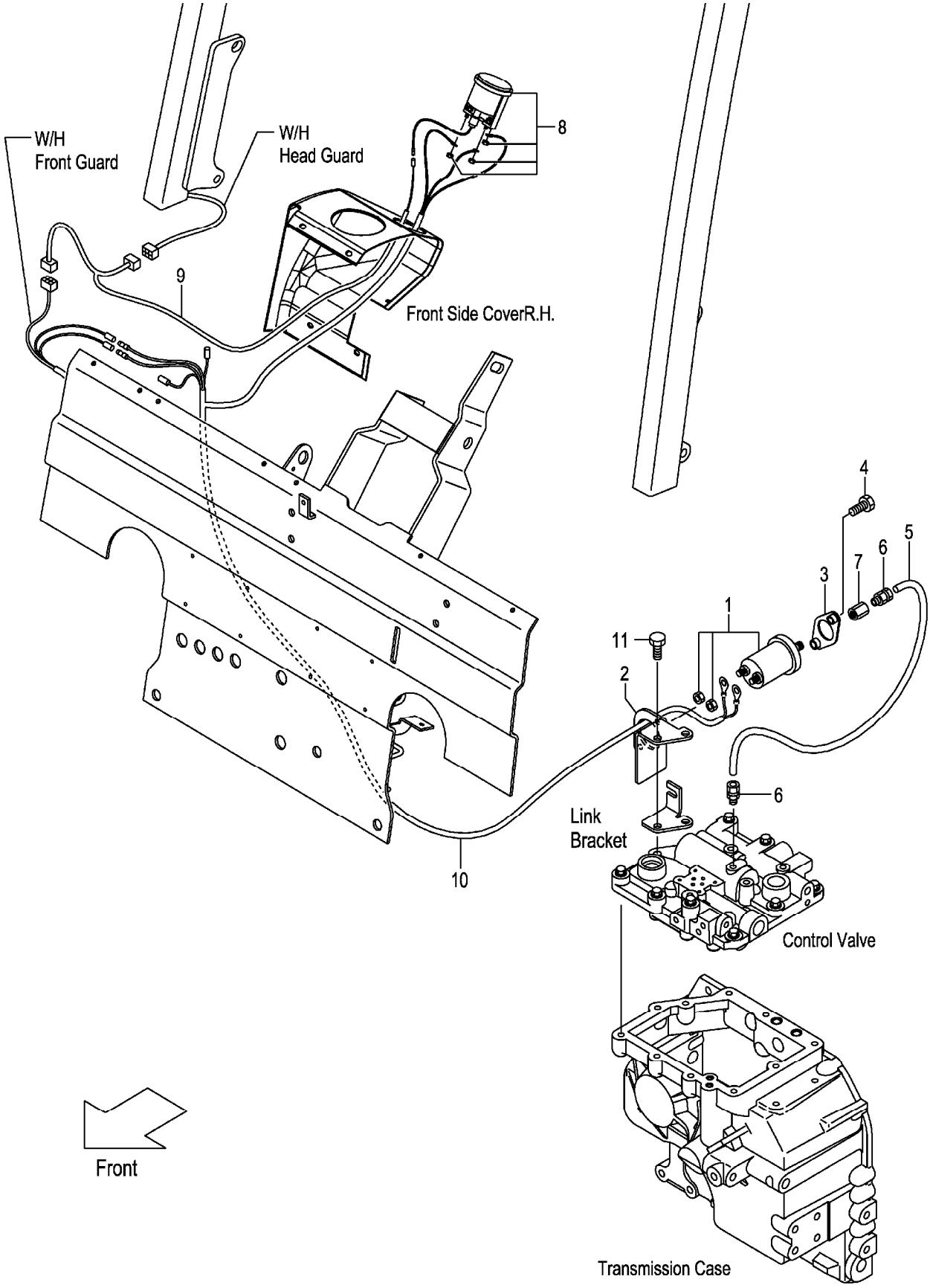

A:FG30T3
B:FD30T3

Item No	Part No.	Mark	Description		Req'd	Remarks : Serial No.
1	516G6-92001		SENSOR,PRESS.GAUGE	ｾﾝｻ	1	[TPM]
2	52N56-92101		BRACKET,SENSOR	ﾌﾞﾗｹｯﾄ	1	[TPM]
3	516G6-92151		COVER,SENSOR	ｶﾊﾞｰ	1	[TPM]
4	01186-08025		BOLT	ﾎﾞﾙﾄ	2	[TPM]
5	52N56-92001		PIPE,CAPPER	ﾊﾟｲﾌﾟ	1	[TPM]
6	516G6-92011		JOINT	ｼﾞｮｲﾝﾄ	2	[TPM]
7	516G6-92031		ADAPTER	ｱﾀﾞﾌﾟﾀ	1	[TPM]
8	516G6-92022		GAUGE,PRESSURE	ｹﾞｰｼﾞ	1	[TPM]
9	52N56-92211		WIRE-HARNESS	ﾜｲﾔﾊｰﾈｽ	1	[TPM]
10	52N56-92201		WIRE-HARNESS,TPM	ﾜｲﾔﾊｰﾈｽ	1	[TPM]
11	01103-10035		BOLT	ﾎﾞﾙﾄ	2	[TPM]

FIG.78 SPEED DETECTOR UNIT [SAS]

(F70326E0) ｽﾋﾟｰﾄﾞﾃﾞｨﾃｸﾀﾕﾆｯﾄ

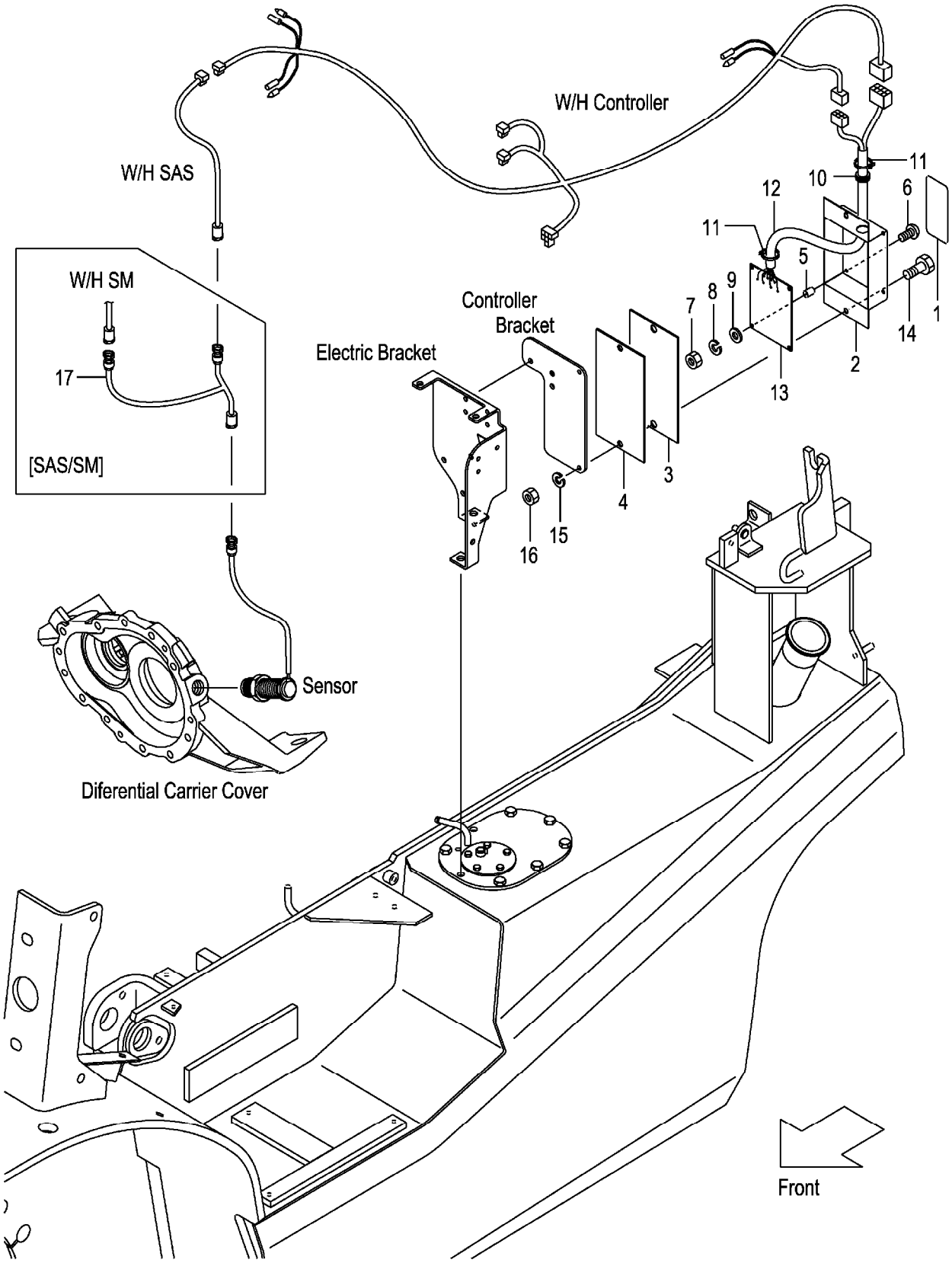

A:FG30C3 FG30T3 FG30W3
B:FD30C3 FD30T3 FD30W3

Item No	Part No.	Mark	Description		Req'd	Remarks : Serial No.
A1	52N57-52051		UNIT-ASSY,SPEED-DETECTOR	ｽﾋﾟｰﾄﾞﾃﾞﾃｸﾀﾕﾆｯﾄｱｯｾﾝ	1	[SASB05][SASR05][SASC05] INC.1-16
-	52N57-52101		UNIT-ASSY,SPEED-DETECTOR	ｽﾋﾟｰﾄﾞﾃﾞﾃｸﾀﾕﾆｯﾄｱｯｾﾝ	1	[SASB10][SASR10][SASC10] INC.1-16
-	52N57-52151		UNIT-ASSY,SPEED-DETECTOR	ｽﾋﾟｰﾄﾞﾃﾞﾃｸﾀﾕﾆｯﾄｱｯｾﾝ	1	[SASB15][SASR15][SASC15] INC.1-16
1	52N57-52061		PLATE,NAME	ﾌﾟﾚｰﾄ	1	[SASB05][SASR05][SASC05]
-	52N57-52111		PLATE,NAME	ﾌﾟﾚｰﾄ	1	[SASB10][SASR10][SASC10]
-	52N57-52161		PLATE,NAME	ﾌﾟﾚｰﾄ	1	[SASB15][SASR15][SASC15]
2	55792-52601		CASE	ｹｰｽ	1	[SASB05&10&15][SASR05&10&15] [SASC05&10&15]
3	55792-52611		SEAT,SPONG	ｼｰﾄ	1	[SASB05&10&15][SASR05&10&15] [SASC05&10&15]
4	55792-52621		PLATE	ﾌﾟﾚｰﾄ	1	[SASB05&10&15][SASR05&10&15] [SASC05&10&15]
5	27042-64311		SPACER	ｽﾍﾟｰｻ	4	[SASB05&10&15][SASR05&10&15] [SASC05&10&15]
6	01030-04020		SCREW	ｽｸﾘｭ	4	[SASB05&10&15][SASR05&10&15] [SASC05&10&15]
7	01400-00004		NUT	ﾅｯﾄ	4	[SASB05&10&15][SASR05&10&15] [SASC05&10&15]
8	02010-00004		WASHER	ﾜｯｼｬ	4	[SASB05&10&15][SASR05&10&15] [SASC05&10&15]
9	02000-00004		WASHER	ﾜｯｼｬ	4	[SASB05&10&15][SASR05&10&15] [SASC05&10&15]
10	205A2-63311		GROMMET	ｸﾞﾛﾒｯﾄ	1	[SASB05&10&15][SASR05&10&15] [SASC05&10&15]
11	27042-42312		BAND,CABLE	ﾊﾞﾝﾄﾞ	2	[SASB05&10&15][SASR05&10&15] [SASC05&10&15]
12	55792-52641		WIRE-HARNESS,ATC	ﾜｲﾔﾊｰﾈｽ	1	[SASB05&10&15][SASR05&10&15] [SASC05&10&15]
13	130C2-60302		BOARD,PRINTED	ﾎﾞｰﾄﾞ	1	[SASB05&10&15][SASR05&10&15] [SASC05&10&15]
14	01100-06020		BOLT	ﾎﾞﾙﾄ	2	[SASB05&10&15][SASR05&10&15] [SASC05&10&15]
15	02010-00006		WASHER	ﾜｯｼｬ	2	[SASB05&10&15][SASR05&10&15] [SASC05&10&15]
16	01400-00006		NUT	ﾅｯﾄ	2	[SASB05&10&15][SASR05&10&15] [SASC05&10&15]
17	539A7-52041		WIRE-HARNESS,SAS/SM	ﾜｲﾔﾊｰﾈｽ	1	[SAS/SM]

FIG.79 SPEED ALARM SYSTEM [SASB]

(F70326F0) ｽﾋﾟｰﾄﾞｱﾗｰﾑｼｽﾃﾑ

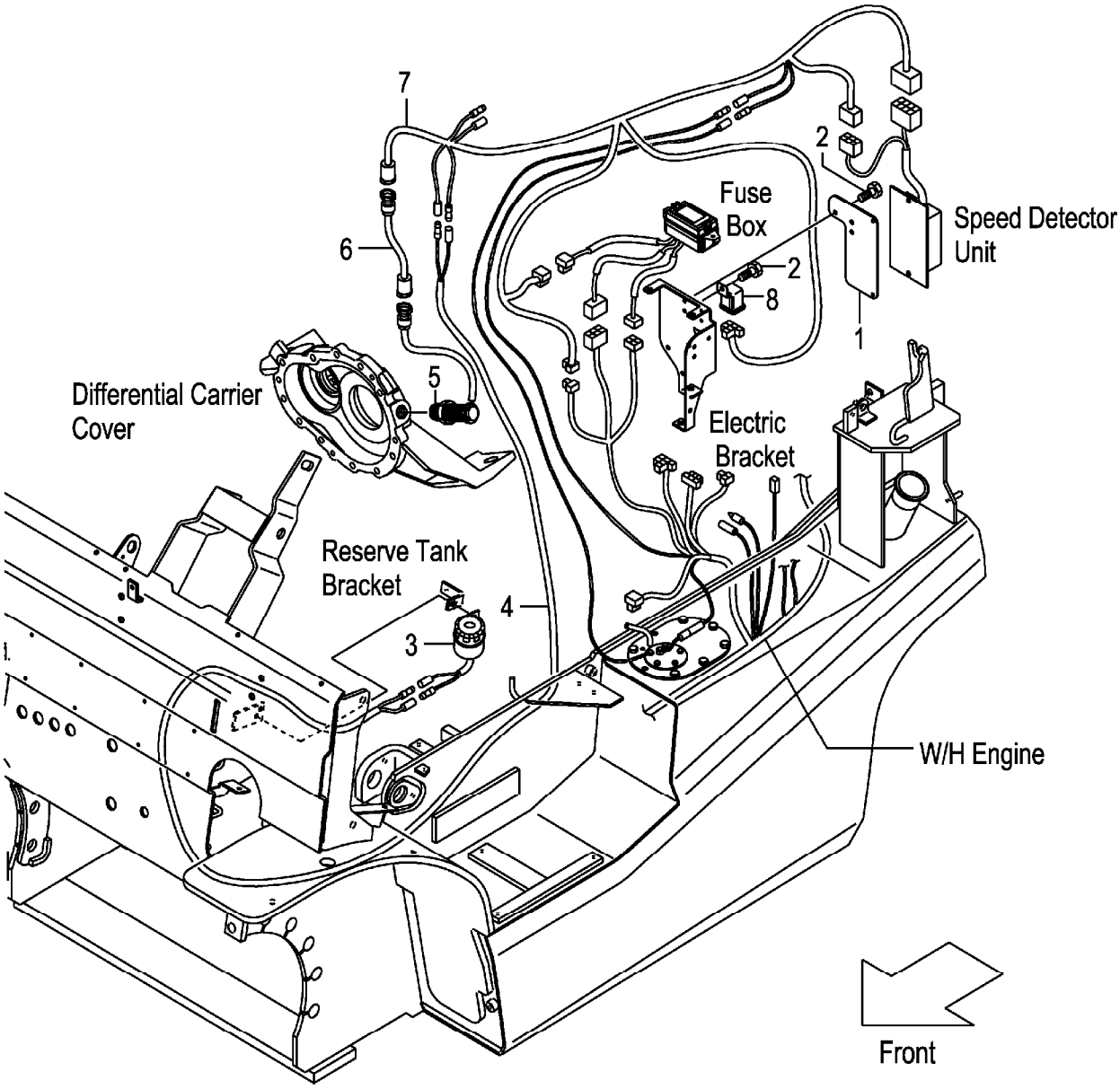

A:FG30C3 FG30T3 FG30W3
B:FD30C3 FD30T3 FD30W3

Item No	Part No.	Mark	Description	Req'd	Remarks : Serial No.
1	52N57-52001		BRACKET,CONTROLLER ﾌﾞﾗｹｯﾄ	1	[SASB05][SASB10][SASB15]
2	214A2-42621		SCREW ｽｸﾘｭ	4	[SASB05][SASB10][SASB15]
3	529F7-52241		ALARM,BUZZER ｱﾗｰﾑ	1	[SASB05][SASB10][SASB15]
4	558A9-92001		WIRE-HARNESS,LICENCE ﾜｲﾔﾊｰﾈｽ	1	[SASB05][SASB10][SASB15]
5	16402-54331		SENSOR ｾﾝｻ	1	[SASB05][SASB10][SASB15]
6	534A7-50601		WIRE-HARNESS,SAS ﾜｲﾔﾊｰﾈｽ	1	[SASB05][SASB10][SASB15]
7	52N57-52031		WIRE-HARNESS,CONTROL ﾜｲﾔﾊｰﾈｽ	1	[SASB05][SASB10][SASB15]
8	26062-42881		RELAY,12V ﾘﾚｰ	1	[SASB05][SASB10][SASB15]

FIG.80 SPEED ALARM SYSTEM [SASR]

(F70326G0) スピードアラームシステム

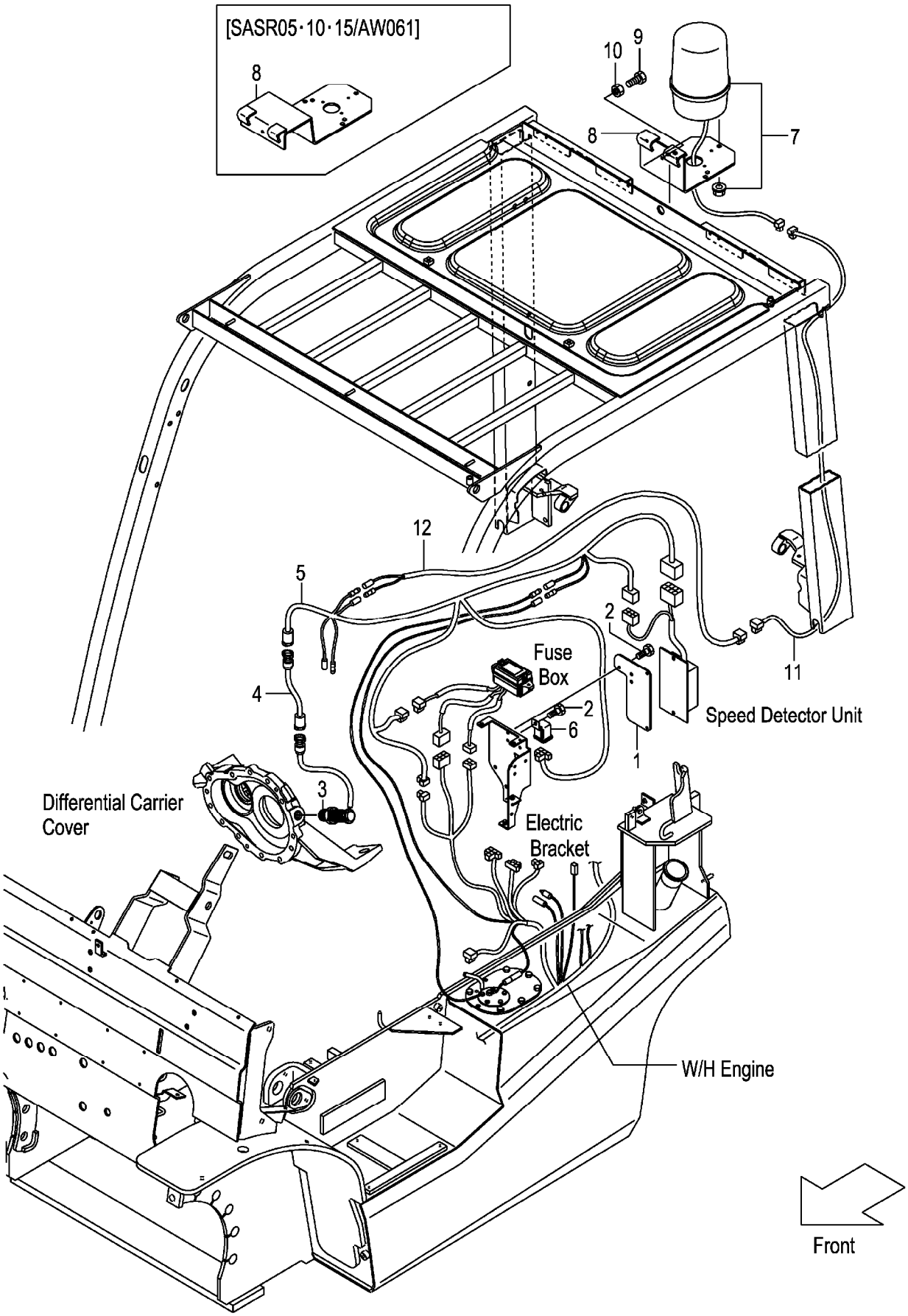

A:FG30C3 FG30T3 FG30W3
B:FD30C3 FD30T3 FD30W3

Item No	Part No.	Mark	Description		Req'd	Remarks : Serial No.
1	52N57-52001		BRACKET,CONTROLLER	ﾌﾞﾗｹｯﾄ	1	[SASR05][SASR10][SASR15]
2	214A2-42621		SCREW	ｽｸﾘｭ	4	[SASR05][SASR10][SASR15]
3	16402-54331		SENSOR	ｾﾝｻ	1	[SASR05][SASR10][SASR15]
4	534A7-50601		WIRE-HARNESS,SAS	ﾜｲﾔﾊｰﾈｽ	1	[SASR05][SASR10][SASR15]
5	52N57-52031		WIRE-HARNESS,CONTROL	ﾜｲﾔﾊｰﾈｽ	1	[SASR05][SASR10][SASR15]
6	26062-42881		RELAY,12V	ﾘﾚｰ	1	[SASR05][SASR10][SASR15]
7	514A1-41001		LIGHT,REVOLVING	ﾗｲﾄ	1	[SASR05][SASR10][SASR15]
8	529F1-42251		BRACKET,REVOLVING	ﾌﾞﾗｹｯﾄ	1	[SASR05][SASR10][SASR15]
-	539A8-92251		BRACKET,REVOLVING	ﾌﾞﾗｹｯﾄ	1	[SASR05/AW061][SASR10/AW061] [SASR15/AW061]
9	01100-08020		BOLT	ﾎﾞﾙﾄ	3	[SASR05][SASR10][SASR15]
10	01400-00008		NUT	ﾅｯﾄ	3	[SASR05][SASR10][SASR15]
11	52N58-92021		WIRE,LEAD	ﾜｲﾔ	1	[SASR05][SASR10][SASR15]
12	539A7-52101		WIRE,LEAD	ﾜｲﾔ	1	[SASR05][SASR10][SASR15]

FIG.81 SPEED ALARM SYSTEM [SASC]

(F70326H0) スピードアラームシステム

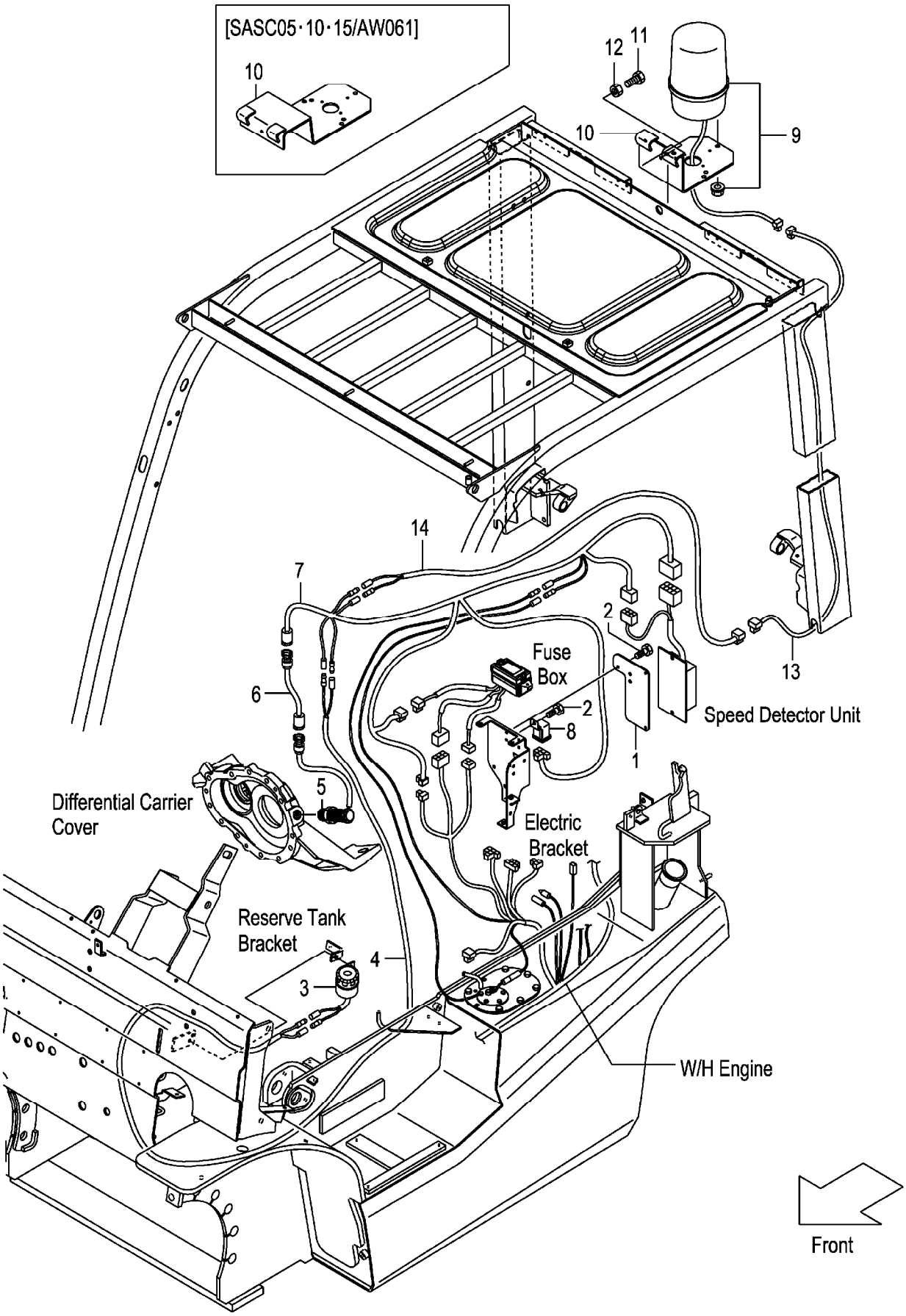

A:FG30C3 FG30T3 FG30W3
B:FD30C3 FD30T3 FD30W3

Item No	Part No.	Mark	Description		Req'd	Remarks : Serial No.
1	52N57-52001		BRACKET,CONTROLLER	ﾌﾞﾗｹｯﾄ	1	[SASC05][SASC10][SASC15]
2	214A2-42621		SCREW	ｽｸﾘｭ	4	[SASC05][SASC10][SASC15]
3	529F7-52241		ALARM,BUZZER	ｱﾗｰﾑ	1	[SASC05][SASC10][SASC15]
4	558A9-92001		WIRE-HARNESS,LICENCE	ﾜｲﾔﾊｰﾈｽ	1	[SASC05][SASC10][SASC15]
5	16402-54331		SENSOR	ｾﾝｻ	1	[SASC05][SASC10][SASC15]
6	534A7-50601		WIRE-HARNESS,SAS	ﾜｲﾔﾊｰﾈｽ	1	[SASC05][SASC10][SASC15]
7	52N57-52031		WIRE-HARNESS,CONTROL	ﾜｲﾔﾊｰﾈｽ	1	[SASC05][SASC10][SASC15]
8	26062-42881		RELAY,12V	ﾘﾚｰ	1	[SASC05][SASC10][SASC15]
9	514A1-41001		LIGHT,REVOLVING	ﾗｲﾄ	1	[SASC05][SASC10][SASC15]
10	529F1-42251		BRACKET,REVOLVING	ﾌﾞﾗｹｯﾄ	1	[SASC05][SASC10][SASC15]
-	539A8-92251		BRACKET,REVOLVING	ﾌﾞﾗｹｯﾄ	1	[SASC05/AW061][SASC10/AW061] [SASC15/AW061]
11	01100-08020		BOLT	ﾎﾞﾙﾄ	3	[SASC05][SASC10][SASC15]
12	01400-00008		NUT	ﾅｯﾄ	3	[SASC05][SASC10][SASC15]
13	52N58-92021		WIRE,LEAD	ﾜｲﾔ	1	[SASC05][SASC10][SASC15]
14	539A7-52101		WIRE,LEAD	ﾜｲﾔ	1	[SASC05][SASC10][SASC15]

FIG.82 OK MONITOR [OKM]

(F70326J0) OKモニタ

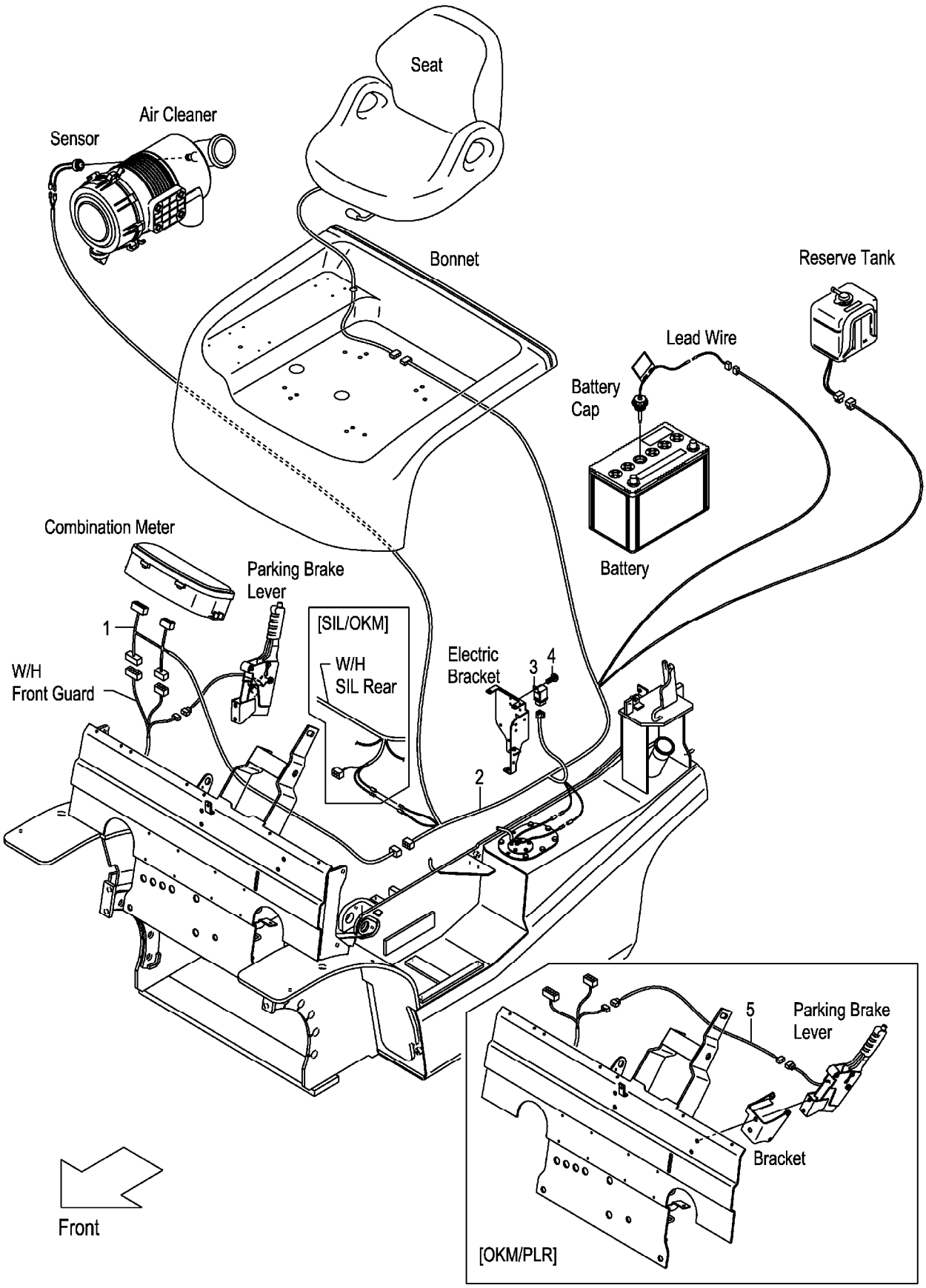

A:FG30C3 FG30T3 FG30W3
B:FD30C3 FD30T3 FD30W3

Item No	Part No.	Mark	Description		Req'd	Remarks : Serial No.
1	52N56-22021		WIRE,LEAD,OKM	ﾜｲﾔ	1	[OKM]
2	52N56-22011		WIRE-HARNESS,OKM	ﾜｲﾔﾊｰﾈｽ	1	[OKM]
3	26062-42881		RELAY,12V	ﾘﾚｰ	1	[OKM]
4	214A2-42611		SCREW	ｽｸﾘｭ	1	[OKM]
5	52N56-22401		WIRE-HARNESS,SWITCH	ﾜｲﾔﾊｰﾈｽ	1	[OKM/PLR]

INTERLOCK
FIG.83 (GASOLINE:CLUTCH & OIL CLUTCH)[SIL][EXE][EXN]

(F70326K0) インターロック

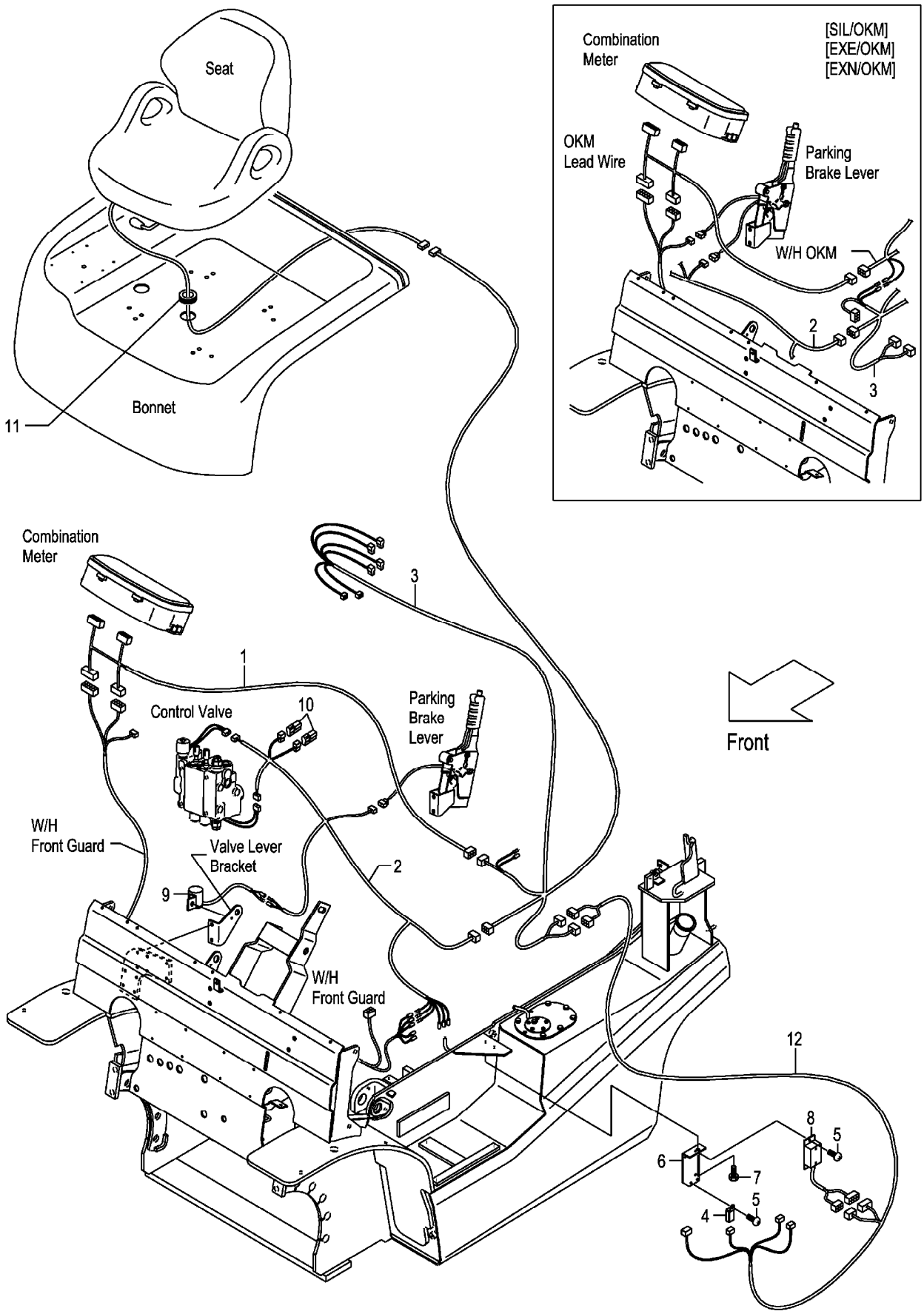

A:FG30C3
B:FG30W3

Item No	Part No.	Mark	Description		Req'd	Remarks : Serial No.
1	52N56-22021		WIRE,LEAD,OKM	ﾜｲﾔ	1	[SIL](WITHOUT SIL/OKM)
-	52N56-22021		WIRE,LEAD,OKM	ﾜｲﾔ	1	A
						[EXE][EXN]
						(WITHOUT EXE/OKM,EXN/OKM)
2	52N57-E2001		WIRE-HARNESS,SIL,F	ﾜｲﾔﾊｰﾈｽ	1	[SIL]
-	52N57-E2001		WIRE-HARNESS,SIL,F	ﾜｲﾔﾊｰﾈｽ	1	A
						[EXE][EXN]
3	52N57-E2011		WIRE-HARNESS,SIL,R	ﾜｲﾔﾊｰﾈｽ	1	[SIL]
-	52N57-E2011		WIRE-HARNESS,SIL,R	ﾜｲﾔﾊｰﾈｽ	1	A
						[EXE][EXN]
4	209K2-42351		RELAY,1A	ﾘﾚｰ	1	[SIL]
-	209K2-42351		RELAY,1A	ﾘﾚｰ	1	A
						[EXE][EXN]
5	214A2-42611		SCREW	ｽｸﾘｭ	3	[SIL]
-	214A2-42611		SCREW	ｽｸﾘｭ	3	A
						[EXE][EXN]
6	52N57-E2201		BRACKET,RELAY	ﾌﾞﾗｹｯﾄ	1	[SIL]
-	52N57-E2201		BRACKET,RELAY	ﾌﾞﾗｹｯﾄ	1	A
						[EXE][EXN]
7	01185-08012		BOLT	ﾎﾞﾙﾄ	1	[SIL]
-	01185-08012		BOLT	ﾎﾞﾙﾄ	1	A
						[EXE][EXN]
8	247C2-43301		TIMER	ﾀｲﾏ	1	[SIL]
-	247C2-43301		TIMER	ﾀｲﾏ	1	A
						[EXE][EXN]
9	247C2-43601		BUZZER	ﾌﾞｻﾞｰ	1	[SIL]
-	247C2-43601		BUZZER	ﾌﾞｻﾞｰ	1	A
						[EXE][EXN]
10	230C2-42201		DIODE,3A	ﾀﾞｲｵｰﾄﾞ	2	[SIL]
-	230C2-42201		DIODE,3A	ﾀﾞｲｵｰﾄﾞ	2	A
						[EXE][EXN]
11	27682-62131		GROMMET	ｸﾞﾛﾒｯﾄ	1	[SIL]
-	27682-62131		GROMMET	ｸﾞﾛﾒｯﾄ	1	A
						[EXE][EXN]
12	246B2-43221		WIRE,LEAD,SIL	ﾜｲﾔ	1	[SIL]
-	246B2-43221		WIRE,LEAD,SIL	ﾜｲﾔ	1	A
						[EXE][EXN]

FIG.84 INTERLOCK (GASOLINE:TOR-CON)[SIL][EXE][EXN]

(F70326L0) インターロック

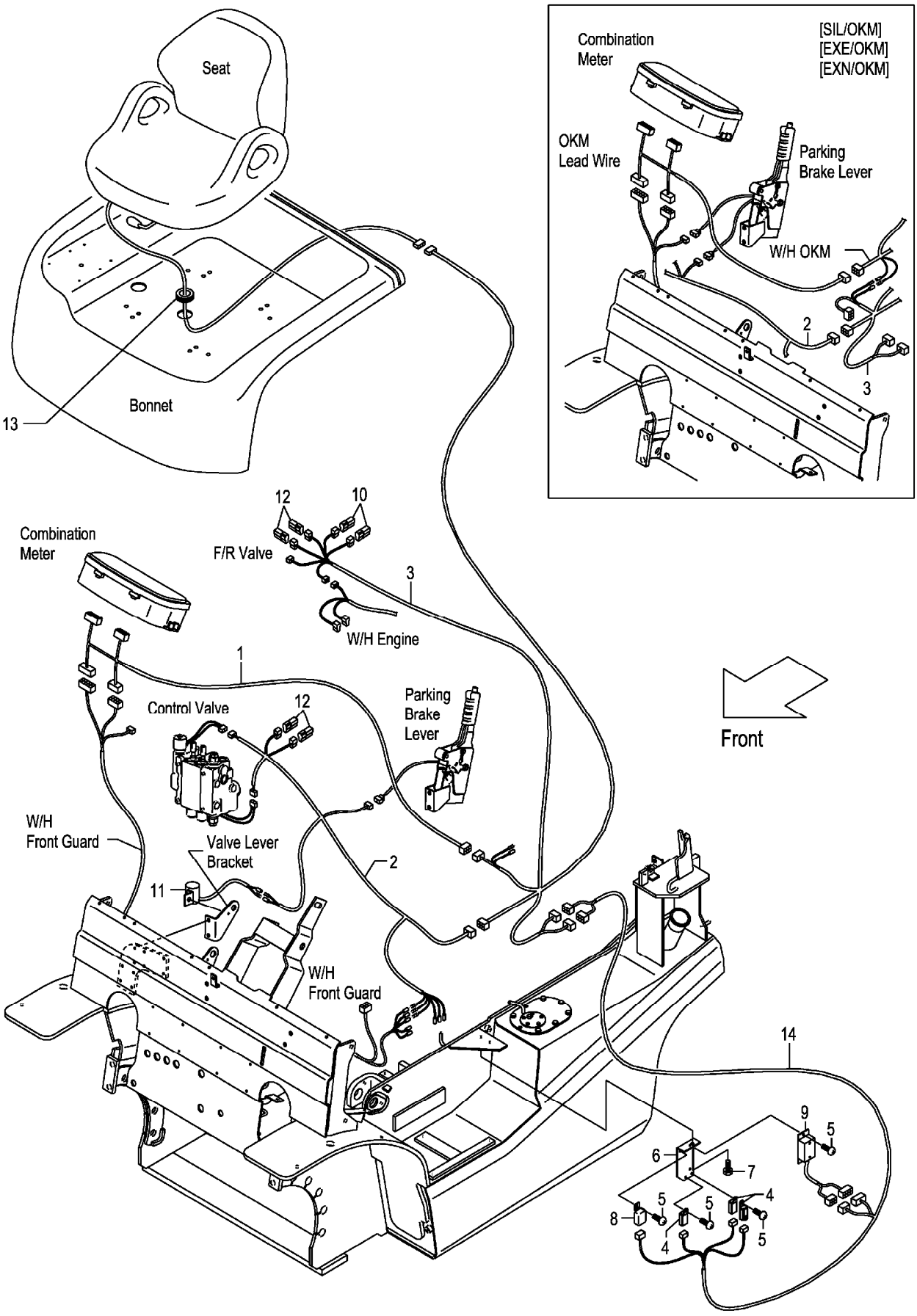

A:FG30T3

Item No	Part No.	Mark	Description		Req'd	Remarks : Serial No.
1	52N56-22021		WIRE,LEAD,OKM	ﾜｲﾔ	1	[SIL][EXE][EXN]
						(WITHOUT SIL&EXE&EXN/OKM)
2	52N57-E2001		WIRE-HARNESS,SIL,F	ﾜｲﾔﾊｰﾈｽ	1	[SIL][EXE][EXN]
3	52N57-E2011		WIRE-HARNESS,SIL,R	ﾜｲﾔﾊｰﾈｽ	1	[SIL][EXE][EXN]
4	209K2-42351		RELAY,1A	ﾘﾚｰ	3	[SIL][EXE][EXN]
5	214A2-42611		SCREW	ｽｸﾘｭ	5	[SIL][EXE][EXN]
6	52N57-E2201		BRACKET,RELAY	ﾌﾞﾗｹｯﾄ	1	[SIL][EXE][EXN]
7	01185-08012		BOLT	ﾎﾞﾙﾄ	1	[SIL][EXE][EXN]
8	247C2-43501		RELAY,1C	ﾘﾚｰ	1	[SIL][EXE][EXN]
9	247C2-43301		TIMER	ﾀｲﾏ	1	[SIL][EXE][EXN]
10	21152-42091		DIODE,1A	ﾀﾞｲｵｰﾄﾞ	2	[SIL][EXE][EXN]
11	247C2-43601		BUZZER	ﾌﾞｻﾞｰ	1	[SIL][EXE][EXN]
12	230C2-42201		DIODE,3A	ﾀﾞｲｵｰﾄﾞ	4	[SIL][EXE][EXN]
13	27682-62131		GROMMET	ｸﾞﾛﾒｯﾄ	1	[SIL][EXE][EXN]
14	246B2-43221		WIRE,LEAD,SIL	ﾜｲﾔ	1	[SIL][EXE][EXN]

FIG.85 INTERLOCK (DIESEL:CLUTCH & OIL CLUTCH)[SIL][EXE][EXN]

(F70326M0) インターロック

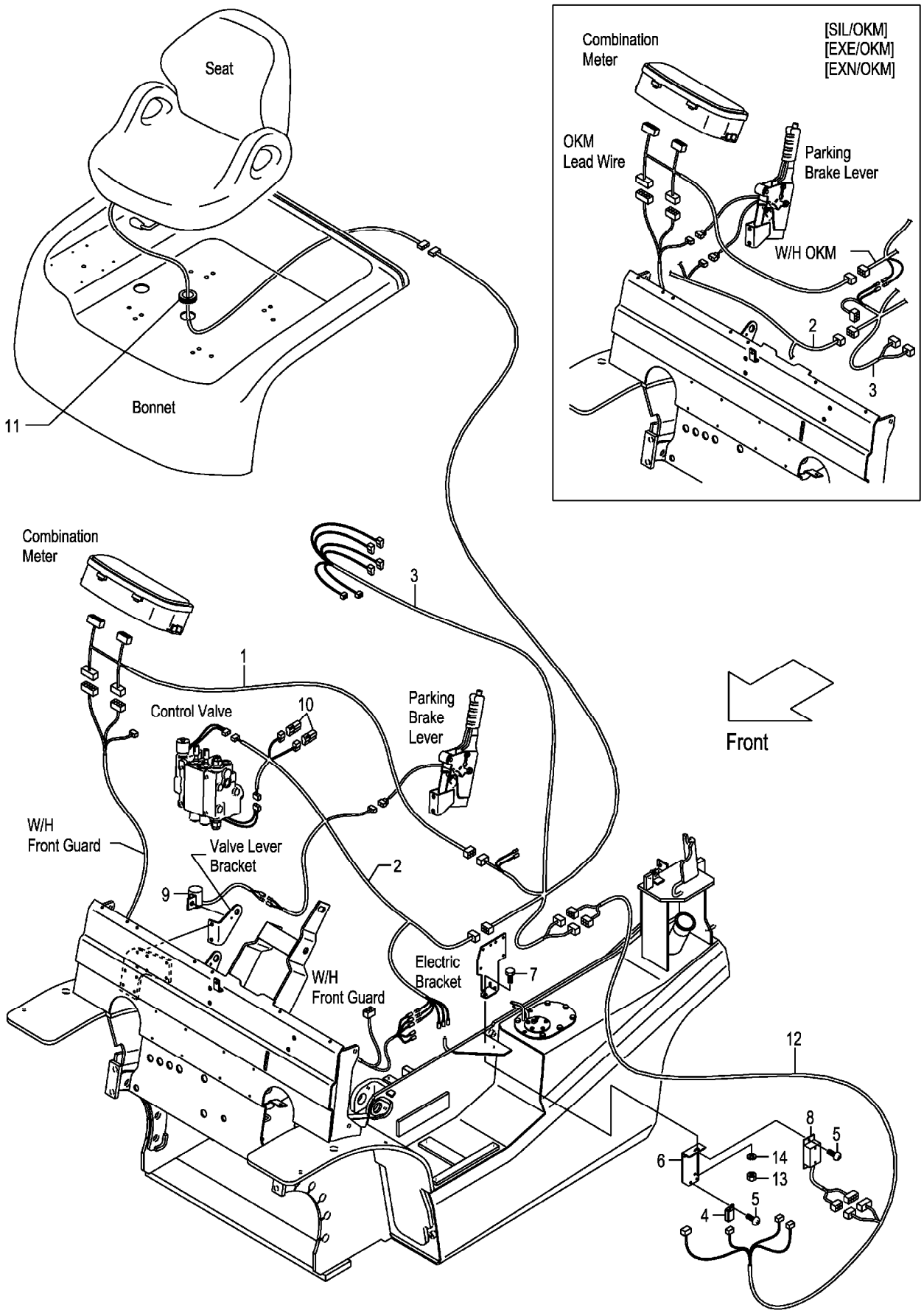

A:FD30C3
B:FD30W3

Item No	Part No.	Mark	Description		Req'd	Remarks : Serial No.
1	52N56-22021		WIRE,LEAD,OKM	ﾜｲﾔ	1	[SIL](WITHOUT SIL/OKM)
-	52N56-22021		WIRE,LEAD,OKM	ﾜｲﾔ	1	A
						[EXE][EXN]
						(WITHOUT EXE/OKM,EXN/OKM)
2	52N57-E2001		WIRE-HARNESS,SIL,F	ﾜｲﾔﾊｰﾈｽ	1	[SIL]
-	52N57-E2001		WIRE-HARNESS,SIL,F	ﾜｲﾔﾊｰﾈｽ	1	A
						[EXE][EXN]
3	52N57-E2011		WIRE-HARNESS,SIL,R	ﾜｲﾔﾊｰﾈｽ	1	[SIL]
-	52N57-E2011		WIRE-HARNESS,SIL,R	ﾜｲﾔﾊｰﾈｽ	1	A
						[EXE][EXN]
4	209K2-42351		RELAY,1A	ﾘﾚｰ	1	[SIL]
-	209K2-42351		RELAY,1A	ﾘﾚｰ	1	A
						[EXE][EXN]
5	214A2-42611		SCREW	ｽｸﾘｭ	3	[SIL]
-	214A2-42611		SCREW	ｽｸﾘｭ	3	A
						[EXE][EXN]
6	52N57-E2201		BRACKET,RELAY	ﾌﾞﾗｹｯﾄ	1	[SIL]
-	52N57-E2201		BRACKET,RELAY	ﾌﾞﾗｹｯﾄ	1	A
						[EXE][EXN]
7	01185-08025		BOLT	ﾎﾞﾙﾄ	1	[SIL]
-	01185-08025		BOLT	ﾎﾞﾙﾄ	1	A
						[EXE][EXN]
8	247C2-43301		TIMER	ﾀｲﾏ	1	[SIL]
-	247C2-43301		TIMER	ﾀｲﾏ	1	A
						[EXE][EXN]
9	247C2-43601		BUZZER	ﾌﾞｻﾞｰ	1	[SIL]
-	247C2-43601		BUZZER	ﾌﾞｻﾞｰ	1	A
						[EXE][EXN]
10	230C2-42201		DIODE,3A	ﾀﾞｲｵｰﾄﾞ	2	[SIL]
-	230C2-42201		DIODE,3A	ﾀﾞｲｵｰﾄﾞ	2	A
						[EXE][EXN]
11	27682-62131		GROMMET	ｸﾞﾛﾒｯﾄ	1	[SIL]
-	27682-62131		GROMMET	ｸﾞﾛﾒｯﾄ	1	A
						[EXE][EXN]
12	246B2-43221		WIRE,LEAD,SIL	ﾜｲﾔ	1	[SIL]
-	246B2-43221		WIRE,LEAD,SIL	ﾜｲﾔ	1	A
						[EXE][EXN]
13	01400-00008		NUT	ﾅｯﾄ	1	[SIL]
-	01400-00008		NUT	ﾅｯﾄ	1	A
						[EXE][EXN]
14	02010-00008		WASHER	ﾜｯｼｬ	1	[SIL]
-	02010-00008		WASHER	ﾜｯｼｬ	1	A
						[EXE][EXN]

FIG.86 INTERLOCK (DIESEL:TOR-CON)[SIL][EXE][EXN]

(F70326N0) インターロック

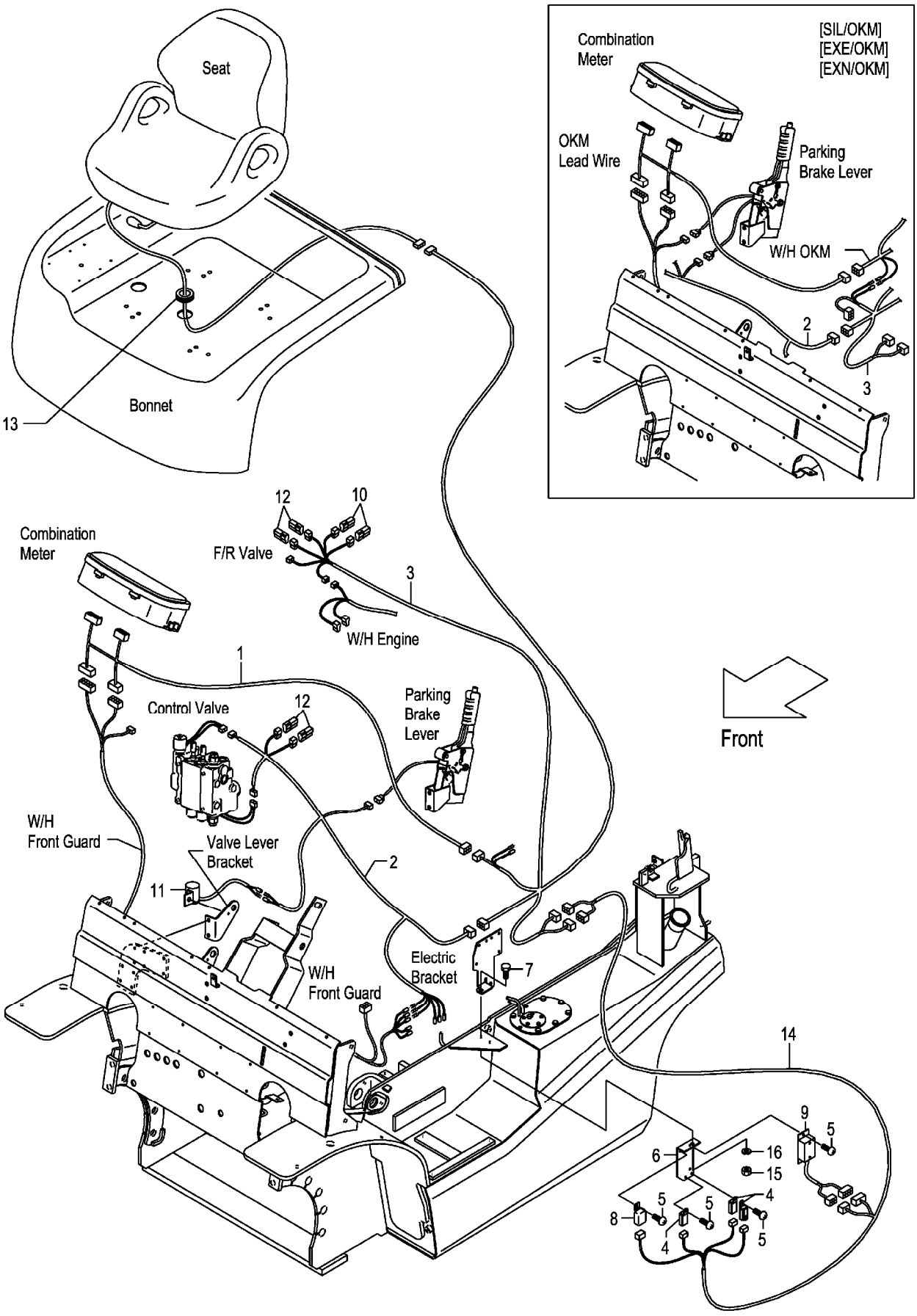

FIG.86

(F70326N0)

A:FD30T3

Item No	Part No.	Mark	Description		Req'd	Remarks : Serial No.
1	52N56-22021		WIRE,LEAD,OKM	ﾜｲﾔ	1	[SIL][EXE][EXN]
						(WITHOUT SIL&EXE&EXN/OKM)
2	52N57-E2001		WIRE-HARNESS,SIL,F	ﾜｲﾔﾊｰﾈｽ	1	[SIL][EXE][EXN]
3	52N57-E2011		WIRE-HARNESS,SIL,R	ﾜｲﾔﾊｰﾈｽ	1	[SIL][EXE][EXN]
4	209K2-42351		RELAY,1A	ﾘﾚｰ	3	[SIL][EXE][EXN]
5	214A2-42611		SCREW	ｽｸﾘｭ	5	[SIL][EXE][EXN]
6	52N57-E2201		BRACKET,RELAY	ﾌﾞﾗｹｯﾄ	1	[SIL][EXE][EXN]
7	01185-08025		BOLT	ﾎﾞﾙﾄ	1	[SIL][EXE][EXN]
8	247C2-43501		RELAY,1C	ﾘﾚｰ	1	[SIL][EXE][EXN]
9	247C2-43301		TIMER	ﾀｲﾏ	1	[SIL][EXE][EXN]
10	21152-42091		DIODE,1A	ﾀﾞｲｵｰﾄﾞ	2	[SIL][EXE][EXN]
11	247C2-43601		BUZZER	ﾌﾞｻﾞｰ	1	[SIL][EXE][EXN]
12	230C2-42201		DIODE,3A	ﾀﾞｲｵｰﾄﾞ	4	[SIL][EXE][EXN]
13	27682-62131		GROMMET	ｸﾞﾛﾒｯﾄ	1	[SIL][EXE][EXN]
14	246B2-43221		WIRE,LEAD,SIL	ﾜｲﾔ	1	[SIL][EXE][EXN]
15	01400-00008		NUT	ﾅｯﾄ	1	[SIL][EXE][EXN]
16	02010-00008		WASHER	ﾜｯｼｬ	1	[SIL][EXE][EXN]

FIG.87 DRIVE AXLE

(F7033010) ﾄﾞﾗｲﾌﾞｱｸｽﾙ

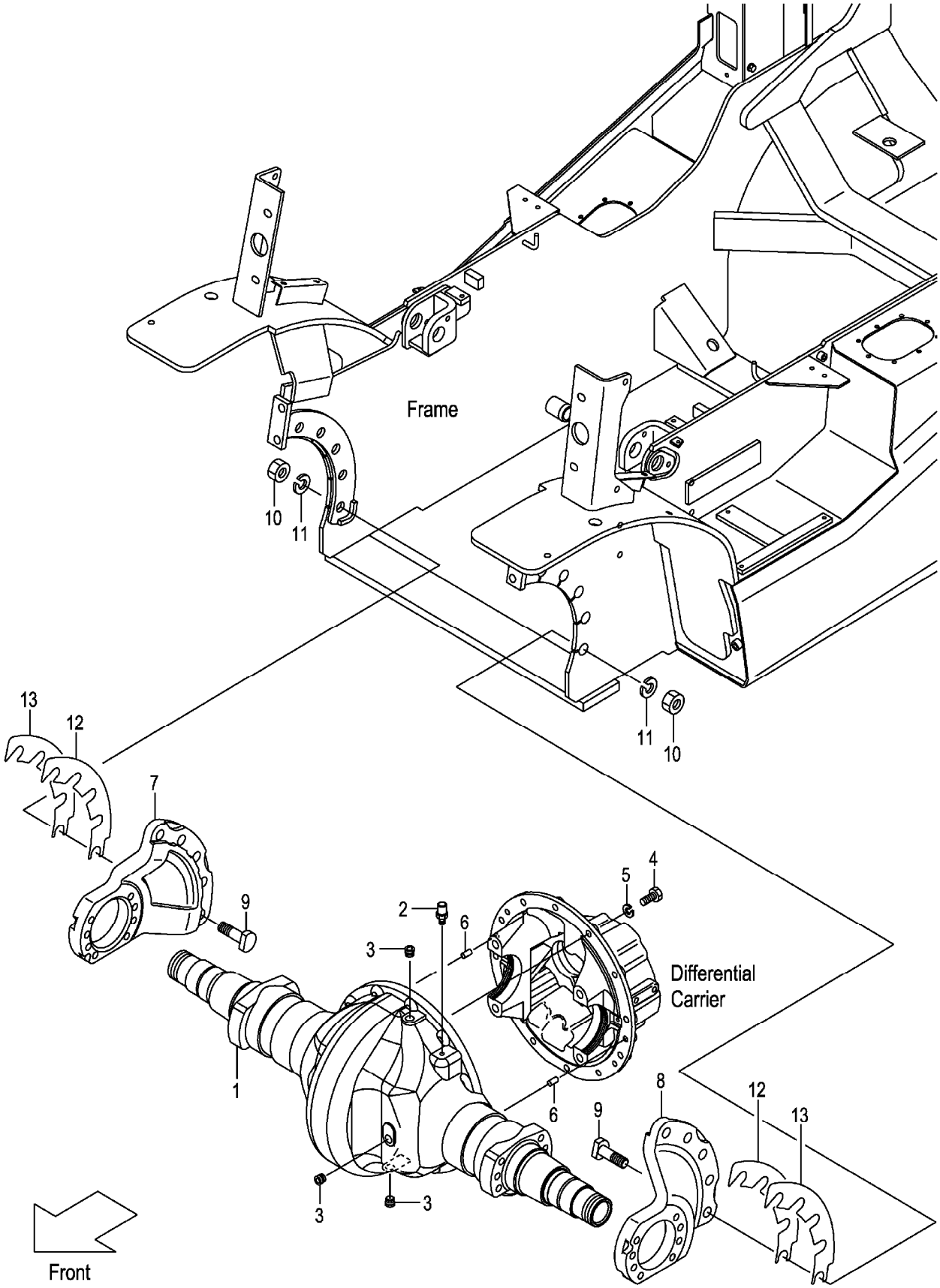

A:FG30C3 FG30T3 FG30W3
B:FD30C3 FD30T3 FD30W3

Item No	Part No.	Mark	Description		Req'd	Remarks : Serial No.
1	22N93-00302		HOUSING,AXLE	ﾊｳｼﾞﾝｸﾞ	1	
2	15573-42151		BREATHER,AIR	ﾌﾞﾘｰｻﾞ	1	
3	22193-03001		PLUG	ﾌﾟﾗｸﾞ	3	
4	01106-12040		BOLT	ﾎﾞﾙﾄ	12	
5	02011-00012		WASHER	ﾜｯｼｬ	12	
6	02212-10020		PIN,PARALLEL	ﾋﾟﾝ	2	
7	22N93-00602		SUPPORT,AXLE,RH	ｻﾎﾟｰﾄ	1	
8	22N93-00612		SUPPORT,AXLE,LH	ｻﾎﾟｰﾄ	1	
9	22N53-02151		BOLT	ﾎﾞﾙﾄ	10	
10	01400-10020		NUT	ﾅｯﾄ	10	
11	02010-00020		WASHER	ﾜｯｼｬ	10	
12	22N53-02601		SHIM,SUPPORT,T-0.5	ｼﾑ	2	A:110- B:102-
13	22N53-02611		SHIM,SUPPORT,T-1.0	ｼﾑ	2	A:110- B:102-

FIG.88 DRUM HUB

(F7033020) ﾄﾞﾗﾑﾊﾌﾞ

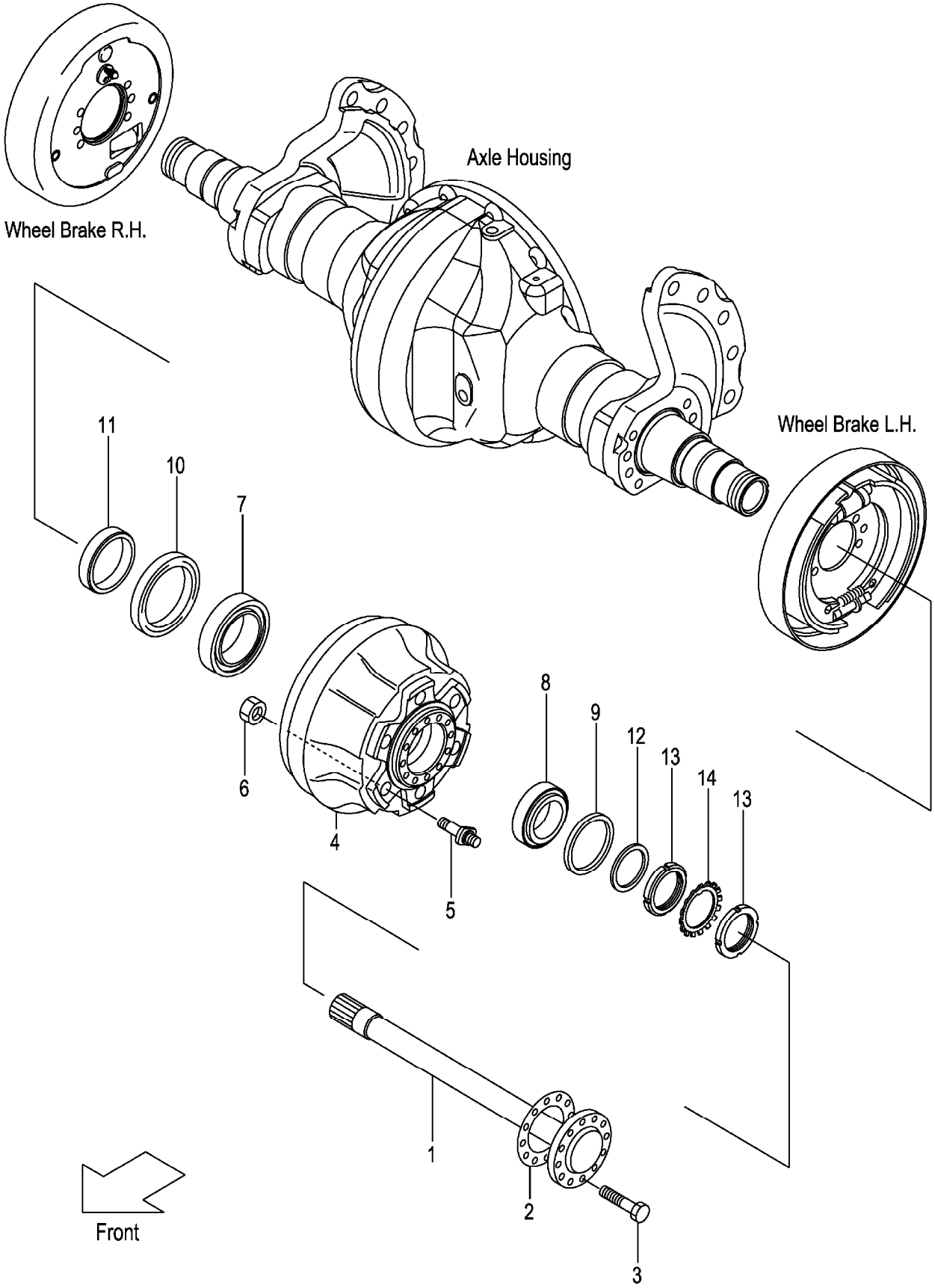

A:FG30C3 FG30T3 FG30W3
B:FD30C3 FD30T3 FD30W3

Item No	Part No.	Mark	Description		Req'd	Remarks : Serial No.
1	214J3-02011		SHAFT,DRIVE	ｼｬﾌﾄ	2	
2	24453-02102		PACKING	ﾊﾟｯｷﾝｸﾞ	2	
3	24453-02061		BOLT,REAMER	ﾎﾞﾙﾄ	24	
4	22N93-02001		HUB & DRUM	ﾊﾌﾞ&ﾄﾞﾗﾑ	2	
5	25303-02102		BOLT,HUB	ﾎﾞﾙﾄ	12	
6	01400-10020		NUT	ﾅｯﾄ	12	
7	03071-30214		BEARING,TAPER-ROLLER	ﾍﾞｱﾘﾝｸﾞ	2	
8	23453-02071		BEARING,TAPER-ROLLER	ﾍﾞｱﾘﾝｸﾞ	2	INC.9
9	23453-02131		SEAL,OIL	ｼｰﾙ	2	
10	03211-09501		SEAL,OIL	ｼｰﾙ	2	
11	22N53-02071		RETAINER,OIL-SEAL	ﾘﾃｰﾅ	2	
12	23453-02091		WASHER	ﾜｯｼｬ	2	
13	03192-00012		NUT,BEARING	ﾅｯﾄ	4	
14	03192-10012		WASHER,BEARING	ﾜｯｼｬ	2	

FIG.89 PROPELLER SHAFT

(F7033310) ﾌﾟﾛﾍﾟﾗｼｬﾌﾄ

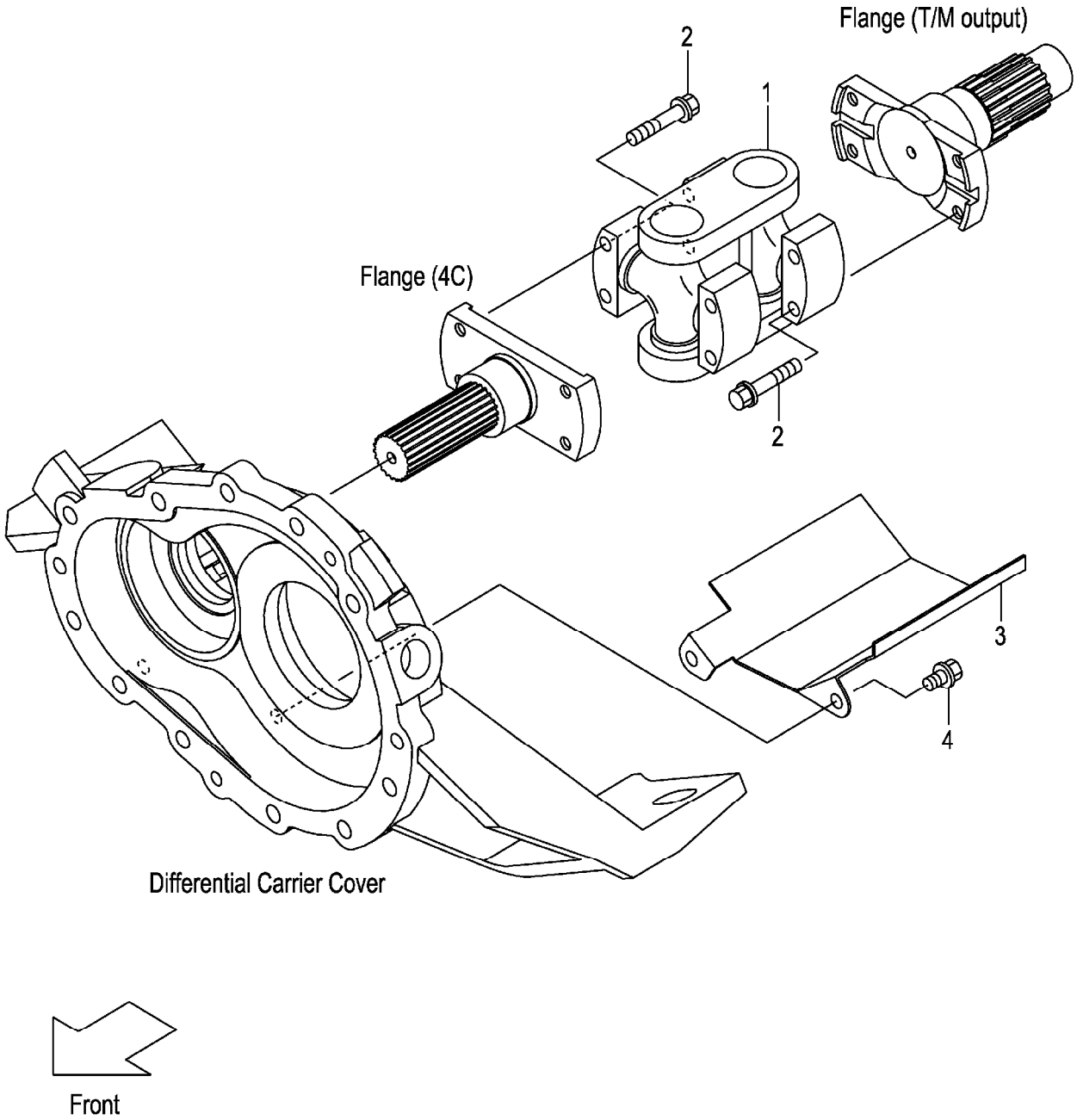

A:FG30C3 FG30T3 FG30W3
B:FD30C3 FD30T3 FD30W3

Item No	Part No.	Mark	Description	Req'd	Remarks : Serial No.
1	12N53-32001		SHAFT,PROPELLER シャフト	1	
2	12N53-82641		BOLT,FLANGE ボルト	8	
3	12N53-32011		COVER,PROPEL-SHAFT カバー	1	
4	12N53-82621		BOLT,FLANGE ボルト	2	

FIG.90 REDUCTION & DIFFERENTIAL

(F7033510) ﾘﾀﾞｸｼｮﾝ&ﾃﾞｨﾌｧﾚﾝｼｬﾙ

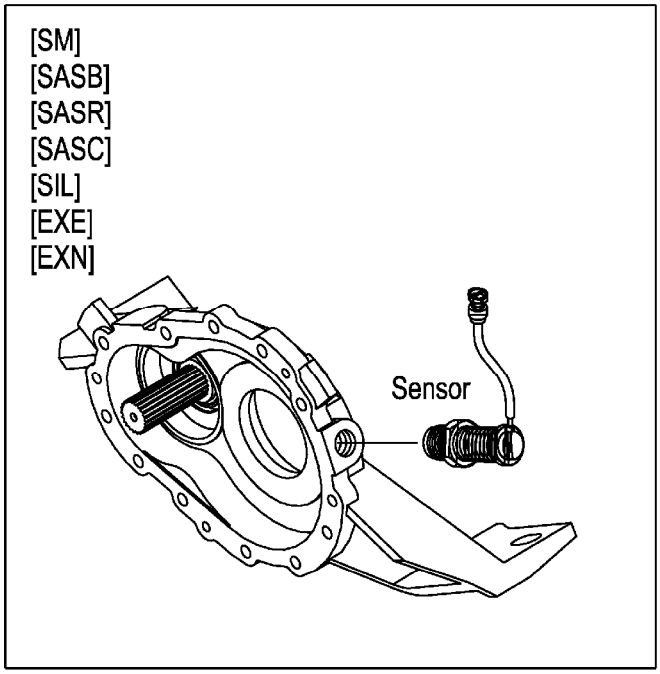

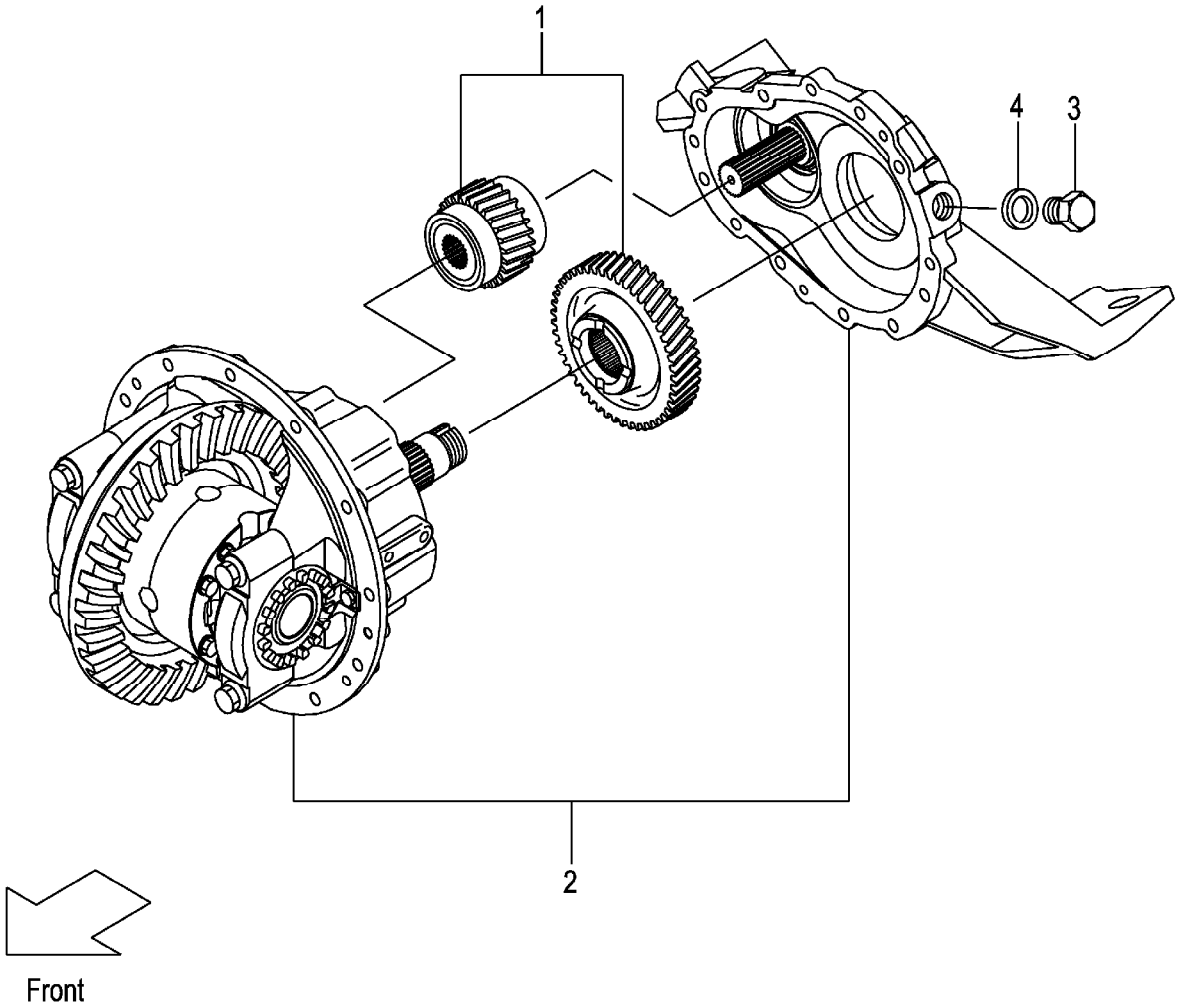

A:FG30C3 FG30T3 FG30W3
B:FD30C3 FD30T3 FD30W3

(F7033510)

Item No	Part No.	Mark	Description		Req'd	Remarks : Serial No.
A1	12N53-50201		DIFFERENTIAL-ASSY	ﾃﾞﾌｧﾚﾝｼｬﾙｱｯｾﾝ	1	INC.1,2
-	12N53-50231		DIFFERENTIAL-ASSY	ﾃﾞﾌｧﾚﾝｼｬﾙｱｯｾﾝ	1	[DNS] INC.1,2
1	NO PART NO.		REDUCTION	ﾘﾀﾞｸｼｮﾝ	1	SEE FIG.91
2	NO PART NO.		DIFFERENTIAL	ﾃﾞﾌｧﾚﾝｼｬﾙ	1	SEE FIG.92
-	NO PART NO.		DIFFERENTIAL	ﾃﾞﾌｧﾚﾝｼｬﾙ	1	[DNS]SEE FIG.92
3	124T3-42651		BOLT	ﾎﾞﾙﾄ	1	(WITHOUT SM,SASB,SASR,SASC, SIL,EXE,EXN)
4	124T3-42661		PACKING	ﾊﾟｯｷﾝｸﾞ	1	(WITHOUT SM,SASB,SASR,SASC, SIL,EXE,EXN)

FIG.91 REDUCTION

(F7033520) ﾘﾀﾞｸｼｮﾝ

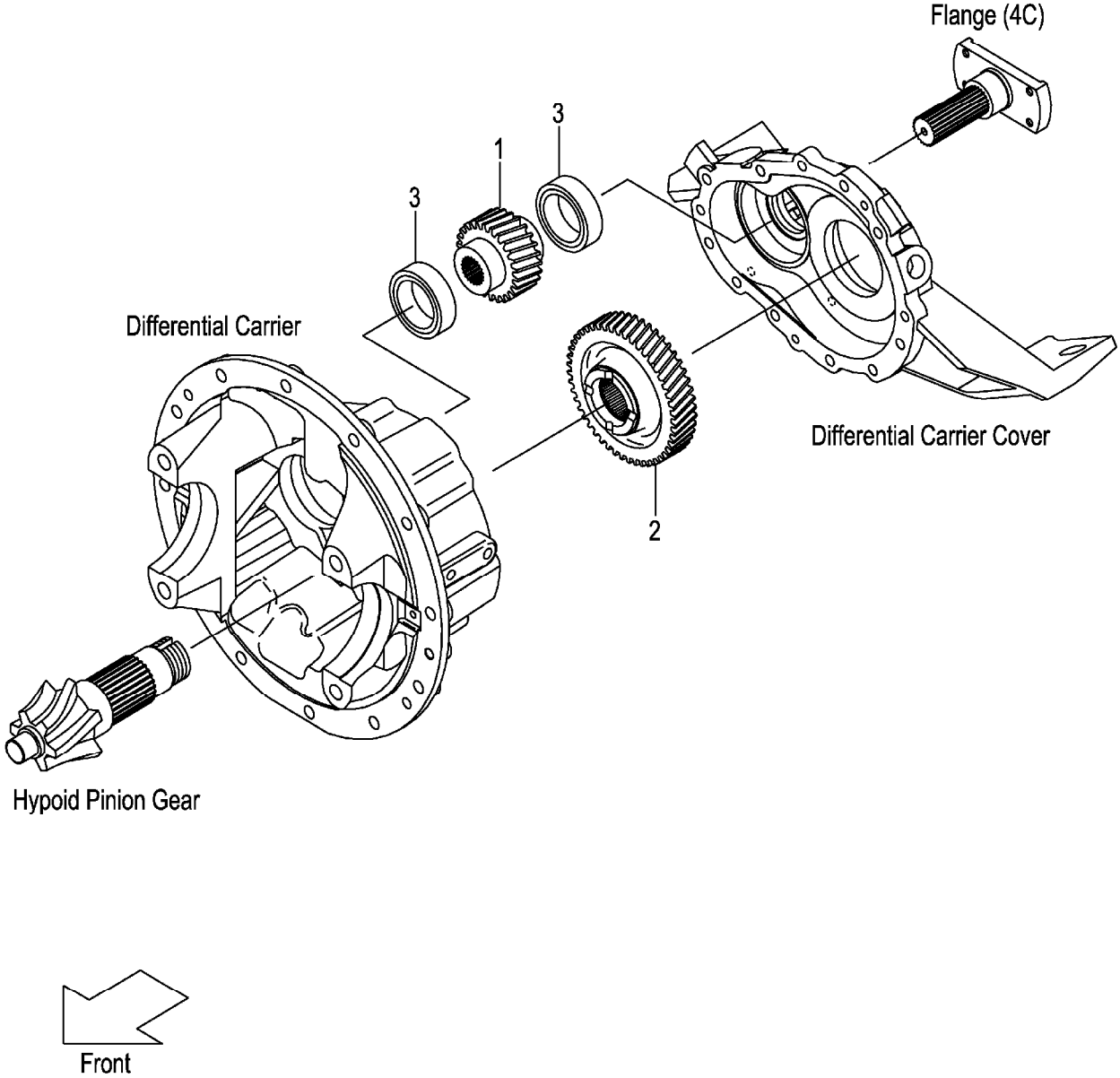

A:FG30C3 FG30T3 FG30W3
B:FD30C3 FD30T3 FD30W3

Item No	Part No.	Mark	Description	Req'd	Remarks : Serial No.
1	12N53-22001		GEAR,REDUCTION ｷﾞﾔｰ	1	
2	12N53-22011		GEAR,REDUCTION ｷﾞﾔｰ	1	
3	03000-06210		BEARING,BALL ﾍﾞｱﾘﾝｸﾞ	2	

FIG.92 DIFFERENTIAL

(F7033530) ﾃﾞｨﾌｧﾚﾝｼｬﾙ

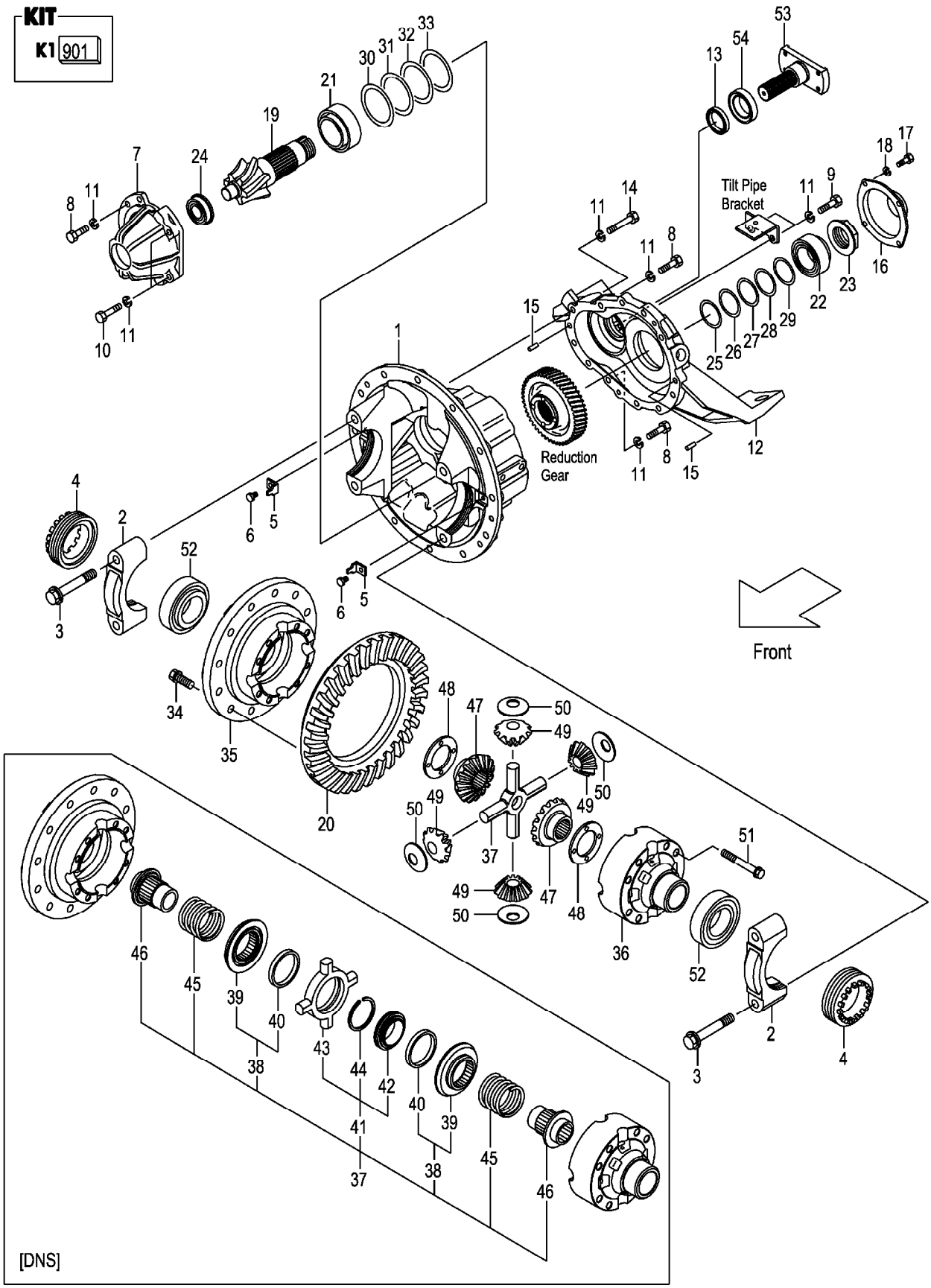

A:FG30C3 FG30T3 FG30W3
B:FD30C3 FD30T3 FD30W3

Item No	Part No.	Mark	Description		Req'd	Remarks : Serial No.
901	12N53-59821	K1	KIT,OVERHAUL,DIFF	ｵｰﾊﾞﾎｰﾙｷｯﾄ	1	INC.5,13,23,25-33,48,50
A1	12N53-50301		CARRIER & CAP-ASSY	ｷｬﾘﾔ&ｷｬｯﾌﾟｱｯｾﾝ	1	INC.1-3
1	NO PART NO.	#	CARRIER,DIFFERENTIAL	ｷｬﾘﾔ	1	
2	NO PART NO.	#	CAP,BEARING	ｷｬｯﾌﾟ	2	
3	12N53-52131		BOLT,REAMER	ﾎﾞﾙﾄ	4	
4	12N53-52081		NUT,ADJUST	ﾅｯﾄ	2	
5	12N53-52141	*	PLATE,LOCK	ﾌﾟﾚｰﾄ	2	
6	12N53-82621		BOLT,FLANGE	ﾎﾞﾙﾄ	2	
7	12N53-52061		SUPPORT,BEARING	ｻﾎﾟｰﾄ	1	
8	01106-10030		BOLT	ﾎﾞﾙﾄ	6	
9	01106-10035		BOLT	ﾎﾞﾙﾄ	2	
10	01106-10045		BOLT	ﾎﾞﾙﾄ	2	
11	02011-00010		WASHER	ﾜｯｼｬ	17	
12	12N53-52031		COVER,DIFF-CARRIER	ｶﾊﾞｰ	1	
13	12N53-52251	*	SEAL,OIL	ｼｰﾙ	1	
14	01106-10060		BOLT	ﾎﾞﾙﾄ	7	
15	02212-10020		PIN,PARALLEL	ﾋﾟﾝ	2	
16	12N53-52111		COVER,PINION	ｶﾊﾞｰ	1	
17	01103-08016		BOLT	ﾎﾞﾙﾄ	4	
18	02011-00008		WASHER	ﾜｯｼｬ	4	
A2	12N53-59801		GEAR-ASSY,HYPOID	ﾊｲﾎﾟｲﾄﾞｷﾞﾔｰｱｯｾﾝ	1	INC.19,20
19	NO PART NO.	#	GEAR,PINION,LH	ｷﾞﾔｰ	1	
20	NO PART NO.	#	GEAR,RING,RH	ｷﾞﾔｰ	1	
21	14603-52131		BEARING,TAPER-ROLLER	ﾍﾞｱﾘﾝｸﾞ	1	
22	12N53-52231		BEARING,TAPER-ROLLER	ﾍﾞｱﾘﾝｸﾞ	1	
23	12N53-52101	*	NUT,PINION	ﾅｯﾄ	1	
24	12N53-52341		BEARING,ROLLER	ﾍﾞｱﾘﾝｸﾞ	1	
25	12N53-52171	*	SHIM,T-0.1	ｼﾑ	1	
26	12N53-52271	*	SHIM,T-0.15	ｼﾑ	1	
27	12N53-52181	*	SHIM,T-0.2	ｼﾑ	2	
28	12N53-52191	*	SHIM,T-0.5	ｼﾑ	1	
29	12N53-52351	*	SHIM,T-0.125	ｼﾑ	1	
30	12N53-52201	*	SHIM,T-0.1	ｼﾑ	1	
31	12N53-52291	*	SHIM,T-0.15	ｼﾑ	1	
32	12N53-52211	*	SHIM,T-0.2	ｼﾑ	2	
33	12N53-52221	*	SHIM,T-0.5	ｼﾑ	1	
34	12N53-52151		BOLT,FLANGE	ﾎﾞﾙﾄ	12	
A3	12N53-59811		CASE-ASSY,CROSS	ｸﾛｽｹｰｽｱｯｾﾝ	1	INC.35,36
35	NO PART NO.	#	CASE,CROSS,RH	ｹｰｽ	1	
36	NO PART NO.	#	CASE,CROSS,LH	ｹｰｽ	1	
37	124G3-52011		SPIDER	ｽﾊﾟｲﾀﾞ	1	
-	12N53-52381		NOSPIN	ﾉｰｽﾋﾟﾝ	1	[DNS] INC.38-46
38	12N53-52431		CLUTCH,DRIVEN	ｸﾗｯﾁ	2	[DNS] INC.39,40
39	12N53-52441		CLUTCH,DRIVEN	ｸﾗｯﾁ	2	[DNS]
40	12N53-52451		RING,HOLDOUT	ﾘﾝｸﾞ	2	[DNS]
41	12N53-52461		SPIDER	ｽﾊﾟｲﾀﾞ	1	[DNS] INC.42-44
42	12N53-52471		CAM,CENTER	ｶﾑ	1	[DNS]
43	12N53-52481		SPIDER	ｽﾊﾟｲﾀﾞ	1	[DNS]
44	12N53-52491		RING,SNAP	ｽﾅｯﾌﾟﾘﾝｸﾞ	1	[DNS]
45	12N53-52501		SPRING	ｽﾌﾟﾘﾝｸﾞ	2	[DNS]

FIG.92 DIFFERENTIAL

(F7033530) ﾃﾞｨﾌｧﾚﾝｼｬﾙ

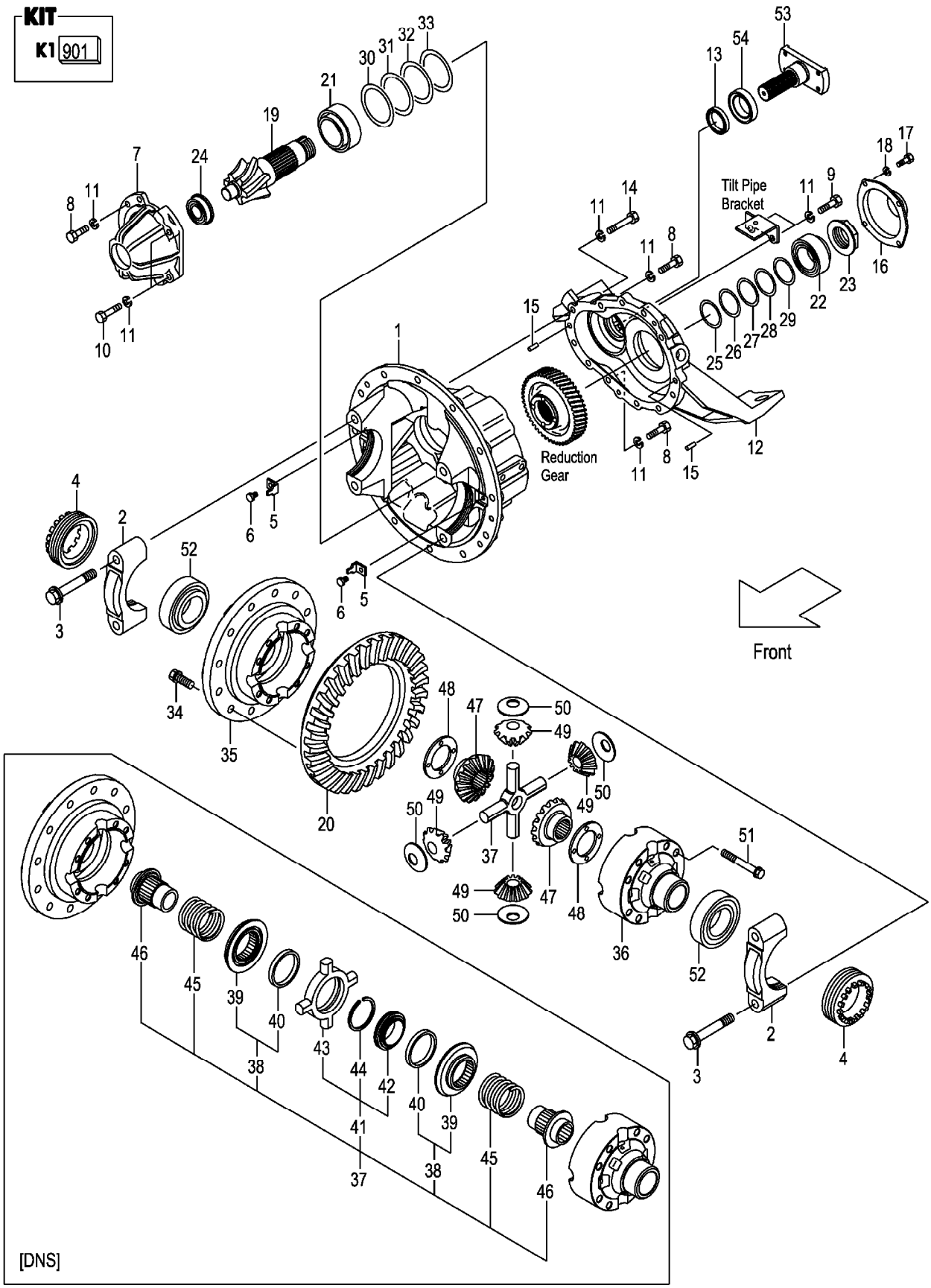

A:FG30C3 FG30T3 FG30W3
B:FD30C3 FD30T3 FD30W3

Item No	Part No.	Mark	Description		Req'd	Remarks : Serial No.
46	12N53-52511		GEAR,SIDE	ｷﾞﾔｰ	2	[DNS]
47	134A3-52041		GEAR,SIDE	ｷﾞﾔｰ	2	(WITHOUT DNS)
48	16113-52141	*	WASHER,THRUST	ﾜｯｼｬ	2	(WITHOUT DNS)
49	134A3-52051		GEAR,PINION	ｷﾞﾔｰ	4	(WITHOUT DNS)
50	16113-52121	*	WASHER,THRUST	ﾜｯｼｬ	4	(WITHOUT DNS)
51	12N53-52161		BOLT,FLANGE	ﾎﾞﾙﾄ	8	
52	12N53-52241		BEARING,TAPER-ROLLER	ﾍﾞｱﾘﾝｸﾞ	2	
53	12N53-52091		FLANGE,4C	ﾌﾗﾝｼﾞ	1	
54	12N53-52121		COVER,DUST	ｶﾊﾞｰ	1	

M E M O

M E M O

FIG.93 WHEEL BRAKE

(F7033710) ホイールブレーキ

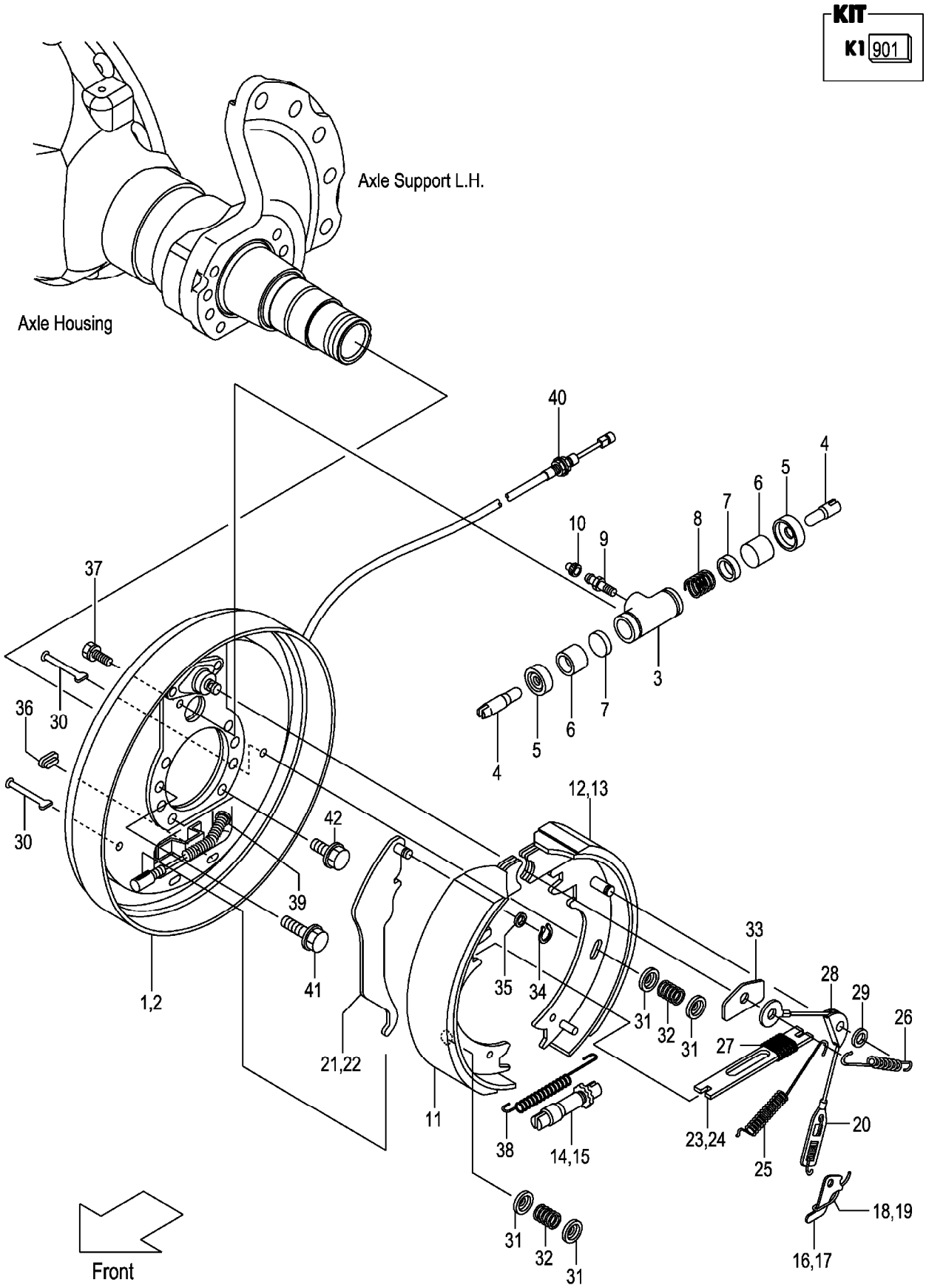

A:FG30C3 FG30T3 FG30W3
B:FD30C3 FD30T3 FD30W3

Item No	Part No.	Mark	Description		Req'd	Remarks : Serial No.
A1	22N93-70101		BRAKE-ASSY,RH	ﾌﾞﾚｰｷｱｯｾﾝ	1	INC.1,3-12,14,16,18,20,21, 23,25-40
A2	22N93-70201		BRAKE-ASSY,LH	ﾌﾞﾚｰｷｱｯｾﾝ	1	INC.2-11,13,15,17,19,20,22, 24-40
1	C-52-13117-21000-S		PLATE,BACK,RH	ﾌﾟﾚｰﾄ	1	
2	C-52-13117-11000-S		PLATE,BACK,LH	ﾌﾟﾚｰﾄ	1	
A3	C-52-13117-52000		CYL-ASSY,WHEEL	ﾎｲｰﾙｼﾘﾝﾀﾞｱｯｾﾝ	2	INC.3-10
901	C-K2-11242-52000	K1	KIT,WHEEL-CYL	ｼﾘﾝﾀﾞｷｯﾄ	2	INC.5,7,8
3	NO PART NO.	#	BODY,WHEEL-CYL	ﾎﾞﾃﾞｨ	2	
4	C-52-11207-02380		LINK,CONNECTING	ﾘﾝｸ	4	
5	NO PART NO.	#*	BOOT	ﾌﾞｰﾂ	4	
6	NO PART NO.	#	PISTON	ﾋﾟｽﾄﾝ	4	
7	NO PART NO.	#*	CUP,WHEEL-CYL	ｶｯﾌﾟ	4	
8	NO PART NO.	#*	SPRING,WHEEL-CYL	ｽﾌﾟﾘﾝｸﾞ	2	
9	C-51-B2101-02322		SCREW,BLEEDER	ｽｸﾘｭ	2	
10	C-52-30780-02340		CAP,BLEEDER-SCREW	ｷｬｯﾌﾟ	2	
11	C-52-13117-53000-Z		SHOE & LINING	ｼｭｰ&ﾗｲﾆﾝｸﾞ	2	
12	C-52-13117-83020-Z		SHOE & LINING,RH	ｼｭｰ&ﾗｲﾆﾝｸﾞ	1	
13	C-52-13117-83010-Z		SHOE & LINING,LH	ｼｭｰ&ﾗｲﾆﾝｸﾞ	1	
14	C-52-13117-23300-P		ADJUSTER,RH	ｱｼﾞｬｽﾀ	1	
15	C-52-13117-13300-P		ADJUSTER,LH	ｱｼﾞｬｽﾀ	1	
16	C-52-11218-25152		LEVER,RH	ﾚﾊﾞｰ	1	
17	C-52-11218-15152		LEVER,LH	ﾚﾊﾞｰ	1	
18	C-52-11218-25161		SPRING,RH	ｽﾌﾟﾘﾝｸﾞ	1	
19	C-52-11218-15161		SPRING,LH	ｽﾌﾟﾘﾝｸﾞ	1	
20	C-52-11227-05094		SPRING & CABLE	ｽﾌﾟﾘﾝｸﾞ&ｹｰﾌﾞﾙ	2	
21	C-52-11218-24502		LEVER,PARKING,RH	ﾚﾊﾞｰ	1	
22	C-52-11218-14502		LEVER,PARKING,LH	ﾚﾊﾞｰ	1	
23	C-52-11211-24530		STRUT,RH	ｽﾄﾗｯﾄ	1	
24	C-52-11211-14530		STRUT,LH	ｽﾄﾗｯﾄ	1	
25	C-52-11239-54011		SPRING	ｽﾌﾟﾘﾝｸﾞ	2	
26	C-52-11249-54010		SPRING	ｽﾌﾟﾘﾝｸﾞ	2	
27	C-52-11232-54540		SPRING	ｽﾌﾟﾘﾝｸﾞ	2	
28	C-52-11249-55310		SHEAVE	ｼｰﾌﾞ	2	
29	C-90-2300-1201		WASHER	ﾜｯｼｬ	2	
30	C-52-51308-54160		PIN,SHOE-HOLD	ﾋﾟﾝ	4	
31	C-52-51302-53840		CUP,SHOE-HOLD	ｶｯﾌﾟ	8	
32	C-52-51342-54110		SPRING,SHOE-HOLD	ｽﾌﾟﾘﾝｸﾞ	4	
33	C-52-11239-51270		PLATE,SHOE-GUIDE	ﾌﾟﾚｰﾄ	2	
34	C-52-10901-64560		RETAINER	ﾘﾃｰﾅ	2	
35	C-52-10901-64550		WASHER,WAVE	ﾜｯｼｬ	2	
36	C-52-11204-69010		COVER	ｶﾊﾞｰ	2	
37	C-52-13117-02350		BOLT	ﾎﾞﾙﾄ	4	
38	C-52-11239-54071		SPRING	ｽﾌﾟﾘﾝｸﾞ	2	
39	C-90-9200-0800		E-RING	Eﾘﾝｸﾞ	2	
40	C-52-13124-24600-S		CABLE,PARKING	ｹｰﾌﾞﾙ	2	
41	22N53-02212		BOLT	ﾎﾞﾙﾄ	12	
42	22N53-02201		BOLT	ﾎﾞﾙﾄ	4	

FIG.94 STEERING WHEEL UNIT

(F7034110) ｽﾃｱﾘﾝｸﾞﾎｲｰﾙﾕﾆｯﾄ

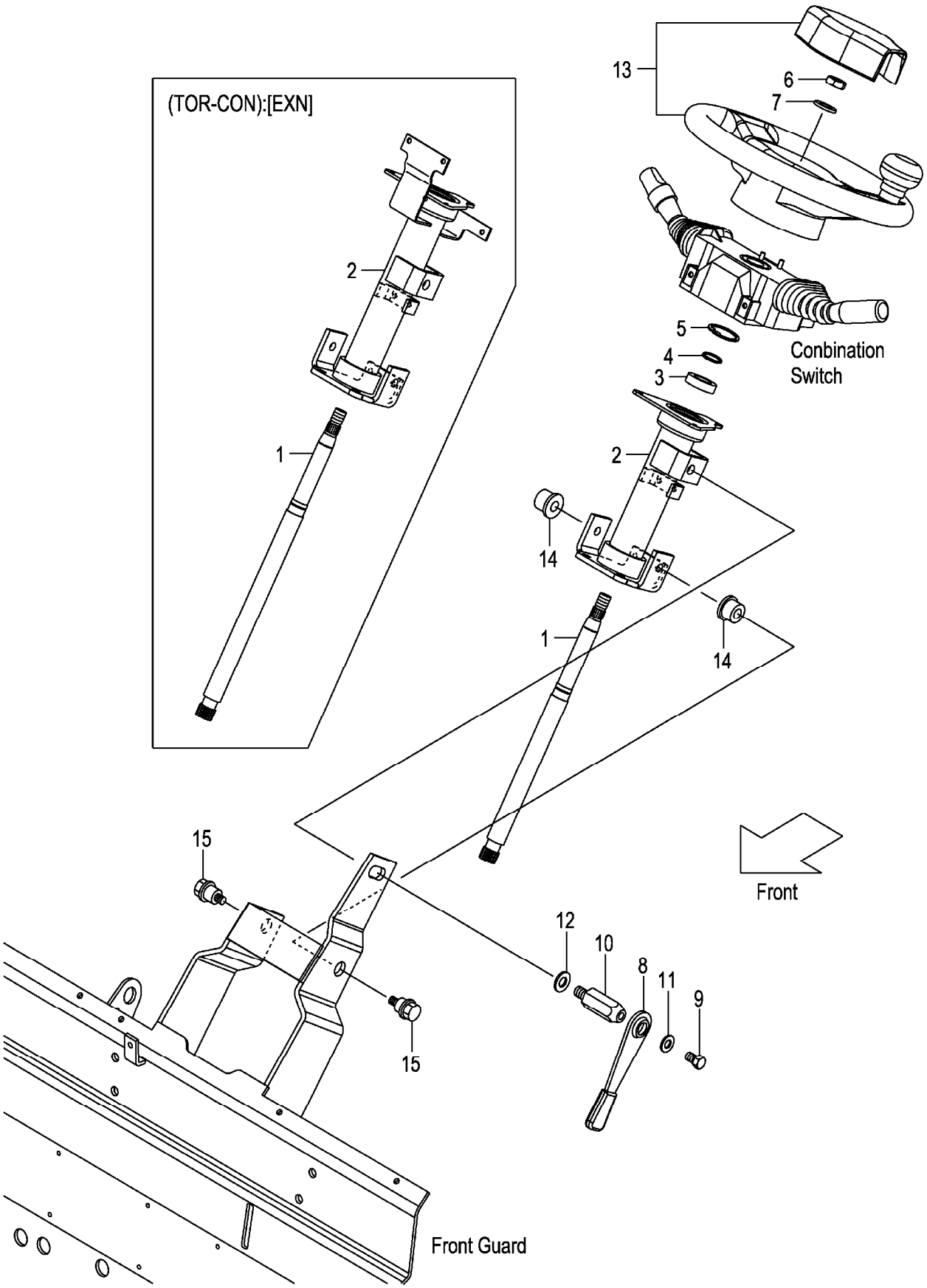

A:FG30C3 D:FD30C3
B:FG30T3 E:FD30T3
C:FG30W3 F:FD30W3

FIG.94
(F7034110)

Item No	Part No.	Mark	Description		Req'd	Remarks : Serial No.
1	22N54-12011		SHAFT,STEERING	ｼｬﾌﾄ	1	
-	52N52-62201		SHAFT,STEERING	ｼｬﾌﾄ	1	B,E [EXN]
2	22N54-12021		TUBE,STEERING-COLUMN	ﾁｭｰﾌﾞ	1	A,B,C:1-124 D,E,F:1-225
-	22N54-12022		TUBE,STEERING-COLUMN	ﾁｭｰﾌﾞ	1	A,B,C:125- D,E,F:226-
-	52N52-62101		TUBE,STEERING-COLUMN	ﾁｭｰﾌﾞ	1	B,E [EXN]
3	03020-06904		BEARING,BALL	ﾍﾞｱﾘﾝｸﾞ	1	
4	02100-00020		RING,SNAP	ｽﾅｯﾌﾟﾘﾝｸﾞ	1	
5	02110-00037		RING,SNAP	ｽﾅｯﾌﾟﾘﾝｸﾞ	1	
6	01402-10014		NUT	ﾅｯﾄ	1	
7	02000-00014		WASHER	ﾜｯｼｬ	1	
A1	239A4-12402		LEVER-ASSY,TILT-LOCK	ﾃｨﾙﾄﾛｯｸﾚﾊﾞｰｱｯｾﾝ	1	INC.8-11
8	239A4-12411		LEVER	ﾚﾊﾞｰ	1	
9	239A4-12441		BOLT	ﾎﾞﾙﾄ	1	
10	239A4-12431		BOLT,LOCK	ﾎﾞﾙﾄ	1	
11	214A4-12161		WASHER	ﾜｯｼｬ	1	
12	02000-00012		WASHER	ﾜｯｼｬ	1	
13	22N54-10201		WHEEL,STEERING	ﾎｲｰﾙ	1	
14	216G4-12101		BUSHING	ﾌﾞｯｼﾝｸﾞ	2	
15	216G4-12111		BOLT	ﾎﾞﾙﾄ	2	

FIG.95 ORBITROL
(F7034120) オービットロール

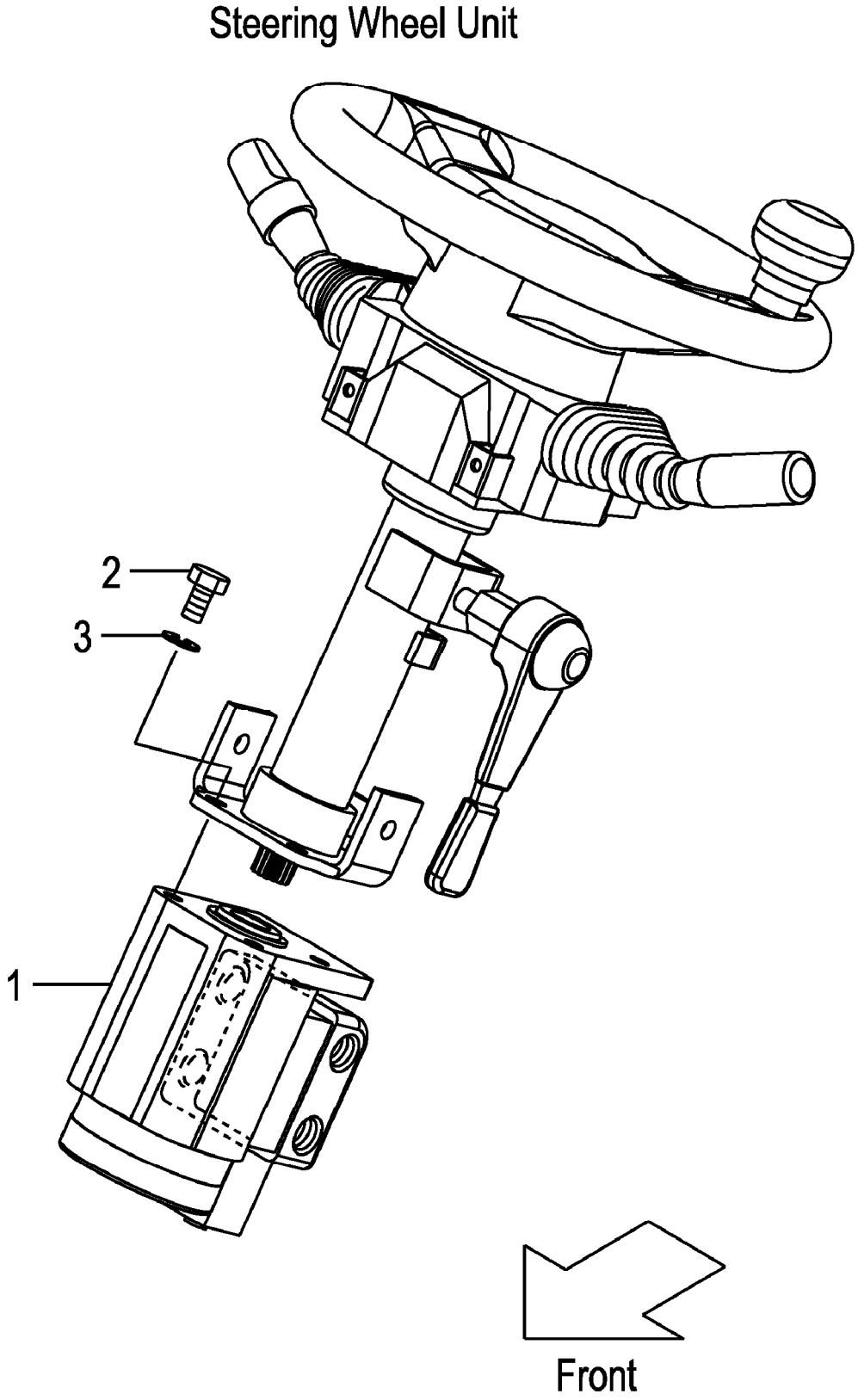

A:FG30C3 FG30T3 C:FD30C3 FD30T3
B:FG30W3 D:FD30W3

Item No	Part No.	Mark	Description		Req'd	Remarks : Serial No.
1	22N54-10301		UNIT,ORBITROL	ﾕﾆｯﾄ	1	
-	22N54-10311		UNIT,ORBITROL	ﾕﾆｯﾄ	1	[VSL]
2	01110-10025		BOLT	ﾎﾞﾙﾄ	4	A,B:1-109
						C,D:1-101
-	01113-10035		BOLT	ﾎﾞﾙﾄ	4	A,B:110-
						C,D:102-
3	02011-00010		WASHER	ﾜｯｼｬ	4	

FIG.96 ORBITROL [EXE][EXK][EXN]

(F7034130) オービットロール

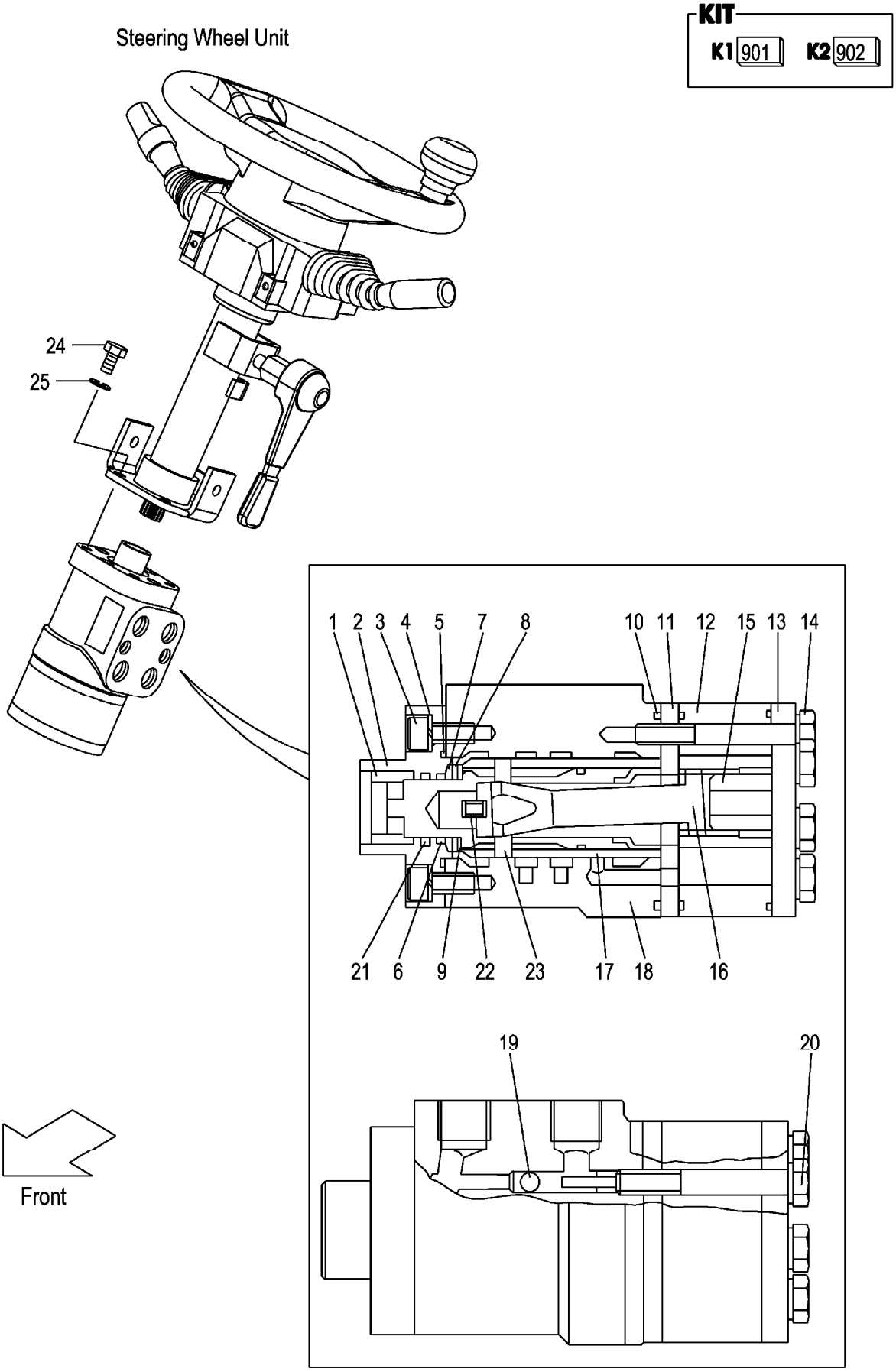

A:FG30C3 FG30T3
B:FD30C3 FD30T3

Item No	Part No.	Mark	Description		Req'd	Remarks : Serial No.
A1	HC32G4-10101		UNIT-ASSY,ORBITROL		1	[EXE][EXK][EXN] INC.1-23
				ｵｰﾋﾞｯﾄﾛｰﾙﾕﾆｯﾄｱｯｾﾝ		
901	HC516G2-42411	K1	KIT,SEAL	ｼｰﾙｷｯﾄ	1	[EXE][EXK][EXN] INC.5,6,10,21
902	HC26094-17021	K2	KIT,BEARING,NEEDLE	ﾆｰﾄﾞﾙﾍﾞｱﾘﾝｸﾞｷｯﾄ	1	[EXE][EXK][EXN] INC.7-9
1	NO PART NO.	#	BUSHING	ﾌﾞｯｼﾝｸﾞ	1	[EXE][EXK][EXN]
2	NO PART NO.	#	CAP,FRONT	ｷｬｯﾌﾟ	1	[EXE][EXK][EXN]
3	NO PART NO.	#	BOLT	ﾎﾞﾙﾄ	4	[EXE][EXK][EXN]
4	NO PART NO.	#	WASHER	ﾜｯｼｬ	4	[EXE][EXK][EXN]
5	NO PART NO.	#*	O-RING	Oﾘﾝｸﾞ	1	[EXE][EXK][EXN]
6	NO PART NO.	#*	SEAL,OIL	ｼｰﾙ	1	[EXE][EXK][EXN]
7	NO PART NO.	#*	RACE,BEARING	ﾚｰｽ	1	[EXE][EXK][EXN]
8	NO PART NO.	#*	BEARING,NEEDLE	ﾍﾞｱﾘﾝｸﾞ	1	[EXE][EXK][EXN]
9	NO PART NO.	#*	RACE,BEARING	ﾚｰｽ	1	[EXE][EXK][EXN]
10	NO PART NO.	#*	O-RING	Oﾘﾝｸﾞ	1	[EXE][EXK][EXN]
11	NO PART NO.	#	SPACER	ｽﾍﾟｰｻ	1	[EXE][EXK][EXN]
12	NO PART NO.	#	GEROTOR	ｼﾞﾛｰﾀ	1	[EXE][EXK][EXN]
13	NO PART NO.	#	CAP,END	ｷｬｯﾌﾟ	1	[EXE][EXK][EXN]
14	NO PART NO.	#	BOLT	ﾎﾞﾙﾄ	6	[EXE][EXK][EXN]
15	NO PART NO.	#	SPACER	ｽﾍﾟｰｻ	1	[EXE][EXK][EXN]
16	NO PART NO.	#	SHAFT,DRIVE	ｼｬﾌﾄ	1	[EXE][EXK][EXN]
17	NO PART NO.	#	SLEEVE	ｽﾘｰﾌﾞ	1	[EXE][EXK][EXN]
18	NO PART NO.	#	HOUSING	ﾊｳｼﾞﾝｸﾞ	1	[EXE][EXK][EXN]
19	NO PART NO.	#	BALL,STEEL	ﾎﾞｰﾙ	1	[EXE][EXK][EXN]
20	NO PART NO.	#	BOLT	ﾎﾞﾙﾄ	1	[EXE][EXK][EXN]
21	NO PART NO.	#*	O-RING	Oﾘﾝｸﾞ	1	[EXE][EXK][EXN]
22	NO PART NO.	#	SPRING	ｽﾌﾟﾘﾝｸﾞ	1	[EXE][EXK][EXN]
23	NO PART NO.	#	PIN	ﾋﾟﾝ	1	[EXE][EXK][EXN]
24	01113-10035		BOLT	ﾎﾞﾙﾄ	4	[EXE][EXK][EXN]
25	02011-00010		WASHER	ﾜｯｼｬ	4	[EXE][EXK][EXN]

FIG.97 ORBITROL FITTING

(F7034140) オービットロールフィッティング

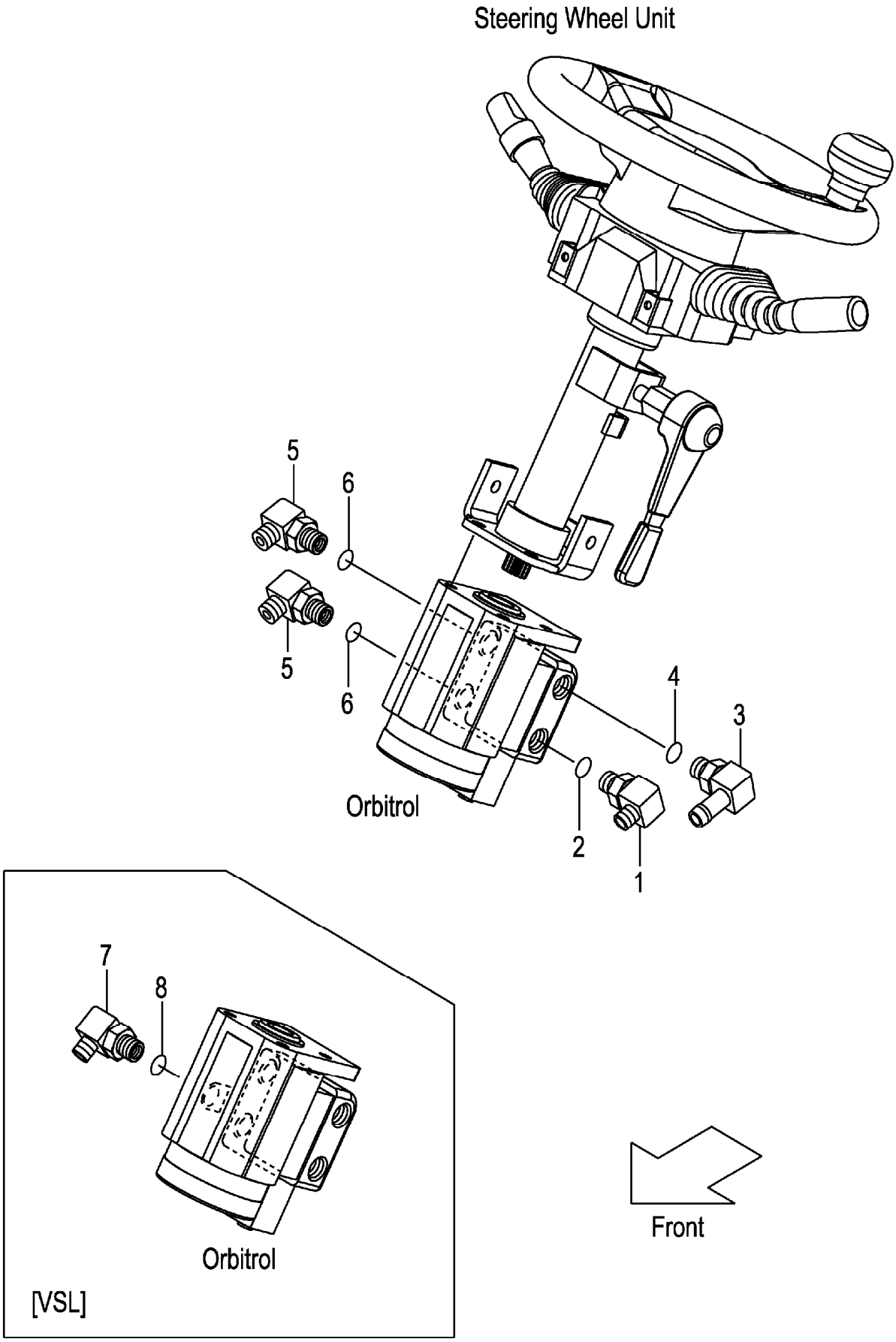

A:FG30C3 FG30T3 C:FD30C3 FD30T3
B:FG30W3 D:FD30W3

Item No	Part No.	Mark	Description		Req'd	Remarks : Serial No.
A1	24237-62331		ELBOW-ASSY	ｴﾙﾎﾞｱｯｾﾝ	1	INC.1,2
1	NO PART NO.	#	ELBOW	ｴﾙﾎﾞ	1	
2	03320-00140		O-RING	Oﾘﾝｸﾞ	1	
A2	243C7-80201		FITTING-ASSY,HOSE	ﾎｰｽﾌｨｯﾃｨﾝｸﾞｱｯｾﾝ	1	INC.3,4
3	NO PART NO.	#	FITTING,HOSE	ﾌｨｯﾃｨﾝｸﾞ	1	
4	03320-00140		O-RING	Oﾘﾝｸﾞ	1	
A3	04150-20303		ELBOW-ASSY	ｴﾙﾎﾞｱｯｾﾝ	2	INC.5,6
5	NO PART NO.	#	ELBOW	ｴﾙﾎﾞ	2	
6	03320-00140		O-RING	Oﾘﾝｸﾞ	2	
A4	04150-20202		ELBOW-ASSY	ｴﾙﾎﾞｱｯｾﾝ	1	[VSL] INC.7,8
7	NO PART NO.	#	ELBOW	ｴﾙﾎﾞ	1	[VSL]
8	03320-00110		O-RING	Oﾘﾝｸﾞ	1	[VSL]

FIG.98 STEERING AXLE

(F7034310) ステアリング゛アクスル

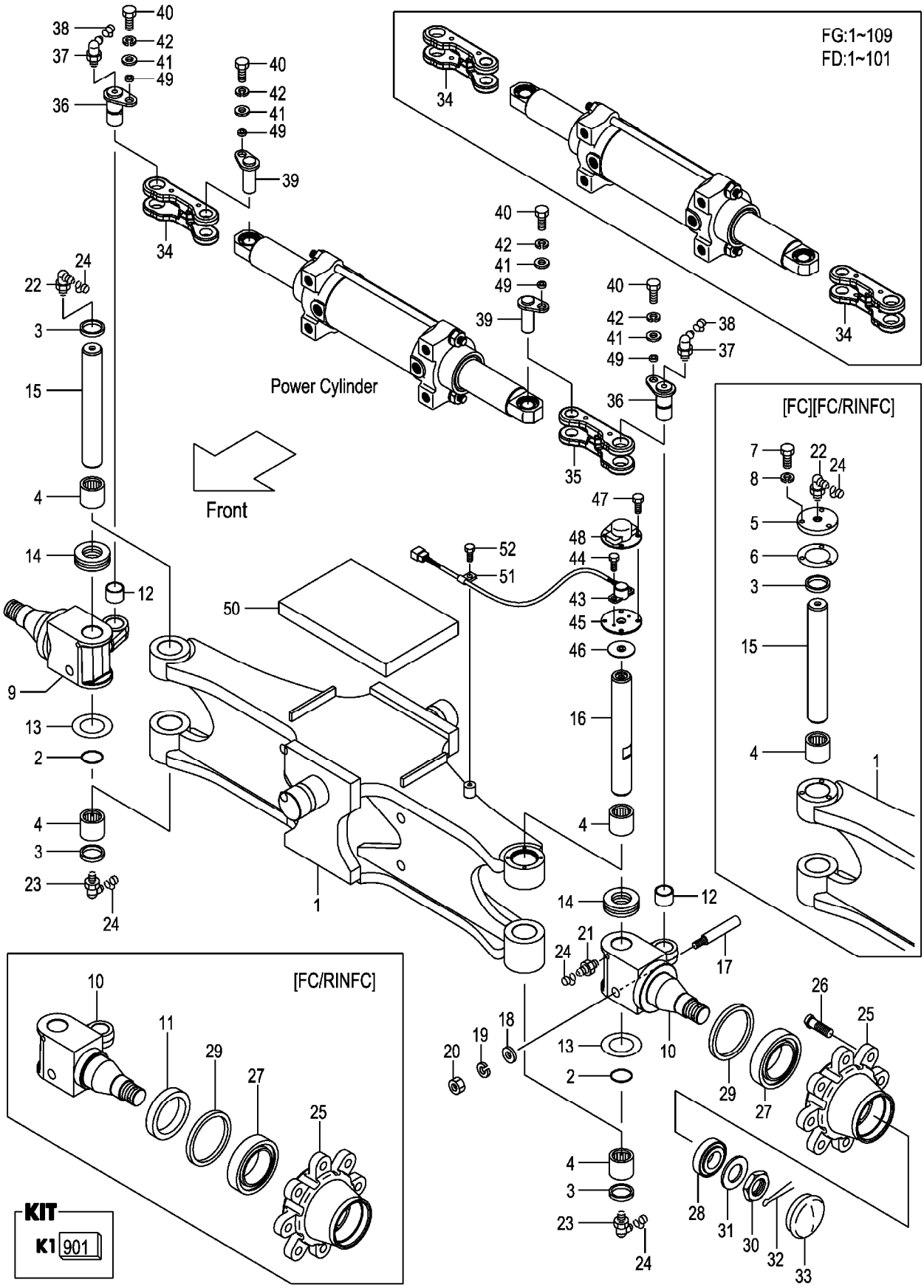

A:FG30C3 FG30T3 FG30W3
B:FD30C3 FD30T3 FD30W3

Item No	Part No.	Mark	Description		Req'd	Remarks : Serial No.
A1	22N54-30101		AXLE-ASSY,STEERING	ｽﾃｱﾘﾝｸﾞｱｸｽﾙｱｯｾﾝ	1	A:1-125 B:1-230 INC.1-4,9,10,12-33
-	22N54-30102		AXLE-ASSY,STEERING	ｽﾃｱﾘﾝｸﾞｱｸｽﾙｱｯｾﾝ	1	A:126- B:231- INC.1-4,9,10,12-33
-	52N53-70101		AXLE-ASSY,STEERING	ｽﾃｱﾘﾝｸﾞｱｸｽﾙｱｯｾﾝ	1	A:1-125 B:1-230 [FC] INC.1-10,12-33
-	52N53-70102		AXLE-ASSY,STEERING	ｽﾃｱﾘﾝｸﾞｱｸｽﾙｱｯｾﾝ	1	A:126- B:231- [FC] INC.1-10,12-33
-	52N53-70201		AXLE-ASSY,STEERING	ｽﾃｱﾘﾝｸﾞｱｸｽﾙｱｯｾﾝ	1	A:1-125 B:1-230 [FC/RINFC] INC.1-33
-	52N53-70202		AXLE-ASSY,STEERING	ｽﾃｱﾘﾝｸﾞｱｸｽﾙｱｯｾﾝ	1	A:126- B:231- [FC/RINFC] INC.1-33
901	215E4-39801	K1	KIT,REPAIR	ﾘﾍﾟｱｷｯﾄ	1	INC.2-4,13,14,17-20,22
1	22N54-30121		AXLE,STEERING	ｱｸｽﾙ	1	A:1-125 B:1-230
-	22N54-30122		AXLE,STEERING	ｱｸｽﾙ	1	A:126- B:231-
-	52N53-70121		AXLE,STEERING	ｱｸｽﾙ	1	A:1-125 B:1-230 [FC][FC/RINFC]
-	52N53-70122		AXLE,STEERING	ｱｸｽﾙ	1	A:126- B:231- [FC][FC/RINFC]
2	23654-32161	*	O-RING	Oﾘﾝｸﾞ	2	
3	214A4-32161	*	SEAL,DUST	ｼｰﾙ	3	
4	03146-13201	*	BEARING,NEEDLE	ﾍﾞｱﾘﾝｸﾞ	4	
5	514A3-72052		PLATE,CAP	ﾌﾟﾚｰﾄ	1	[FC][FC/RINFC]
6	514A3-72062		PACKING	ﾊﾟｯｷﾝｸﾞ	1	[FC][FC/RINFC]
7	01141-06012		BOLT	ﾎﾞﾙﾄ	3	[FC][FC/RINFC]
8	02010-10006		WASHER	ﾜｯｼｬ	3	[FC][FC/RINFC]
9	22N54-32501		KNUCKLE,RH	ﾅｯｸﾙ	1	
-	52N53-72201		KNUCKLE,RH	ﾅｯｸﾙ	1	[FC/RINFC]
10	22N54-32511		KNUCKLE,LH	ﾅｯｸﾙ	1	
-	52N53-72211		KNUCKLE,LH	ﾅｯｸﾙ	1	[FC/RINFC]
11	514A3-72211		SEAT,OIL-SEAL	ｼｰﾄ	2	[FC/RINFC]
12	22N54-32481		BUSHING	ﾌﾞｯｼﾝｸﾞ	2	
13	22214-30321	*	SHIM	ｼﾑ	6	
14	03126-83201	*	BEARING,THRUST	ﾍﾞｱﾘﾝｸﾞ	2	
15	24454-32232		KINGPIN	ｷﾝｸﾞﾋﾟﾝ	1	
16	22N54-32201		KINGPIN	ｷﾝｸﾞﾋﾟﾝ	1	
17	215E4-32341	*	PIN,LOCK	ﾋﾟﾝ	2	
18	02000-00010	*	WASHER	ﾜｯｼｬ	2	
19	02010-00010	*	WASHER	ﾜｯｼｬ	2	
20	01400-00010	*	NUT	ﾅｯﾄ	2	

FIG.98 STEERING AXLE

(F7034310) ステアリング゛アクスル

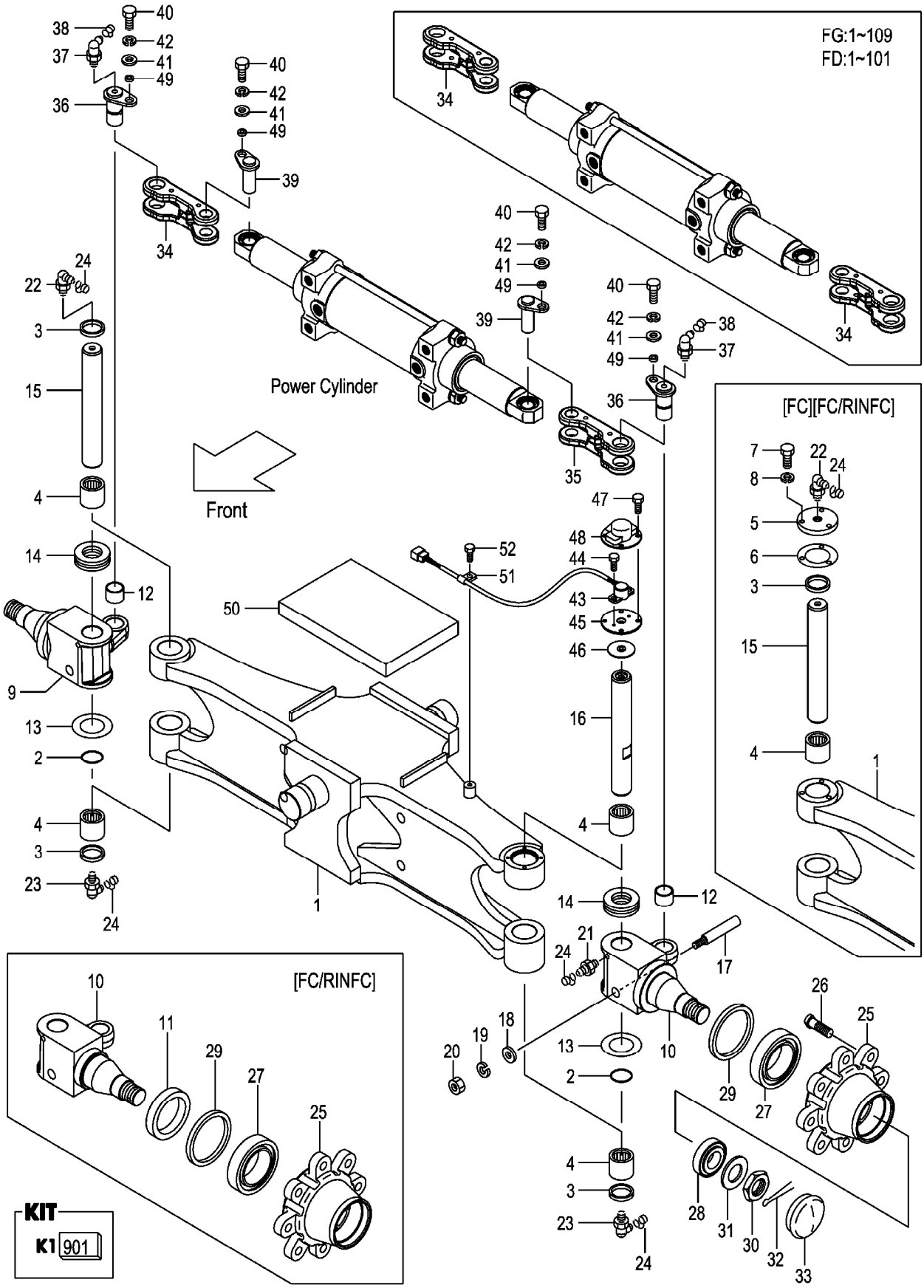

A:FG30C3 FG30T3 FG30W3
B:FD30C3 FD30T3 FD30W3

Item No	Part No.	Mark	Description		Req'd	Remarks : Serial No.
21	214A8-52051		FITTING	ﾌｨｯﾃｨﾝｸﾞ	1	
22	04901-00190	*	FITTING	ﾌｨｯﾃｨﾝｸﾞ	1	
23	04901-00191		FITTING	ﾌｨｯﾃｨﾝｸﾞ	2	
24	22199-12401		CAP,NIPPLE	ｷｬｯﾌﾟ	4	
25	214A4-32041		HUB,REAR	ﾊﾌﾞ	2	
26	23654-32041		BOLT,HUB	ﾎﾞﾙﾄ	16	
27	03071-30211		BEARING,TAPER-ROLLER	ﾍﾞｱﾘﾝｸﾞ	2	
28	03071-30207		BEARING,TAPER-ROLLER	ﾍﾞｱﾘﾝｸﾞ	2	
29	03217-08501		SEAL,OIL	ｼｰﾙ	2	
30	01412-00030		NUT,CASTLE	ﾅｯﾄ	2	
31	02000-00030		WASHER	ﾜｯｼｬ	2	
32	02200-06055		PIN,COTTER	ﾋﾟﾝ	2	
33	214A4-32051		CAP	ｷｬｯﾌﾟ	2	
34	22N54-32801		YOKE	ﾖｰｸ	2	A:1-109
						B:1-101
-	22N54-32941		YOKE,RH	ﾖｰｸ	1	A:110-134
						B:102-289
-	22N54-32351		YOKE,RH	ﾖｰｸ	1	A:135-
						B:290-
35	22N54-32971		YOKE,LH	ﾖｰｸ	1	A:110-134
						B:102-289
-	22N54-32361		YOKE,LH	ﾖｰｸ	1	A:135-
						B:290-
36	22N54-32131		PIN	ﾋﾟﾝ	2	
37	04901-00190		FITTING	ﾌｨｯﾃｨﾝｸﾞ	2	
38	22199-12401		CAP,NIPPLE	ｷｬｯﾌﾟ	2	
39	22N54-32151		PIN	ﾋﾟﾝ	2	
40	01103-08016		BOLT	ﾎﾞﾙﾄ	4	
41	02000-00008		WASHER	ﾜｯｼｬ	4	
42	02011-00008		WASHER	ﾜｯｼｬ	4	
43	22N54-32211		POTENTIOMETER	ﾎﾟﾃﾝｼｵﾒｰﾀ	1	
44	01185-04010		BOLT	ﾎﾞﾙﾄ	2	
45	22N54-32221		ADAPTER	ｱﾀﾞﾌﾟﾀ	1	
46	22N54-32231		PACKING	ﾊﾟｯｷﾝｸﾞ	1	
47	01030-06010		BOLT	ﾎﾞﾙﾄ	4	
48	22N54-32241		COVER,POTENTIOMETER	ｶﾊﾞｰ	1	
49	22N54-32181		COLLAR	ｶﾗｰ	4	
50	22N54-32401		RUBBER	ﾗﾊﾞｰ	1	A:1-125
						B:1-230
-	22N54-32402		RUBBER	ﾗﾊﾞｰ	1	A:126-
						B:231-
51	26602-42041		CLIP	ｸﾘｯﾌﾟ	1	
52	01185-08016		BOLT	ﾎﾞﾙﾄ	1	

M E M O

M E M O

FIG.99 STEERING AXLE [EXE][EXK][EXN]

(F7034320) ステアリング゛アクスル

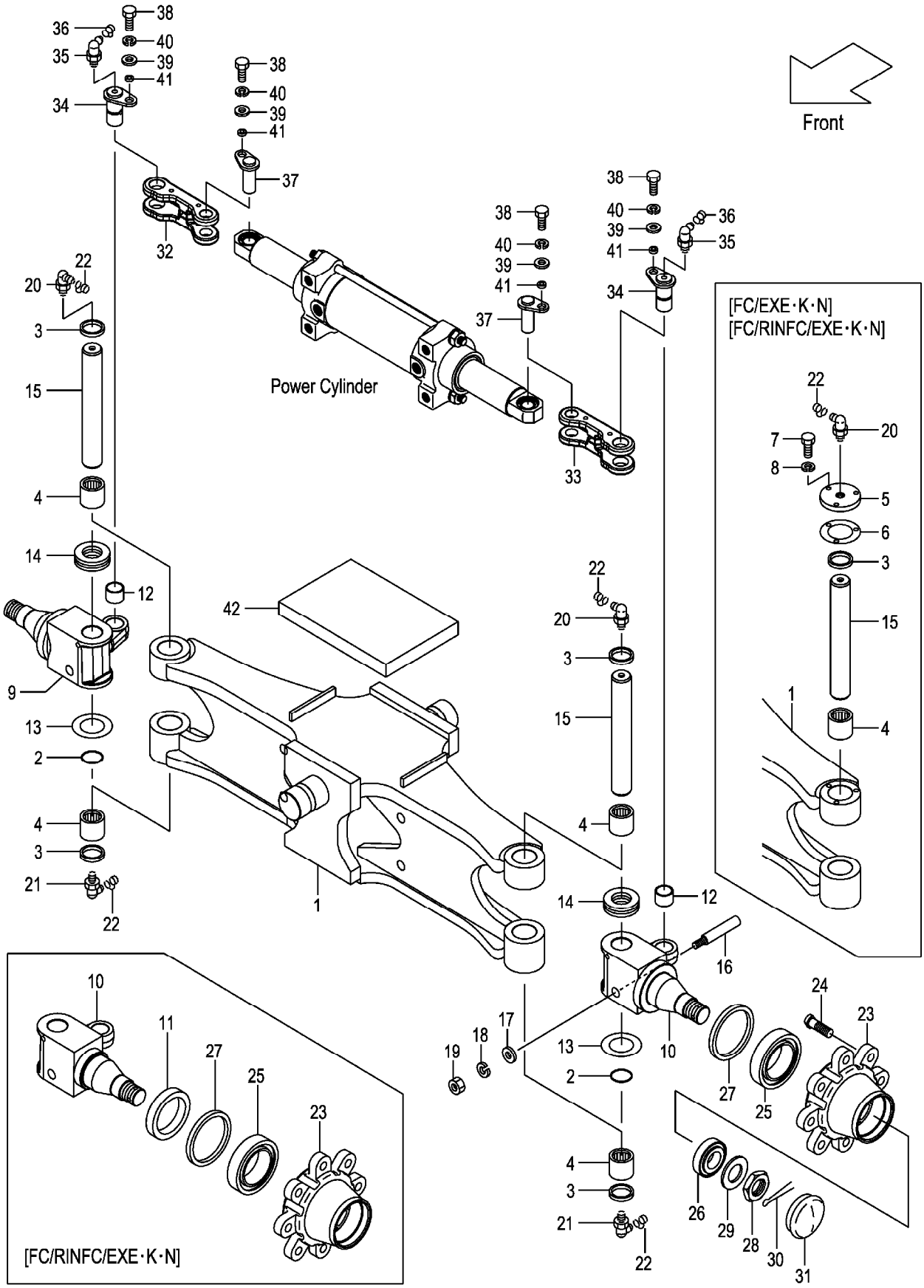

A:FG30C3 FG30T3
B:FD30C3 FD30T3

Item No	Part No.	Mark	Description		Req'd	Remarks : Serial No.
A1	52N53-80101		AXLE-ASSY,STEERING	ｽﾃｱﾘﾝｸﾞｱｸｽﾙｱｯｾﾝ	1	A:1-125 B:1-230 [EXE][EXK][EXN] INC.1-4,9,10,12-33
-	52N53-80102		AXLE-ASSY,STEERING	ｽﾃｱﾘﾝｸﾞｱｸｽﾙｱｯｾﾝ	1	A:126- B:231- [EXE][EXK][EXN] INC.1-4,9,10,12-33
-	52N53-70301		AXLE-ASSY,STEERING	ｽﾃｱﾘﾝｸﾞｱｸｽﾙｱｯｾﾝ	1	A:1-125 B:1-230 [FC/EXE&K&N] INC.1-10,12-31
-	52N53-70302		AXLE-ASSY,STEERING	ｽﾃｱﾘﾝｸﾞｱｸｽﾙｱｯｾﾝ	1	A:126- B:231- [FC/EXE&K&N] INC.1-10,12-31
-	52N53-70401		AXLE-ASSY,STEERING	ｽﾃｱﾘﾝｸﾞｱｸｽﾙｱｯｾﾝ	1	A:1-125 B:1-230 [FC/RINFC/EXE&K&N] INC.1-31
-	52N53-70402		AXLE-ASSY,STEERING	ｽﾃｱﾘﾝｸﾞｱｸｽﾙｱｯｾﾝ	1	A:126- B:231- [FC/RINFC/EXE&K&N] INC.1-31
1	52N53-80121		AXLE,STEERING	ｱｸｽﾙ	1	A:1-125 B:1-230 [EXE][EXK][EXN]
-	52N53-80122		AXLE,STEERING	ｱｸｽﾙ	1	A:126- B:231- [EXE][EXK][EXN]
-	52N53-70321		AXLE,STEERING	ｱｸｽﾙ	1	A:1-125 B:1-230 [FC/EXE&K&N] [FC/RINFC/EXE&K&N]
-	52N53-70322		AXLE,STEERING	ｱｸｽﾙ	1	A:126- B:231- [FC/EXE&K&N] [FC/RINFC/EXE&K&N]
2	23654-32161		O-RING	Oﾘﾝｸﾞ	2	[EXE][EXK][EXN]
3	214A4-32161		SEAL,DUST	ｼｰﾙ	4	[EXE][EXK][EXN]
4	03146-13201		BEARING,NEEDLE	ﾍﾞｱﾘﾝｸﾞ	4	[EXE][EXK][EXN]
5	514A3-72052		PLATE,CAP	ﾌﾟﾚｰﾄ	2	[FC/EXE&K&N] [FC/RINFC/EXE&K&N]
6	514A3-72062		PACKING	ﾊﾟｯｷﾝｸﾞ	2	[FC/EXE&K&N] [FC/RINFC/EXE&K&N]
7	01141-06012		BOLT	ﾎﾞﾙﾄ	6	[FC/EXE&K&N] [FC/RINFC/EXE&K&N]
8	02010-10006		WASHER	ﾜｯｼｬ	6	[FC/EXE&K&N] [FC/RINFC/EXE&K&N]
9	22N54-32501		KNUCKLE,RH	ﾅｯｸﾙ	1	[EXE][EXK][EXN]
-	52N53-72201		KNUCKLE,RH	ﾅｯｸﾙ	1	[FC/RINFC/EXE&K&N]
10	22N54-32511		KNUCKLE,LH	ﾅｯｸﾙ	1	[EXE][EXK][EXN]
-	52N53-72211		KNUCKLE,LH	ﾅｯｸﾙ	1	[FC/RINFC/EXE&K&N]
11	514A3-72211		SEAT,OIL-SEAL	ｼｰﾄ	2	[FC/RINFC/EXE&K&N]

FIG.99 STEERING AXLE [EXE][EXK][EXN]

(F7034320) ステアリング゛アクスル

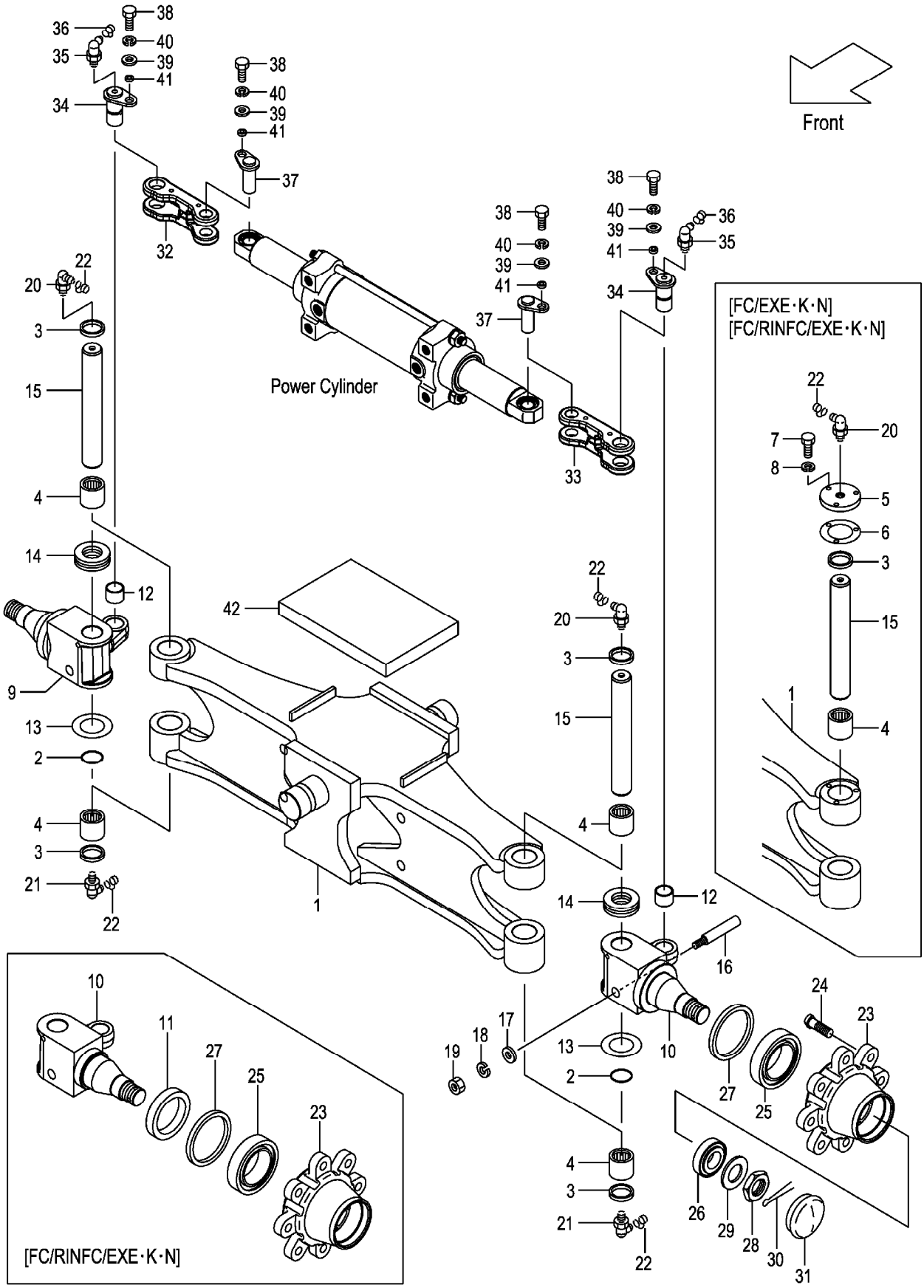

A:FG30C3 FG30T3
B:FD30C3 FD30T3

Item No	Part No.	Mark	Description		Req'd	Remarks : Serial No.
12	22N54-32481		BUSHING	ﾌﾞｯｼﾝｸﾞ	2	[EXE][EXK][EXN]
13	22214-30321		SHIM	ｼﾑ	6	[EXE][EXK][EXN]
14	03126-83201		BEARING,THRUST	ﾍﾞｱﾘﾝｸﾞ	2	[EXE][EXK][EXN]
15	24454-32232		KINGPIN	ｷﾝｸﾞﾋﾟﾝ	2	[EXE][EXK][EXN]
16	215E4-32341		PIN,LOCK	ﾋﾟﾝ	2	[EXE][EXK][EXN]
17	02000-00010		WASHER	ﾜｯｼｬ	2	[EXE][EXK][EXN]
18	02010-00010		WASHER	ﾜｯｼｬ	2	[EXE][EXK][EXN]
19	01400-00010		NUT	ﾅｯﾄ	2	[EXE][EXK][EXN]
20	04901-00190		FITTING	ﾌｨｯﾃｨﾝｸﾞ	2	[EXE][EXK][EXN]
21	04901-00191		FITTING	ﾌｨｯﾃｨﾝｸﾞ	2	[EXE][EXK][EXN]
22	22199-12401		CAP,NIPPLE	ｷｬｯﾌﾟ	4	[EXE][EXK][EXN]
23	214A4-32041		HUB,REAR	ﾊﾌﾞ	2	[EXE][EXK][EXN]
24	23654-32041		BOLT,HUB	ﾎﾞﾙﾄ	16	[EXE][EXK][EXN]
25	03071-30211		BEARING,TAPER-ROLLER	ﾍﾞｱﾘﾝｸﾞ	2	[EXE][EXK][EXN]
26	03071-30207		BEARING,TAPER-ROLLER	ﾍﾞｱﾘﾝｸﾞ	2	[EXE][EXK][EXN]
27	03217-08501		SEAL,OIL	ｼｰﾙ	2	[EXE][EXK][EXN]
28	01412-00030		NUT,CASTLE	ﾅｯﾄ	2	[EXE][EXK][EXN]
29	02000-00030		WASHER	ﾜｯｼｬ	2	[EXE][EXK][EXN]
30	02200-06055		PIN,COTTER	ﾋﾟﾝ	2	[EXE][EXK][EXN]
31	214A4-32051		CAP	ｷｬｯﾌﾟ	2	[EXE][EXK][EXN]
32	22N54-32941		YOKE,RH	ﾖｰｸ	1	A:1-134 B:1-289 [EXE][EXK][EXN]
-	22N54-32351		YOKE,RH	ﾖｰｸ	1	A:135- B:290- [EXE][EXK][EXN]
33	22N54-32971		YOKE,LH	ﾖｰｸ	1	A:1-134 B:1-289 [EXE][EXK][EXN]
-	22N54-32361		YOKE,LH	ﾖｰｸ	1	A:135- B:290- [EXE][EXK][EXN]
34	22N54-32131		PIN	ﾋﾟﾝ	2	[EXE][EXK][EXN]
35	04901-00190		FITTING	ﾌｨｯﾃｨﾝｸﾞ	2	[EXE][EXK][EXN]
36	22199-12401		CAP,NIPPLE	ｷｬｯﾌﾟ	2	[EXE][EXK][EXN]
37	22N54-32151		PIN	ﾋﾟﾝ	2	[EXE][EXK][EXN]
38	01103-08016		BOLT	ﾎﾞﾙﾄ	4	[EXE][EXK][EXN]
39	02000-00008		WASHER	ﾜｯｼｬ	4	[EXE][EXK][EXN]
40	02011-00008		WASHER	ﾜｯｼｬ	4	[EXE][EXK][EXN]
41	22N54-32181		COLLAR	ｶﾗｰ	4	[EXE][EXK][EXN]
42	22N54-32401		RUBBER	ﾗﾊﾞｰ	1	A:1-125 B:1-230 [EXE][EXK][EXN]
-	22N54-32402		RUBBER	ﾗﾊﾞｰ	1	A:126- B:231- [EXE][EXK][EXN]

M E M O

M E M O

FIG.100 AXLE SUPPORT

(F7034330) アクスルサポート

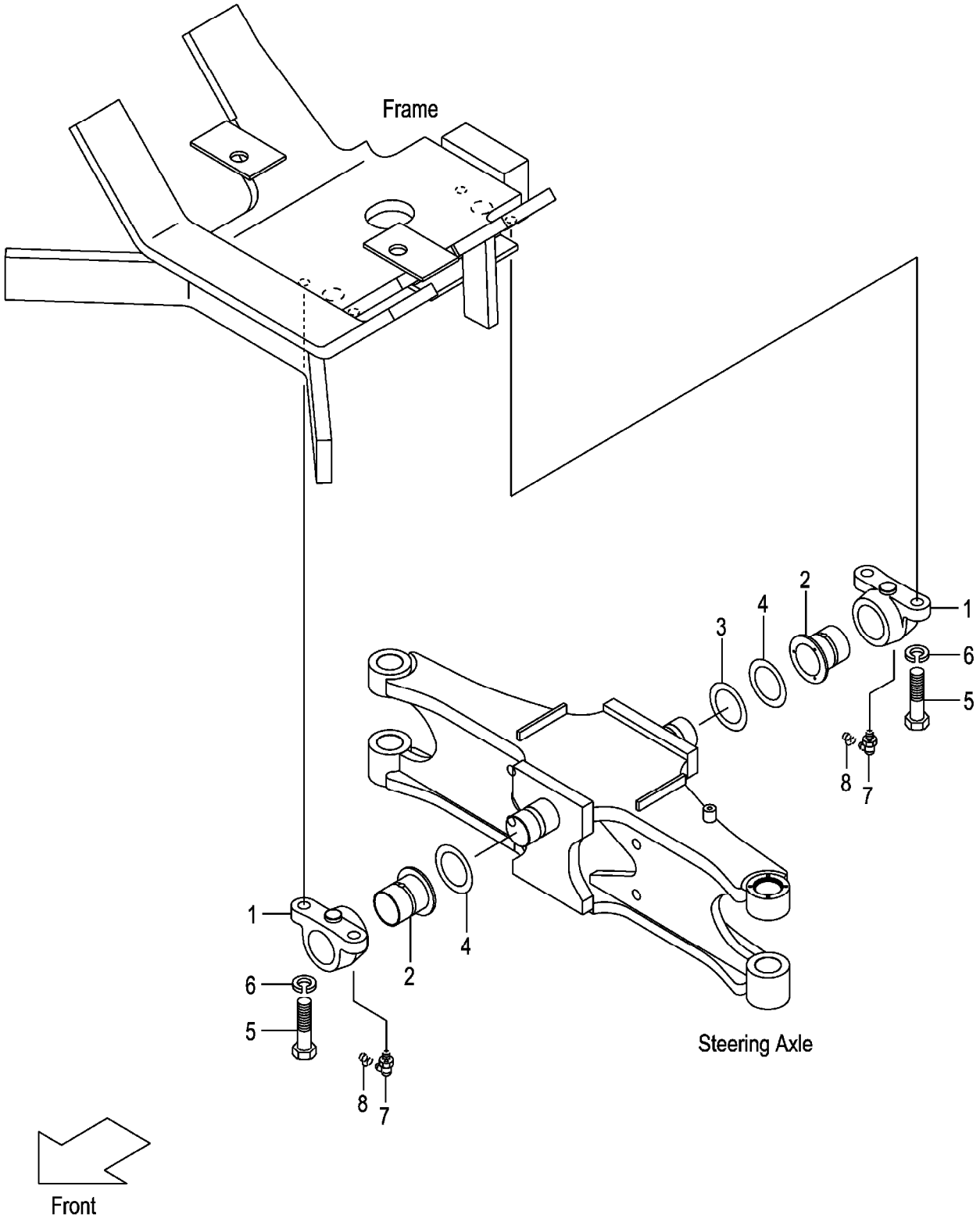

A:FG30C3 FG30T3 FG30W3
B:FD30C3 FD30T3 FD30W3

Item No	Part No.	Mark	Description	Req'd	Remarks : Serial No.
1	22N54-32311		SUPPORT,REAR-AXLE サポート	2	
2	22N54-32321		BUSHING,AXLE-SUPPORT ブッシング	2	
3	214A4-32201		SHIM,T-0.5 シム	1	
4	214A4-32211		SHIM,T-1.0 シム	2	
5	01100-16045		BOLT ボルト	4	
6	02010-00016		WASHER ワッシャ	4	
7	04901-00190		FITTING フィッティング	2	
8	22199-12401		CAP,NIPPLE キャップ	2	

FIG.101 HUB NUT

(F7034410) ﾊﾌﾞﾅｯﾄ

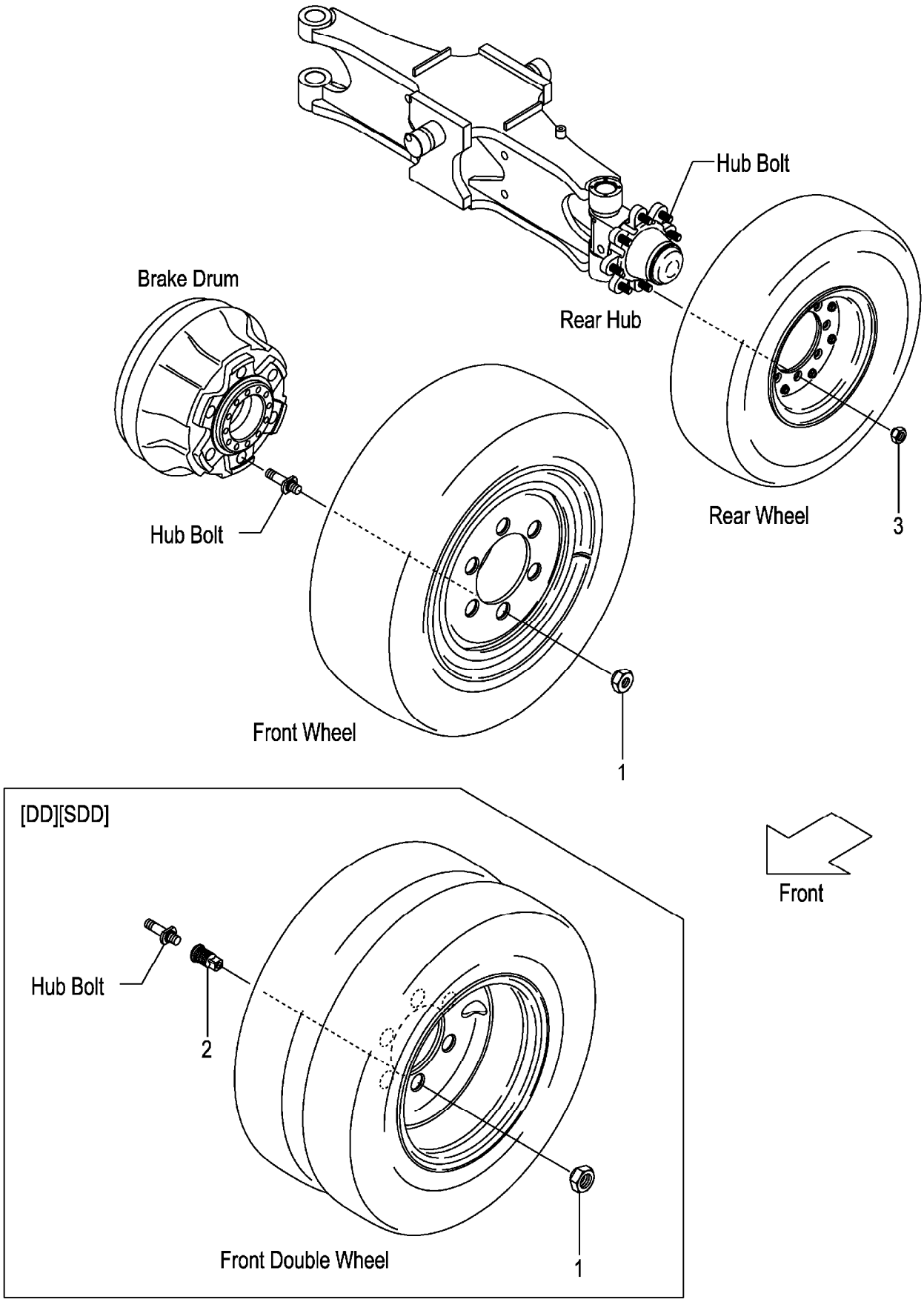

A:FG30C3 FG30T3 FG30W3
B:FD30C3 FD30T3 FD30W3

Item No	Part No.	Mark	Description	Req'd	Remarks : Serial No.
1	23913-02041		NUT,HUB ナット	12	(FRONT)
-	514J3-72051		NUT,HUB ナット	12	[FC](FRONT)
-	23813-00081		NUT,HUB ナット	12	[DD][SDD](FRONT)
-	514A3-72101		NUT,HUB ナット	12	[FC/DD][FC/SDD](FRONT)
2	23813-00071		NUT,INNER ナット	12	[DD][SDD][FC/DD][FC/SDD] (FRONT)
3	23654-34051		NUT,HUB ナット	16	(REAR)
-	57045-52151		NUT,HUB ナット	16	[FC](REAR)

FIG.102 FENDER

(F7034420) ﾌｪﾝﾀﾞ

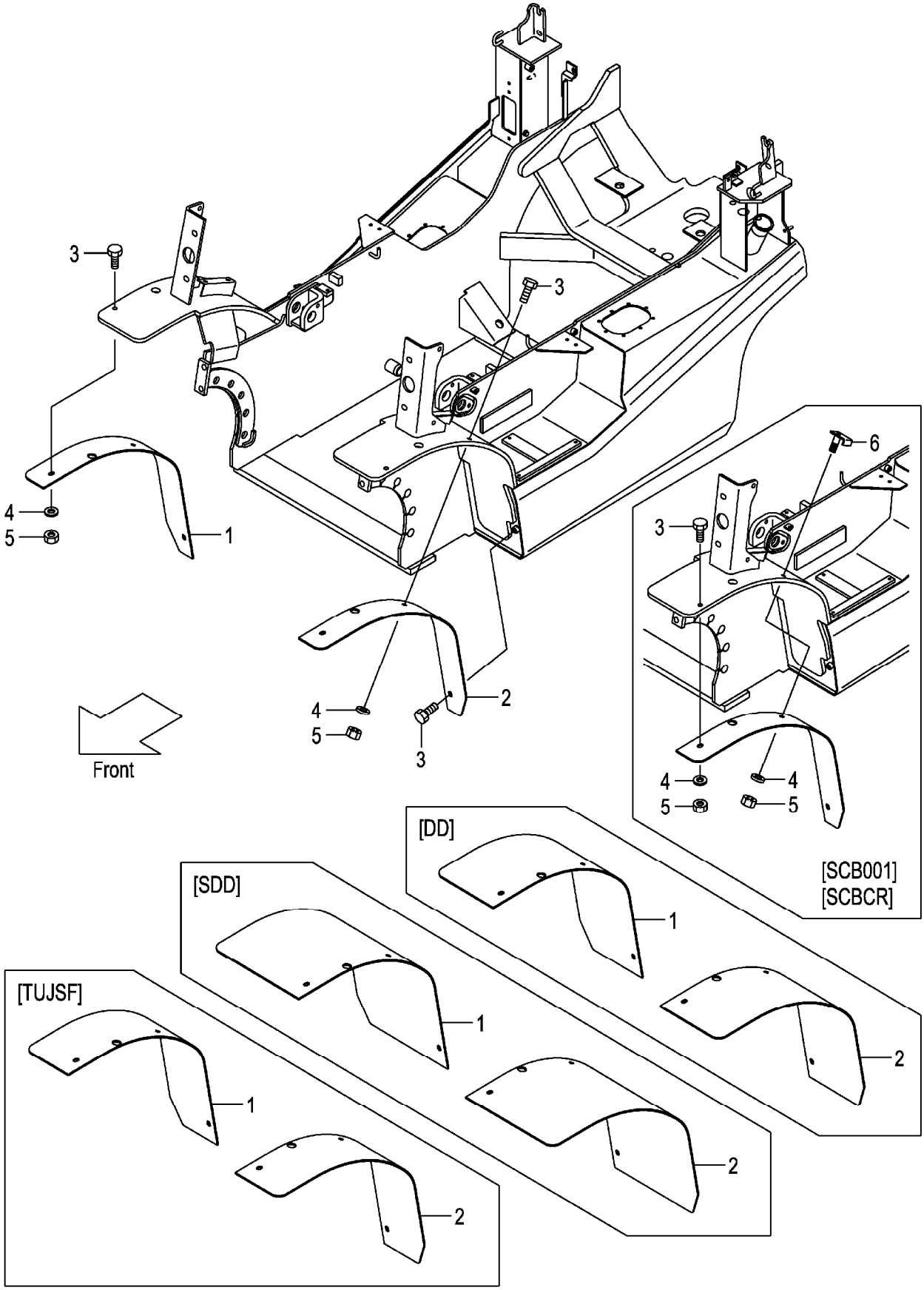

A:FG30C3 FG30T3 C:FD30C3 FD30T3
B:FG30W3 D:FD30W3

Item No	Part No.	Mark	Description		Req'd	Remarks : Serial No.
1	22N96-12201		FENDER,FRONT,RH	ﾌｪﾝﾀﾞ	1	
-	52N97-42001		FENDER,FRONT,RH	ﾌｪﾝﾀﾞ	1	[DD]
-	52N97-42021		FENDER,FRONT,RH	ﾌｪﾝﾀﾞ	1	[SDD]
-	52N97-42041		FENDER,FRONT,RH	ﾌｪﾝﾀﾞ	1	[TUJSF]
2	22N96-12211		FENDER,FRONT,LH	ﾌｪﾝﾀﾞ	1	
-	52N97-42011		FENDER,FRONT,LH	ﾌｪﾝﾀﾞ	1	[DD]
-	52N97-42031		FENDER,FRONT,LH	ﾌｪﾝﾀﾞ	1	[SDD]
-	52N97-42051		FENDER,FRONT,LH	ﾌｪﾝﾀﾞ	1	[TUJSF]
3	01186-10030		BOLT	ﾎﾞﾙﾄ	6	
-	01186-10030		BOLT	ﾎﾞﾙﾄ	4	[SCB001]
-	01186-10030		BOLT	ﾎﾞﾙﾄ	4	A,B,C [SCBCR]
4	02000-00010		WASHER	ﾜｯｼｬ	4	
5	01400-00010		NUT	ﾅｯﾄ	4	
6	52N55-32211		BOLT,FENDER	ﾎﾞﾙﾄ	2	[SCB001]
-	52N55-32211		BOLT,FENDER	ﾎﾞﾙﾄ	2	A,B,C [SCBCR]

FIG.103 FRONT WHEEL

(F7034430) フロントホイール

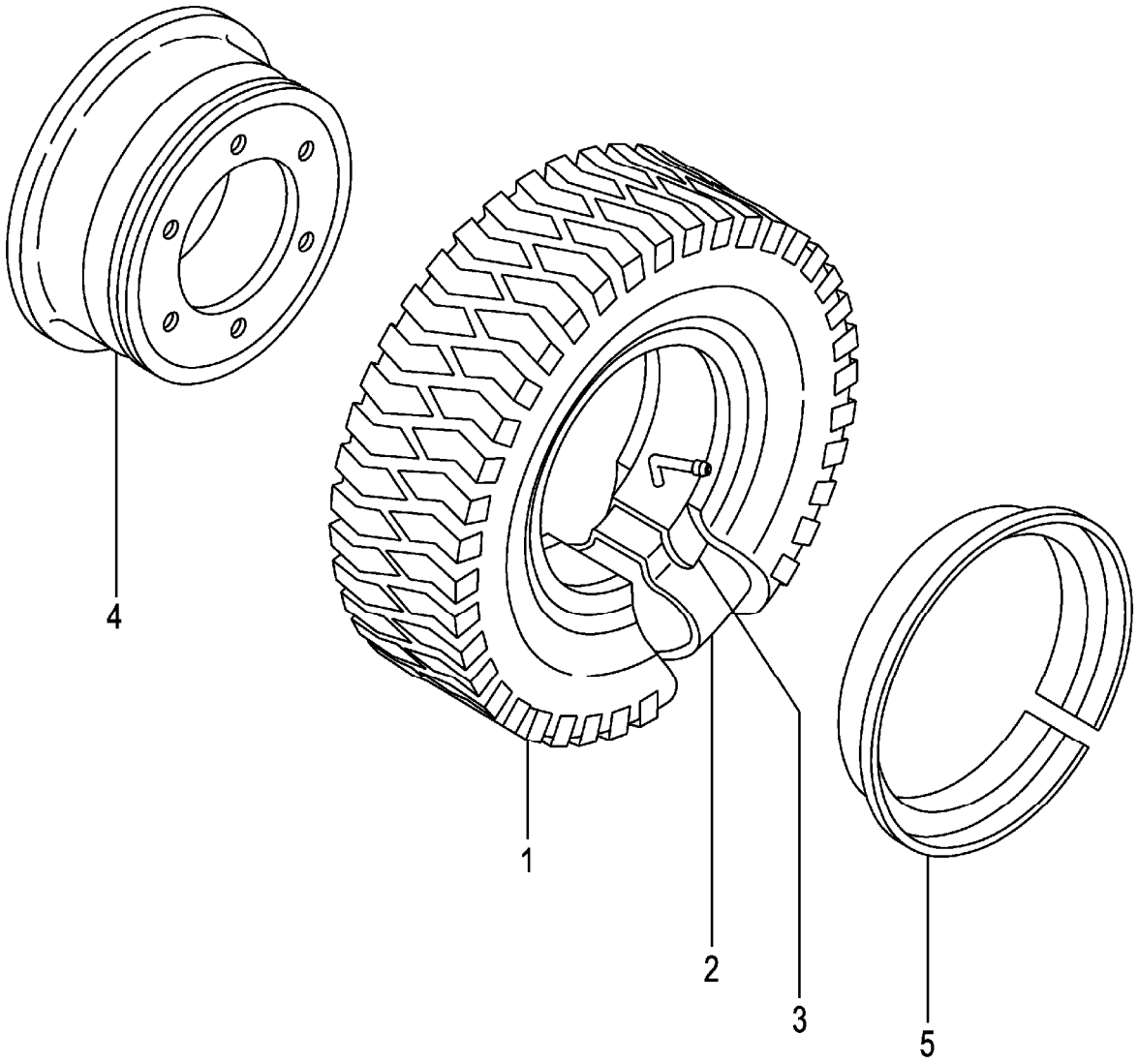

A:FG30C3 FG30T3 FG30W3
B:FD30C3 FD30T3 FD30W3

Item No	Part No.	Mark	Description		Req'd	Remarks : Serial No.
A1	24454-40201		WHEEL-ASSY,FRONT	ﾌﾛﾝﾄﾎｲｰﾙｱｯｾﾝ	2	INC.1-5
A2	24454-40211		TIRE-ASSY	ﾀｲﾔｱｯｾﾝ	2	INC.1-3
1	52436-82101		TIRE,28-9-15-12	ﾀｲﾔ	2	
2	52436-82111		TUBE,28-9-15-12T	ﾁｭｰﾌﾞ	2	
3	52436-82121		FLAP,28-9-15-12F	ﾌﾗｯﾌﾟ	2	
A3	24454-40221		RIM-ASSY,700T-15	ﾘﾑｱｯｾﾝ	2	INC.4,5
4	NO PART NO.	#	RIM & DISK	ﾘﾑ & ﾃﾞｨｽｸ	2	
5	22439-44031		RING,SIDE	ﾘﾝｸﾞ	2	

FIG.104 FRONT WHEEL [TJ F][TJSF][TS F]

(F7034450) フロントホイール

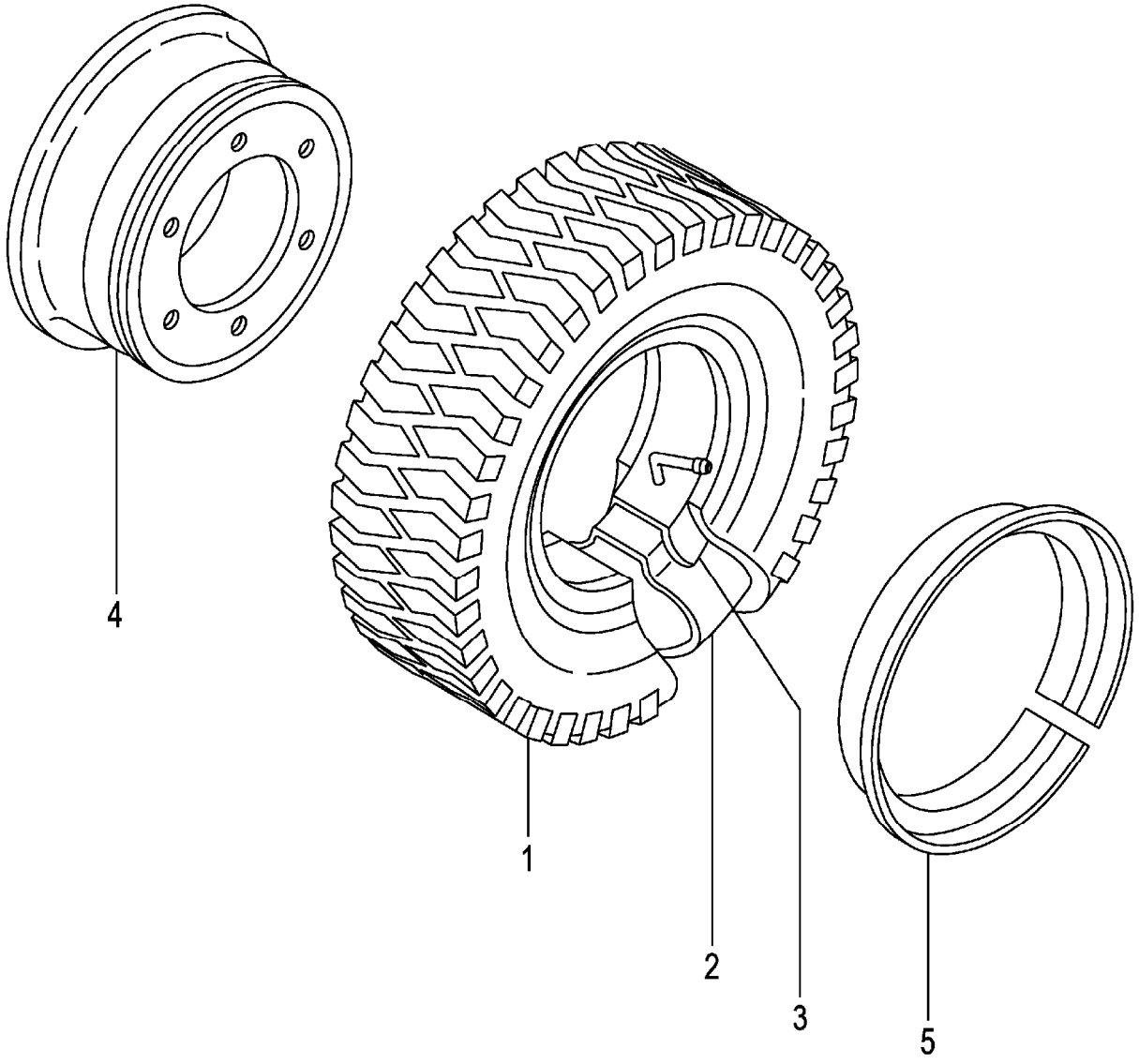

A:FG30C3 FG30T3 FG30W3
B:FD30C3 FD30T3 FD30W3

Item No	Part No.	Mark	Description		Req'd	Remarks : Serial No.
A1	24454-40201		WHEEL-ASSY,FRONT	ﾌﾛﾝﾄﾎｲｰﾙｱｯｾﾝ	2	[TJ F] INC.1-5
-	539F7-40401		WHEEL-ASSY,FRONT	ﾌﾛﾝﾄﾎｲｰﾙｱｯｾﾝ	2	[TJSF] INC.1-5
-	539F7-40601		WHEEL-ASSY,FRONT	ﾌﾛﾝﾄﾎｲｰﾙｱｯｾﾝ	2	[TS F] INC.1-5
A2	24454-40211		TIRE-ASSY	ﾀｲﾔｱｯｾﾝ	2	[TJ F] INC.1-3
1	52436-82101		TIRE,28-9-15-12	ﾀｲﾔ	2	[TJ F]
-	06005-81515		TIRE,28-9-15-12	ﾀｲﾔ	2	[TJSF]
-	06007-81515		TIRE,28-9-15-12	ﾀｲﾔ	2	[TS F]
2	52436-82111		TUBE,28-9-15-12T	ﾁｭｰﾌﾞ	2	[TJ F][TJSF][TS F]
3	52436-82121		FLAP,28-9-15-12F	ﾌﾗｯﾌﾟ	2	[TJ F][TJSF][TS F]
A3	24454-40221		RIM-ASSY,700T-15	ﾘﾑｱｯｾﾝ	2	[TJ F][TJSF][TS F] INC.4,5
4	NO PART NO.	#	RIM & DISK	ﾘﾑ & ﾃﾞｨｽｸ	2	[TJ F][TJSF][TS F]
5	22439-44031		RING,SIDE	ﾘﾝｸﾞ	2	[TJ F][TJSF][TS F]

FIG.105 FRONT WHEEL [TSUF][TUJF][TUSF][TUWF][TUGF]

(F7034470) フロントホイール

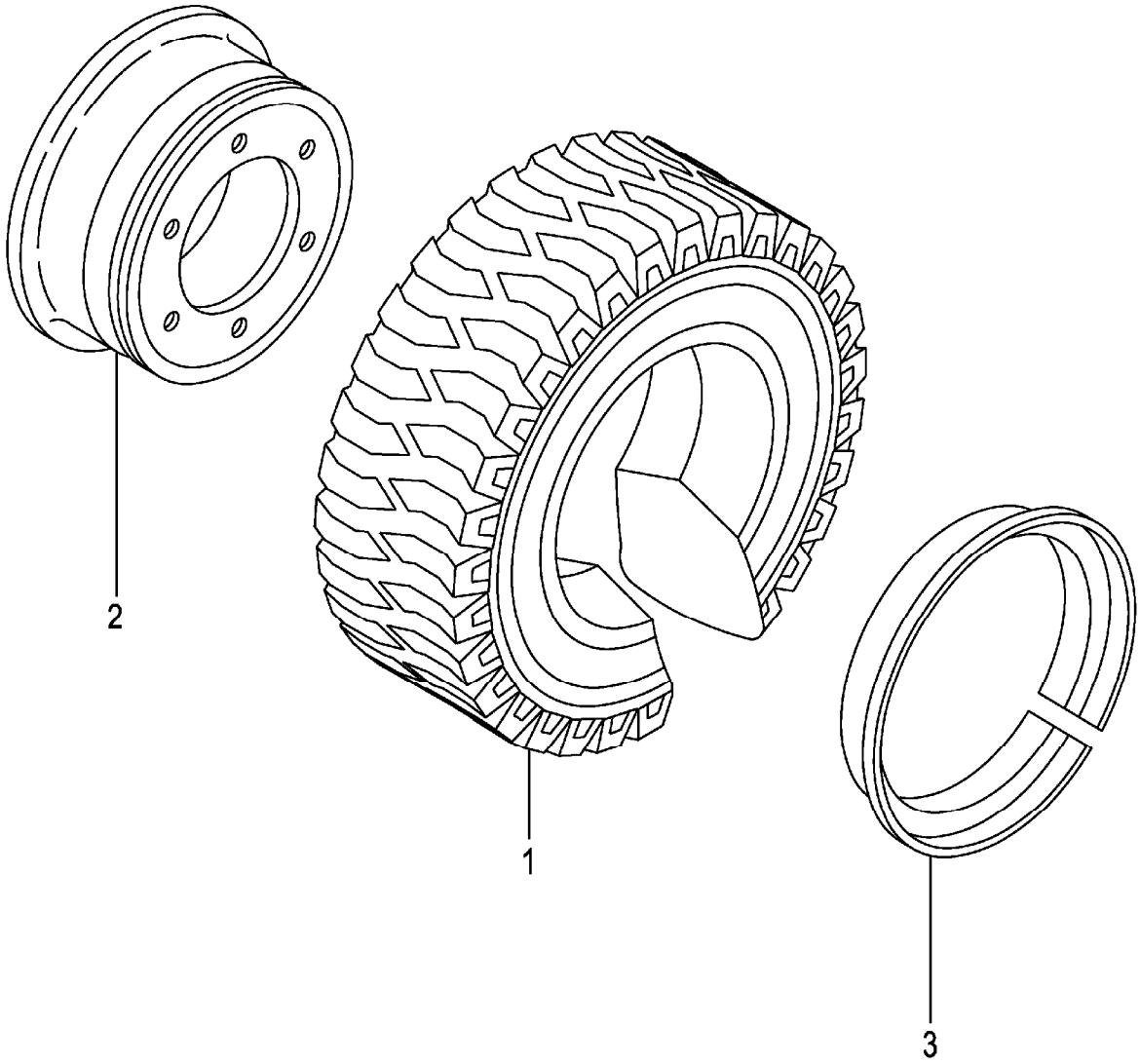

A:FG30C3 FG30T3 C:FD30C3 FD30T3
B:FG30W3 D:FD30W3

Item No	Part No.	Mark	Description		Req'd	Remarks : Serial No.
A1	539F6-80201		WHEEL-ASSY,FRONT	ﾌﾛﾝﾄﾎｲｰﾙｱｯｾﾝ	2	[TSUF] INC.1-3
-	534F7-40502		WHEEL-ASSY,FRONT	ﾌﾛﾝﾄﾎｲｰﾙｱｯｾﾝ	2	[TUJF] INC.1-3
-	534F7-40502		WHEEL-ASSY,FRONT	ﾌﾛﾝﾄﾎｲｰﾙｱｯｾﾝ	2	A,C [TUJF/EX] INC.1-3
-	534F6-80422		WHEEL-ASSY,FRONT	ﾌﾛﾝﾄﾎｲｰﾙｱｯｾﾝ	2	[TUSF] INC.1-3
-	534F6-80402		WHEEL-ASSY,FRONT	ﾌﾛﾝﾄﾎｲｰﾙｱｯｾﾝ	2	[TUWF] INC.1-3
-	534F6-80412		WHEEL-ASSY,FRONT	ﾌﾛﾝﾄﾎｲｰﾙｱｯｾﾝ	2	[TUGF] INC.1-3
1	06807-28915		TIRE,UNIQUE,28-9-15	ﾀｲﾔ	2	[TSUF]
-	06806-81515		TIRE,UNIQUE,28-9-15	ﾀｲﾔ	2	[TUJF]
-	06807-81515		TIRE,UNIQUE,28-9-15	ﾀｲﾔ	2	[TUJF]
-	06807-81515		TIRE,UNIQUE,28-9-15	ﾀｲﾔ	2	A,C [TUJF/EX]
-	522Q6-82021		TIRE,SOFTONE,28-9-15	ﾀｲﾔ	2	[TUSF]
-	522Q6-82001		TIRE,WHITE,28-9-15	ﾀｲﾔ	2	[TUWF]
-	522Q6-82011		TIRE,GREEN,28-9-15	ﾀｲﾔ	2	[TUGF]
A2	54456-82201		RIM-ASSY,700T-15	ﾘﾑｱｯｾﾝ	2	[TSUF][TUJF][TUSF][TUWF] [TUGF] INC.2,3
2	NO PART NO.	#	RIM & DISK	ﾘﾑ & ﾃﾞｨｽｸ	2	[TSUF][TUJF][TUSF][TUWF] [TUGF]
3	54456-82224		RING,SIDE	ﾘﾝｸﾞ	2	[TSUF][TUJF][TUSF][TUWF] [TUGF]

FIG.106 FRONT WHEEL [TRAF]

(F7034490) フロントホイール

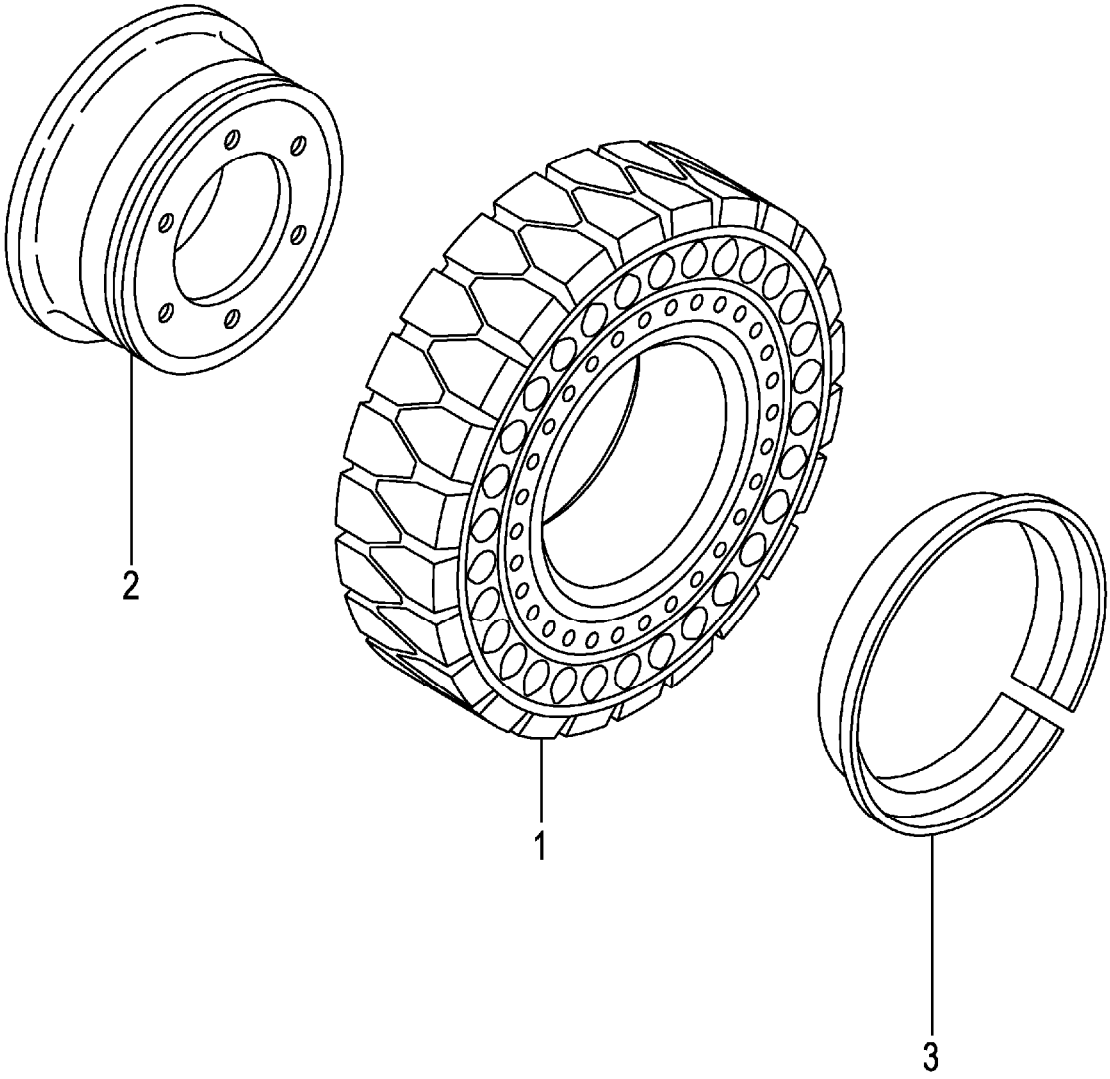

A:FG30C3 FG30T3 FG30W3
B:FD30C3 FD30T3 FD30W3

Item No	Part No.	Mark	Description		Req'd	Remarks : Serial No.
A1	534F6-80171		WHEEL-ASSY,FRONT	ﾌﾛﾝﾄﾎｲｰﾙｱｯｾﾝ	2	[TRAF] INC.1-3
1	534F6-85001		TIRE,AIR-BOSS,650-10	ﾀｲﾔ	2	[TRAF]
A2	54456-82201		RIM-ASSY,700T-15	ﾘﾑｱｯｾﾝ	2	[TRAF] INC.2,3
2	NO PART NO.	#	RIM & DISK	ﾘﾑ & ﾃﾞｨｽｸ	2	[TRAF]
3	54456-82224		RING,SIDE	ﾘﾝｸﾞ	2	[TRAF]

FIG.107 FRONT WHEEL [TUJSF]

(F70344A0) フロントホイール

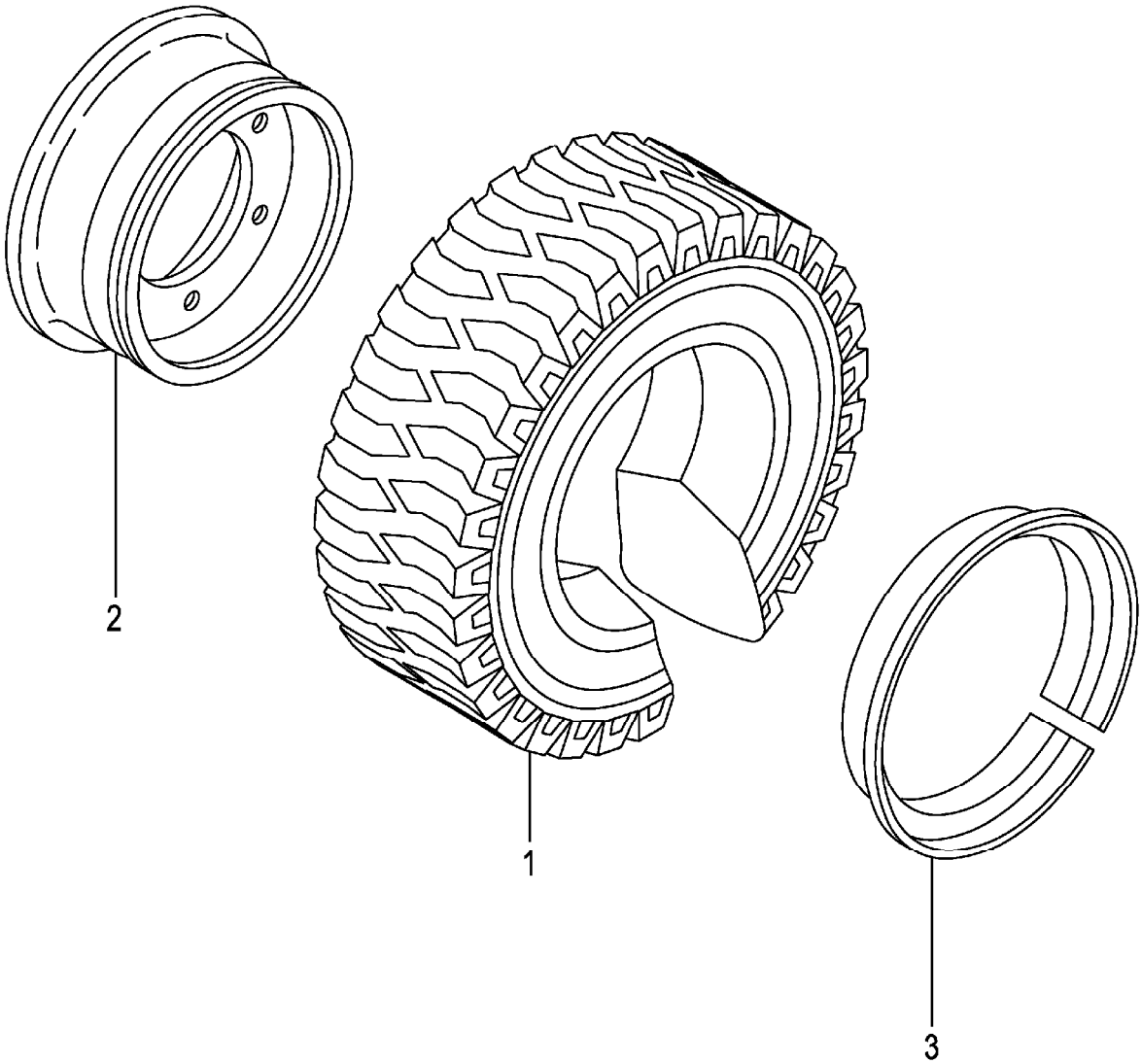

A:FG30C3 FG30T3 FG30W3
B:FD30C3 FD30T3 FD30W3

Item No	Part No.	Mark	Description		Req'd	Remarks : Serial No.
A1	534F6-83002		WHEEL-ASSY,FRONT	ﾌﾛﾝﾄﾎｲｰﾙｱｯｾﾝ	2	[TUJSF] INC.1-3
1	52436-82151		TIRE,UNIQUE,28-9-15	ﾀｲﾔ	2	[TUJSF]
A2	63056-56501		RIM-ASSY,700T-15	ﾘﾑｱｯｾﾝ	2	[TUJSF] INC.2,3
2	NO PART NO.	#	RIM & DISK	ﾘﾑ & ﾃﾞｨｽｸ	2	[TUJSF]
3	514T6-82021		RING,SIDE	ﾘﾝｸﾞ	2	[TUJSF]

FIG.108 FRONT WHEEL [TJ W][TJSW][TS W]

(F70344B0) フロントホイール

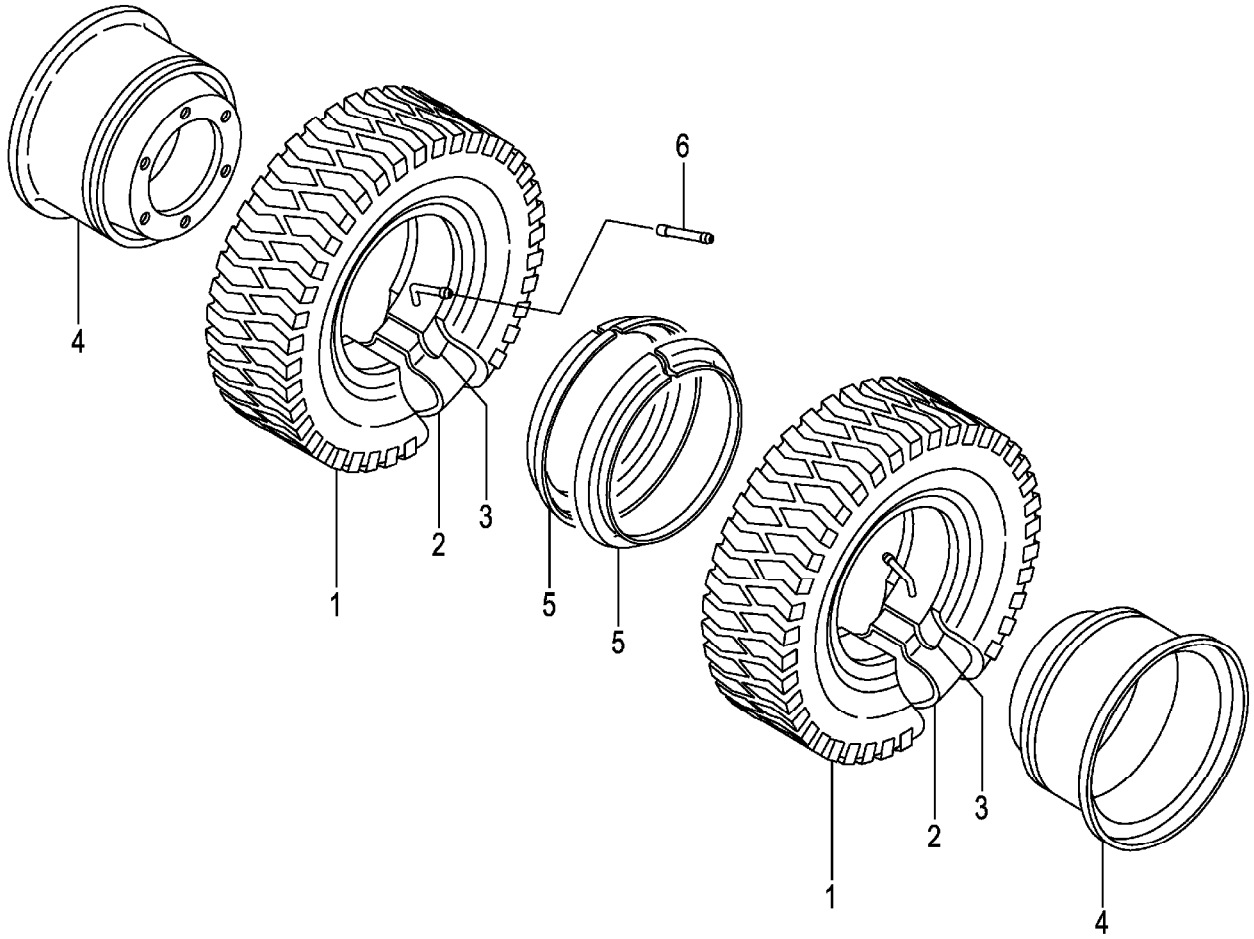

A:FG30C3 FG30T3 FG30W3
B:FD30C3 FD30T3 FD30W3

Item No	Part No.	Mark	Description		Req'd	Remarks : Serial No.
A1	54456-80421		WHEEL-ASSY,FRONT	ﾌﾛﾝﾄﾎｲｰﾙｱｯｾﾝ	4	[TJ W] INC.1-5
-	539F7-40501		WHEEL-ASSY,FRONT	ﾌﾛﾝﾄﾎｲｰﾙｱｯｾﾝ	4	[TJSW] INC.1-5
-	539F7-40701		WHEEL-ASSY,FRONT	ﾌﾛﾝﾄﾎｲｰﾙｱｯｾﾝ	4	[TS W] INC.1-5
1	06006-60015		TIRE,600-15-10	ﾀｲﾔ	4	[TJ W]
-	06005-60015		TIRE,600-15-10	ﾀｲﾔ	4	[TJSW]
-	06007-60015		TIRE,600-15-10	ﾀｲﾔ	4	[TS W]
2	06711-60015		TUBE,600-15-10T	ﾁｭｰﾌﾞ	4	[TJ W][TJSW][TS W]
3	06710-60015		FLAP,600-15-10F	ﾌﾗｯﾌﾟ	4	[TJ W][TJSW][TS W]
A2	53657-42053		RIM-ASSY,450E-15	ﾘﾑｱｯｾﾝ	4	[TJ W][TJSW][TS W] INC.4,5
4	NO PART NO.	#	RIM & DISK	ﾘﾑ & ﾃﾞｨｽｸ	4	[TJ W][TJSW][TS W]
5	53457-42151		RING,SIDE	ﾘﾝｸﾞ	4	[TJ W][TJSW][TS W]
6	06731-00120		TUBE,EXTENSION	ﾁｭｰﾌﾞ	2	[TJ W][TJSW][TS W]

FIG.109 FRONT WHEEL [TUJW][TUSW][TUWW][TUGW]

(F70344C0) フロントホイール

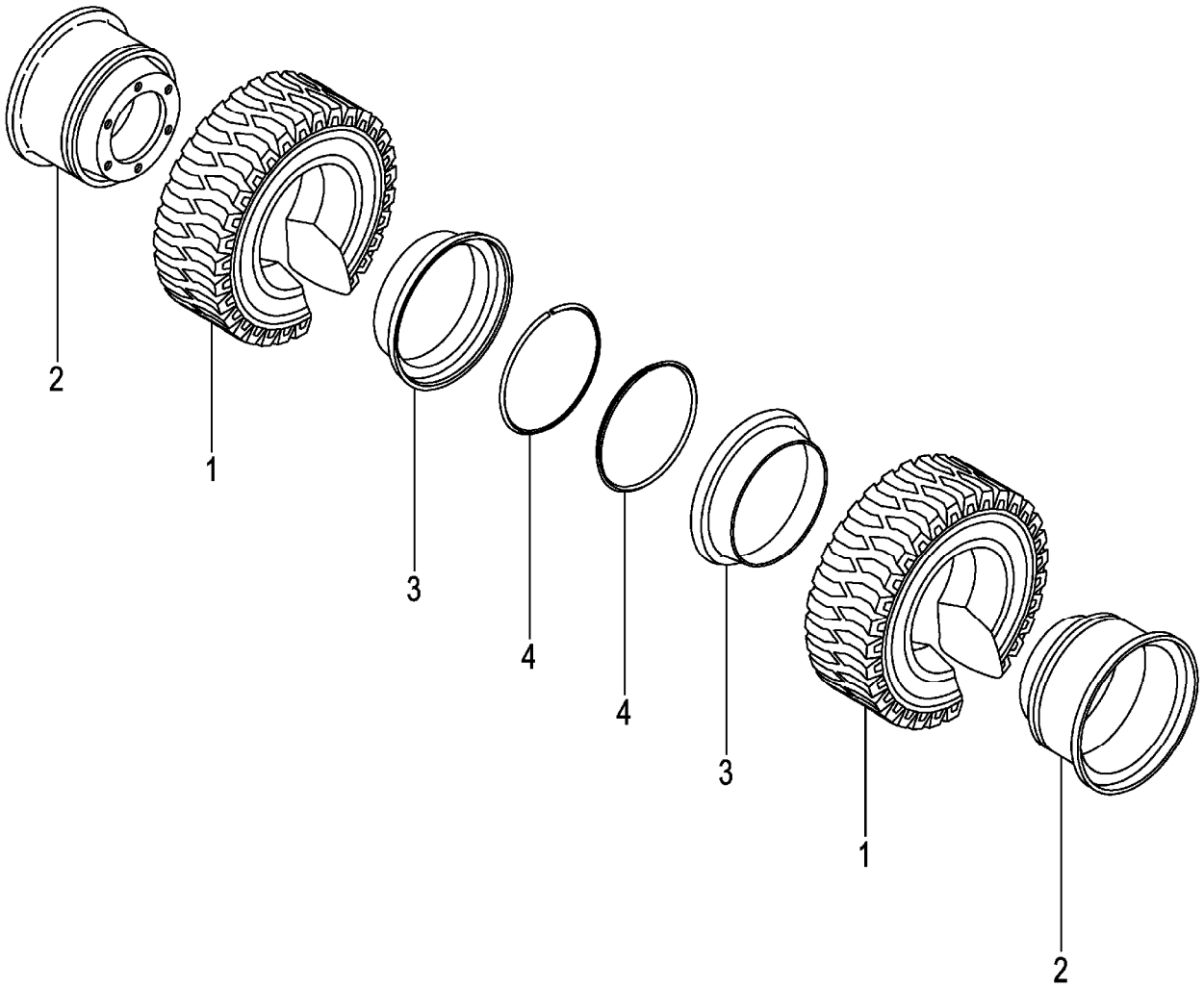

A:FG30C3 FG30T3 FG30W3
B:FD30C3 FD30T3 FD30W3

Item No	Part No.	Mark	Description		Req'd	Remarks : Serial No.
A1	54457-40201		WHEEL-ASSY,FRONT	ﾌﾛﾝﾄﾎｲｰﾙｱｯｾﾝ	4	[TUJW] INC.1-4
-	522Q6-80321		WHEEL-ASSY,FRONT	ﾌﾛﾝﾄﾎｲｰﾙｱｯｾﾝ	4	[TUSW] INC.1-4
-	522Q6-80301		WHEEL-ASSY,FRONT	ﾌﾛﾝﾄﾎｲｰﾙｱｯｾﾝ	4	[TUWW] INC.1-4
-	522Q6-80311		WHEEL-ASSY,FRONT	ﾌﾛﾝﾄﾎｲｰﾙｱｯｾﾝ	4	[TUGW] INC.1-4
1	06806-60015		TIRE,UNIQUE,600-15	ﾀｲﾔ	4	[TUJW]
-	06851-60015		TIRE,SOFTONE,600-15	ﾀｲﾔ	4	[TUSW]
-	06841-60015		TIRE,WHITE,600-15	ﾀｲﾔ	4	[TUWW]
-	06843-60015		TIRE,GREEN,600-15	ﾀｲﾔ	4	[TUGW]
A2	53656-82001		RIM-ASSY,450E-15	ﾘﾑｱｯｾﾝ	4	[TUJW][TUSW][TUWW][TUGW] INC.2-4
2	NO PART NO.	#	RIM	ﾘﾑ	4	[TUJW][TUSW][TUWW][TUGW]
3	53456-82052		RING,SIDE	ﾘﾝｸﾞ	4	[TUJW][TUSW][TUWW][TUGW]
4	53456-82062		RING,LOCK	ﾘﾝｸﾞ	4	[TUJW][TUSW][TUWW][TUGW]

FIG.110 FRONT WHEEL [TJ W28][TJSW28][TS W28]

(F70344D0) フロントホイール

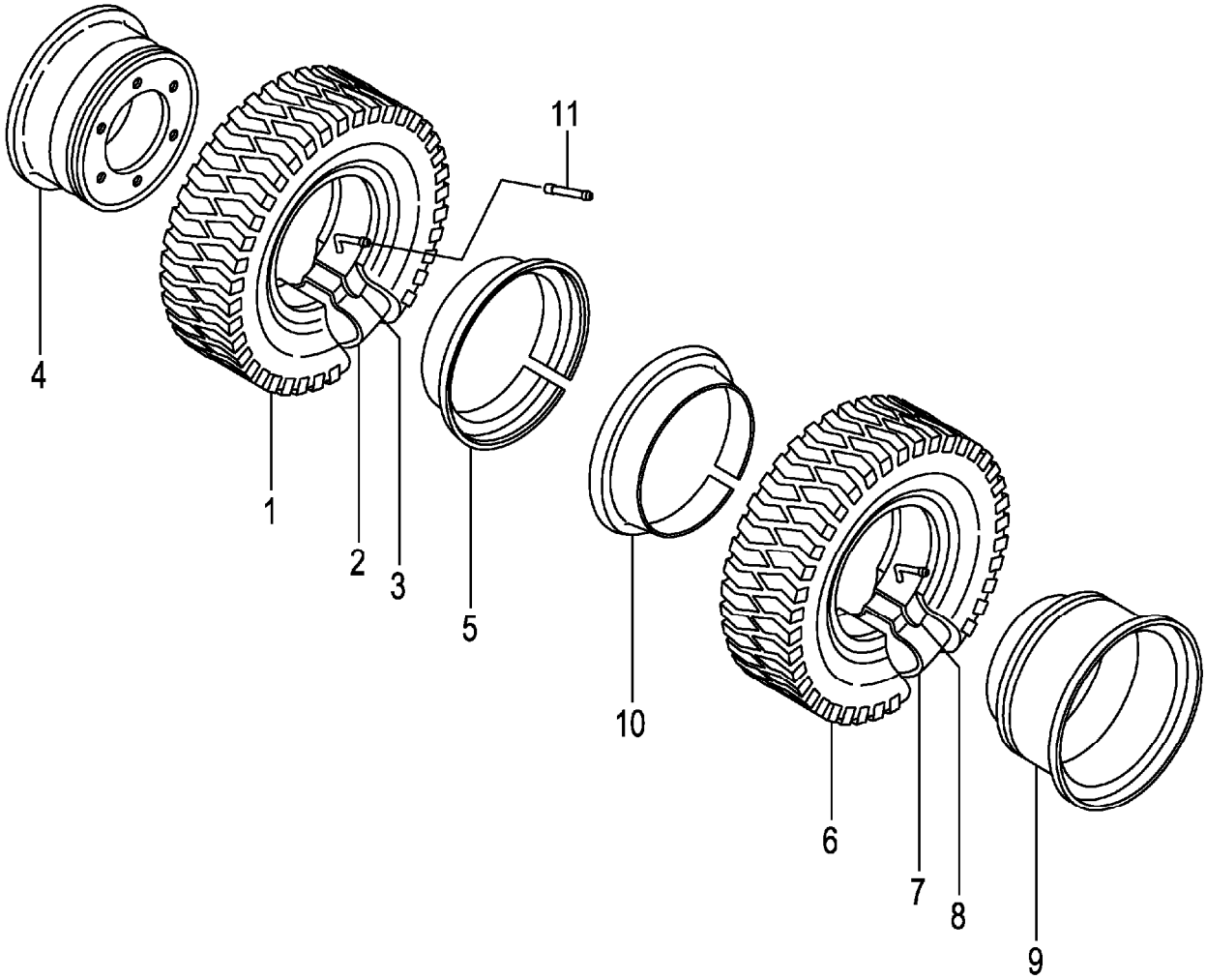

A:FG30C3 FG30T3 FG30W3
B:FD30C3 FD30T3 FD30W3

Item No	Part No.	Mark	Description		Req'd	Remarks : Serial No.
A1	24454-40201		WHEEL-ASSY,FRONT	ﾌﾛﾝﾄﾎｲｰﾙｱｯｾﾝ	2	[TJ W28] INC.1-5
-	539F7-40401		WHEEL-ASSY,FRONT	ﾌﾛﾝﾄﾎｲｰﾙｱｯｾﾝ	2	[TJSW28] INC.1-5
-	539F7-40601		WHEEL-ASSY,FRONT	ﾌﾛﾝﾄﾎｲｰﾙｱｯｾﾝ	2	[TS W28] INC.1-5
A2	24454-40211		TIRE-ASSY	ﾀｲﾔｱｯｾﾝ	2	[TJ W28] INC.1-3
1	52436-82101		TIRE,28-9-15-12	ﾀｲﾔ	2	[TJ W28]
-	06005-81515		TIRE,28-9-15-12	ﾀｲﾔ	2	[TJSW28]
-	06007-81515		TIRE,28-9-15-12	ﾀｲﾔ	2	[TS W28]
2	52436-82111		TUBE,28-9-15-12T	ﾁｭｰﾌﾞ	2	[TJ W28][TJSW28][TS W28]
3	52436-82121		FLAP,28-9-15-12F	ﾌﾗｯﾌﾟ	2	[TJ W28][TJSW28][TS W28]
A3	24454-40221		RIM-ASSY,700T-15	ﾘﾑｱｯｾﾝ	2	[TJ W28][TJSW28][TS W28] INC.4,5
4	NO PART NO.	#	RIM	ﾘﾑ	2	[TJ W28][TJSW28][TS W28]
5	22439-44031		RING,SIDE	ﾘﾝｸﾞ	2	[TJ W28][TJSW28][TS W28]
A4	54456-80201		WHEEL-ASSY,FRONT	ﾌﾛﾝﾄﾎｲｰﾙｱｯｾﾝ	2	[TJ W28] INC.6-10
-	539F7-40411		WHEEL-ASSY,FRONT	ﾌﾛﾝﾄﾎｲｰﾙｱｯｾﾝ	2	[TJSW28] INC.6-10
-	539F7-40611		WHEEL-ASSY,FRONT	ﾌﾛﾝﾄﾎｲｰﾙｱｯｾﾝ	2	[TS W28] INC.6-10
A5	24454-40211		TIRE-ASSY	ﾀｲﾔｱｯｾﾝ	2	[TJ W28] INC.6-8
6	52436-82101		TIRE,28-9-15-12	ﾀｲﾔ	2	[TJ W28]
-	06005-81515		TIRE,28-9-15-12	ﾀｲﾔ	2	[TJSW28]
-	06007-81515		TIRE,28-9-15-12	ﾀｲﾔ	2	[TS W28]
7	52436-82111		TUBE,28-9-15-12T	ﾁｭｰﾌﾞ	2	[TJ W28][TJSW28][TS W28]
8	52436-82121		FLAP,28-9-15-12F	ﾌﾗｯﾌﾟ	2	[TJ W28][TJSW28][TS W28]
A6	54456-80211		RIM-ASSY,700T-15	ﾘﾑｱｯｾﾝ	2	[TJ W28][TJSW28][TS W28] INC.9,10
9	NO PART NO.	#	RIM	ﾘﾑ	2	[TJ W28][TJSW28][TS W28]
10	22439-44031		RING,SIDE	ﾘﾝｸﾞ	2	[TJ W28][TJSW28][TS W28]
11	06731-00120		TUBE,EXTENSION	ﾁｭｰﾌﾞ	2	[TJ W28][TJSW28][TS W28]

FIG.111 REAR WHEEL

(F70344F0) リヤーホイール

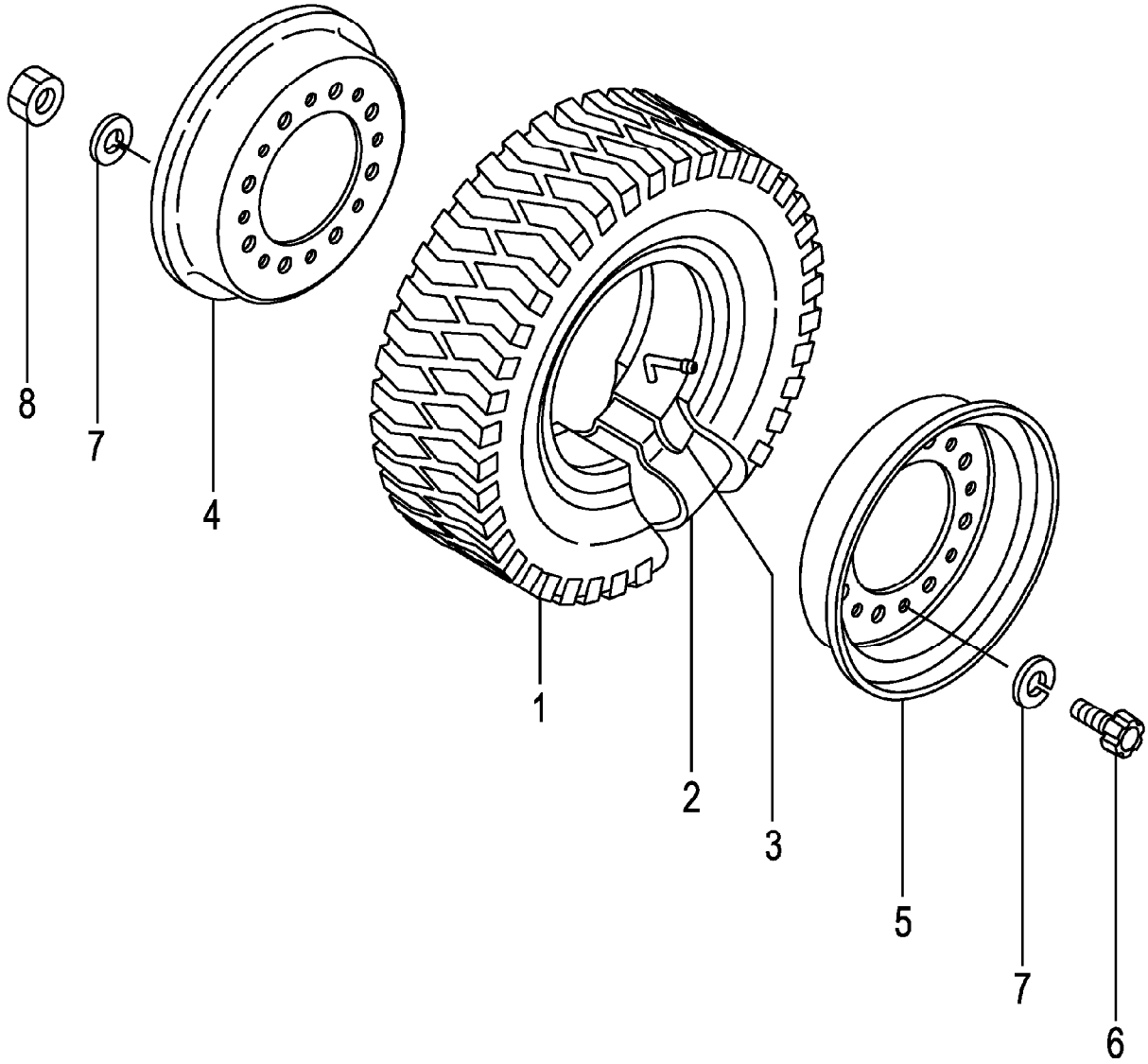

A:FG30C3 FG30T3 FG30W3
B:FD30C3 FD30T3 FD30W3

Item No	Part No.	Mark	Description		Req'd	Remarks : Serial No.
A1	234F4-40302		WHEEL-ASSY,REAR	ﾘﾔｰﾎｲｰﾙｱｯｾﾝ	2	INC.1-8
1	06006-65010		TIRE,650-10-10	ﾀｲﾔ	2	
2	06711-65010		TUBE,650-10-10T	ﾁｭｰﾌﾞ	2	
3	06701-65010		FLAP,650-10-10F	ﾌﾗｯﾌﾟ	2	
A2	52356-80302		RIM-ASSY,500F-10	ﾘﾑｱｯｾﾝ	2	INC.4-8
4	NO PART NO.	#	RIM,INSIDE	ﾘﾑ	2	
5	NO PART NO.	#	RIM,OUTSIDE	ﾘﾑ	2	
6	534F3-82001		BOLT	ﾎﾞﾙﾄ	16	
7	02011-00012		WASHER	ﾜｯｼｬ	32	
8	01400-00012		NUT	ﾅｯﾄ	16	

FIG.112 REAR WHEEL [DR R]

(F70344G0) リヤーホイール

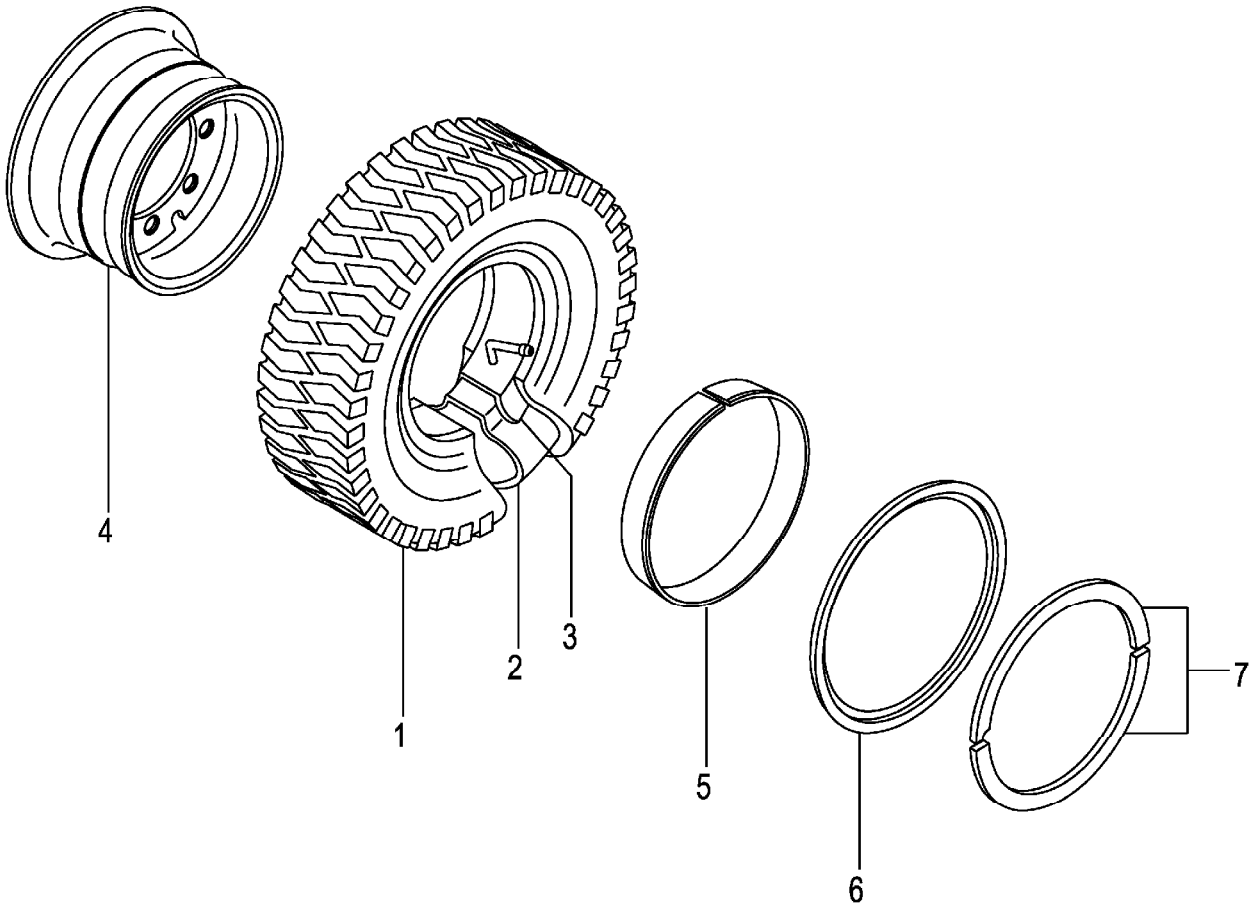

A:FG30C3 FG30T3 FG30W3
B:FD30C3 FD30T3 FD30W3

Item No	Part No.	Mark	Description		Req'd	Remarks : Serial No.
A1	514J6-82201		WHEEL-ASSY,REAR	ﾘﾔｰﾎｲｰﾙｱｯｾﾝ	2	[DR R] INC.1-7
1	06006-65010		TIRE,650-10-10	ﾀｲﾔ	2	[DR R]
2	06711-65010		TUBE,650-10-10T	ﾁｭｰﾌﾞ	2	[DR R]
3	06701-65010		FLAP,650-10-10F	ﾌﾗｯﾌﾟ	2	[DR R]
A2	514J6-82211		RIM-ASSY,500F-10	ﾘﾑｱｯｾﾝ	2	[DR R] INC.4-7
4	NO PART NO.	#	RIM	ﾘﾑ	2	[DR R]
5	54236-83011		BAND	ﾊﾞﾝﾄﾞ	2	[DR R]
6	54236-83021		FLANGE,SIDE	ﾌﾗﾝｼﾞ	2	[DR R]
7	54236-83031		RING,LOCK	ﾘﾝｸﾞ	2	[DR R]

FIG.113 REAR WHEEL [TJ R][TJSR][TS R]

(F70344H0) リヤーホイール

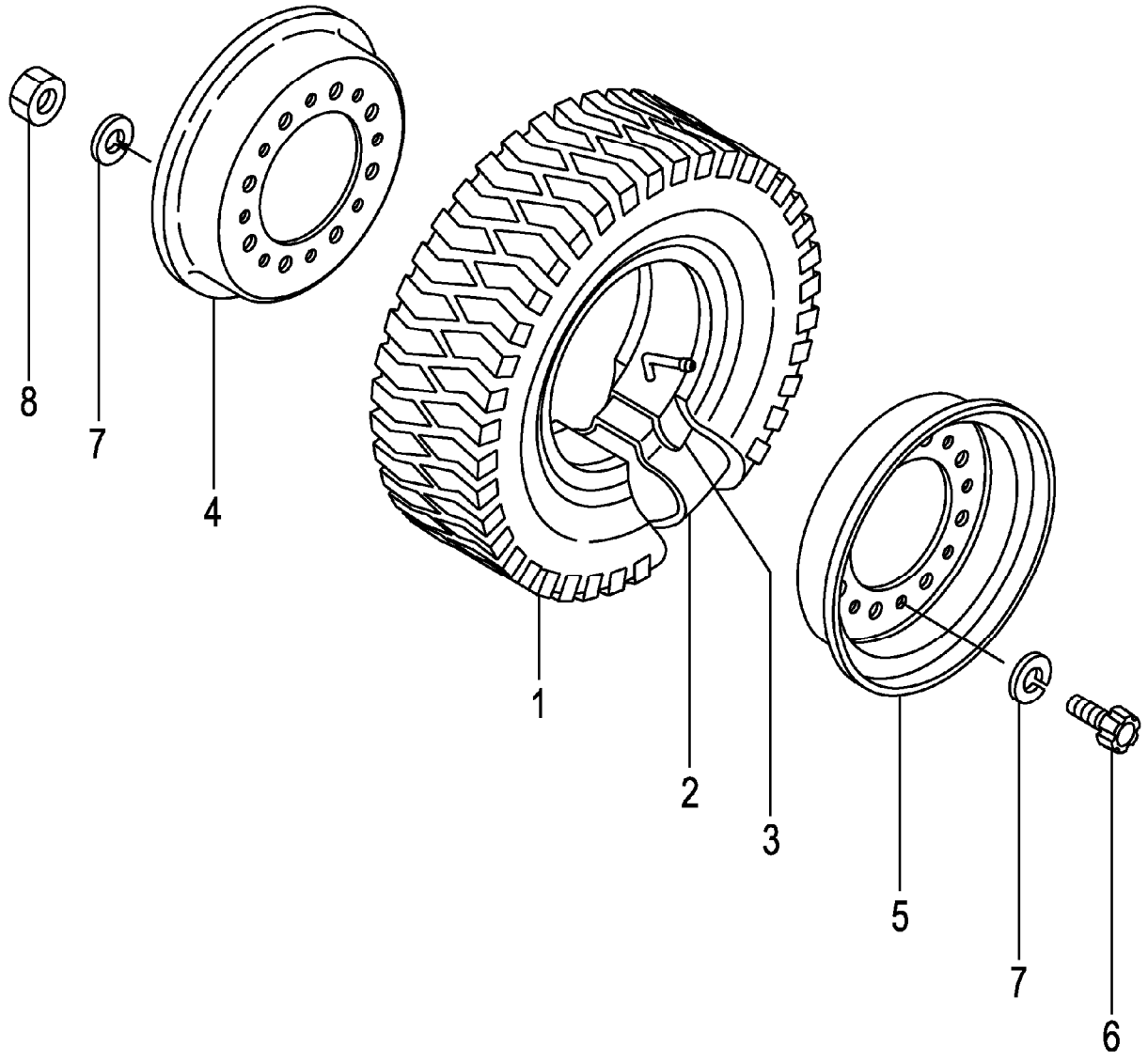

A:FG30C3 FG30T3 FG30W3
B:FD30C3 FD30T3 FD30W3

Item No	Part No.	Mark	Description		Req'd	Remarks : Serial No.
A1	234F4-40302		WHEEL-ASSY,REAR	ﾘﾔｰﾎｲｰﾙｱｯｾﾝ	2	[TJ R] INC.1-8
-	539F7-40511		WHEEL-ASSY,REAR	ﾘﾔｰﾎｲｰﾙｱｯｾﾝ	2	[TJSR] INC.1-8
-	539F7-40711		WHEEL-ASSY,REAR	ﾘﾔｰﾎｲｰﾙｱｯｾﾝ	2	[TS R] INC.1-8
1	06006-65010		TIRE,650-10-10	ﾀｲﾔ	2	[TJ R]
-	06005-65010		TIRE,650-10-10	ﾀｲﾔ	2	[TJSR]
-	06007-65010		TIRE,650-10-10	ﾀｲﾔ	2	[TS R]
2	06711-65010		TUBE,650-10-10T	ﾁｭｰﾌﾞ	2	[TJ R][TJSR][TS R]
3	06701-65010		FLAP,650-10-10F	ﾌﾗｯﾌﾟ	2	[TJ R][TJSR][TS R]
A2	52356-80302		RIM-ASSY,500F-10	ﾘﾑｱｯｾﾝ	2	[TJ R][TJSR][TS R] INC.4-8
4	NO PART NO.	#	RIM,INSIDE	ﾘﾑ	2	[TJ R][TJSR][TS R]
5	NO PART NO.	#	RIM,OUTSIDE	ﾘﾑ	2	[TJ R][TJSR][TS R]
6	534F3-82001		BOLT	ﾎﾞﾙﾄ	16	[TJ R][TJSR][TS R]
7	02011-00012		WASHER	ﾜｯｼｬ	32	[TJ R][TJSR][TS R]
8	01400-00012		NUT	ﾅｯﾄ	16	[TJ R][TJSR][TS R]

FIG.114 REAR WHEEL [(TJ R,TJSR,TS R)/DR R]

(F70344J0) リヤーホイール

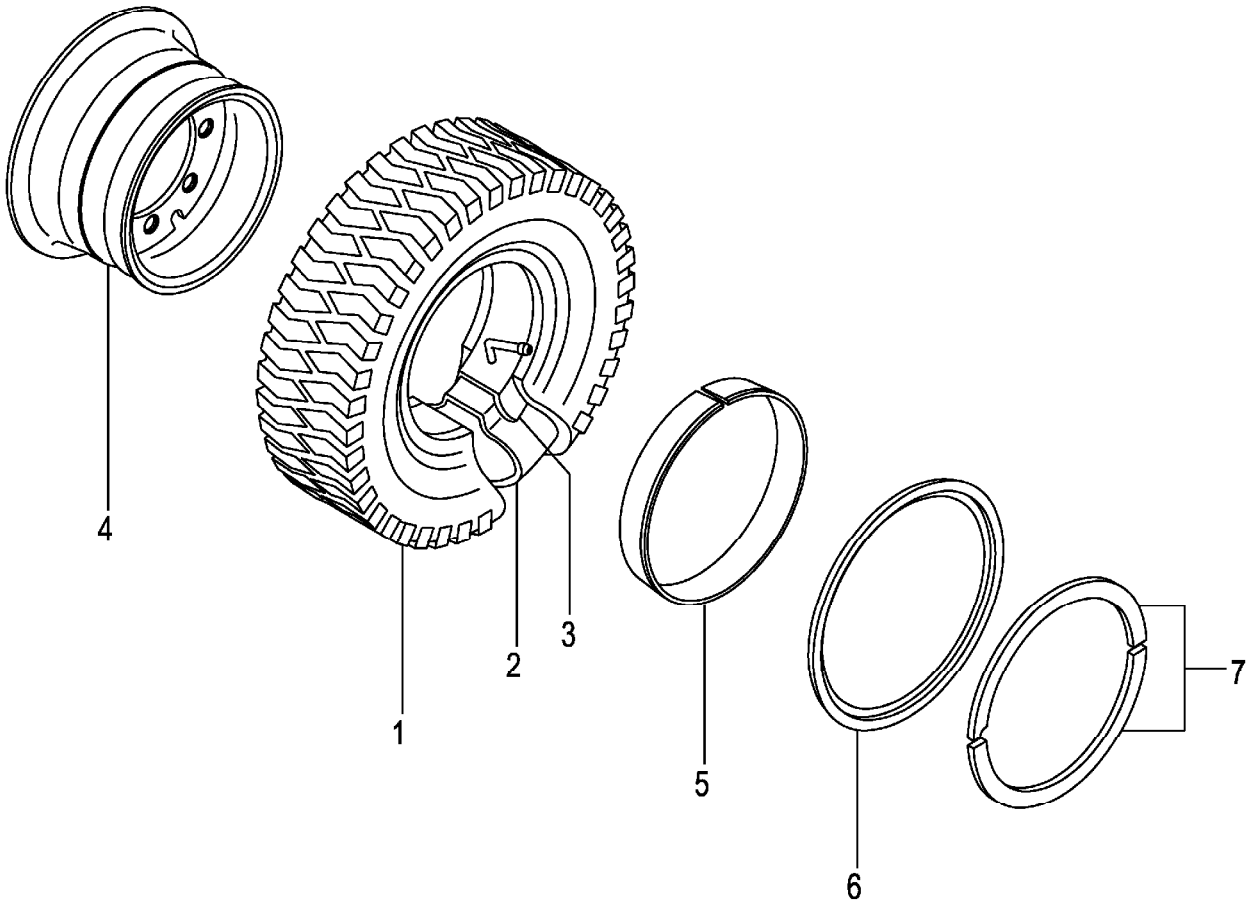

A:FG30C3 FG30T3 FG30W3
B:FD30C3 FD30T3 FD30W3

Item No	Part No.	Mark	Description		Req'd	Remarks : Serial No.
A1	514J6-82201		WHEEL-ASSY,REAR	ﾘﾔｰﾎｲｰﾙｱｯｾﾝ	2	[TJ R/DR R] INC.1-7
-	539F7-40521		WHEEL-ASSY,REAR	ﾘﾔｰﾎｲｰﾙｱｯｾﾝ	2	[TJSR/DR R] INC.1-7
-	539F7-40721		WHEEL-ASSY,REAR	ﾘﾔｰﾎｲｰﾙｱｯｾﾝ	2	[TS R/DR R] INC.1-7
1	06006-65010		TIRE,650-10-10	ﾀｲﾔ	2	[TJ R/DR R]
-	06005-65010		TIRE,650-10-10	ﾀｲﾔ	2	[TJSR/DR R]
-	06007-65010		TIRE,650-10-10	ﾀｲﾔ	2	[TS R/DR R]
2	06711-65010		TUBE,650-10-10T	ﾁｭｰﾌﾞ	2	[TJ R/DR R][TJSR/DR R] [TS R/DR R]
3	06701-65010		FLAP,650-10-10F	ﾌﾗｯﾌﾟ	2	[TJ R/DR R][TJSR/DR R] [TS R/DR R]
A2	514J6-82211		RIM-ASSY,500F-10	ﾘﾑｱｯｾﾝ	2	[TJ R/DR R][TJSR/DR R] [TS R/DR R] INC.4-7
4	NO PART NO.	#	RIM	ﾘﾑ	2	[TJ R/DR R][TJSR/DR R] [TS R/DR R]
5	54236-83011		BAND	ﾊﾞﾝﾄﾞ	2	[TJ R/DR R][TJSR/DR R] [TS R/DR R]
6	54236-83021		FLANGE,SIDE	ﾌﾗﾝｼﾞ	2	[TJ R/DR R][TJSR/DR R] [TS R/DR R]
7	54236-83031		RING,LOCK	ﾘﾝｸﾞ	2	[TJ R/DR R][TJSR/DR R] [TS R/DR R]

FIG.115 REAR WHEEL [TSUR][TUJR][TUSR][TUWR][TUGR]

(F70344K0) リヤーホイール

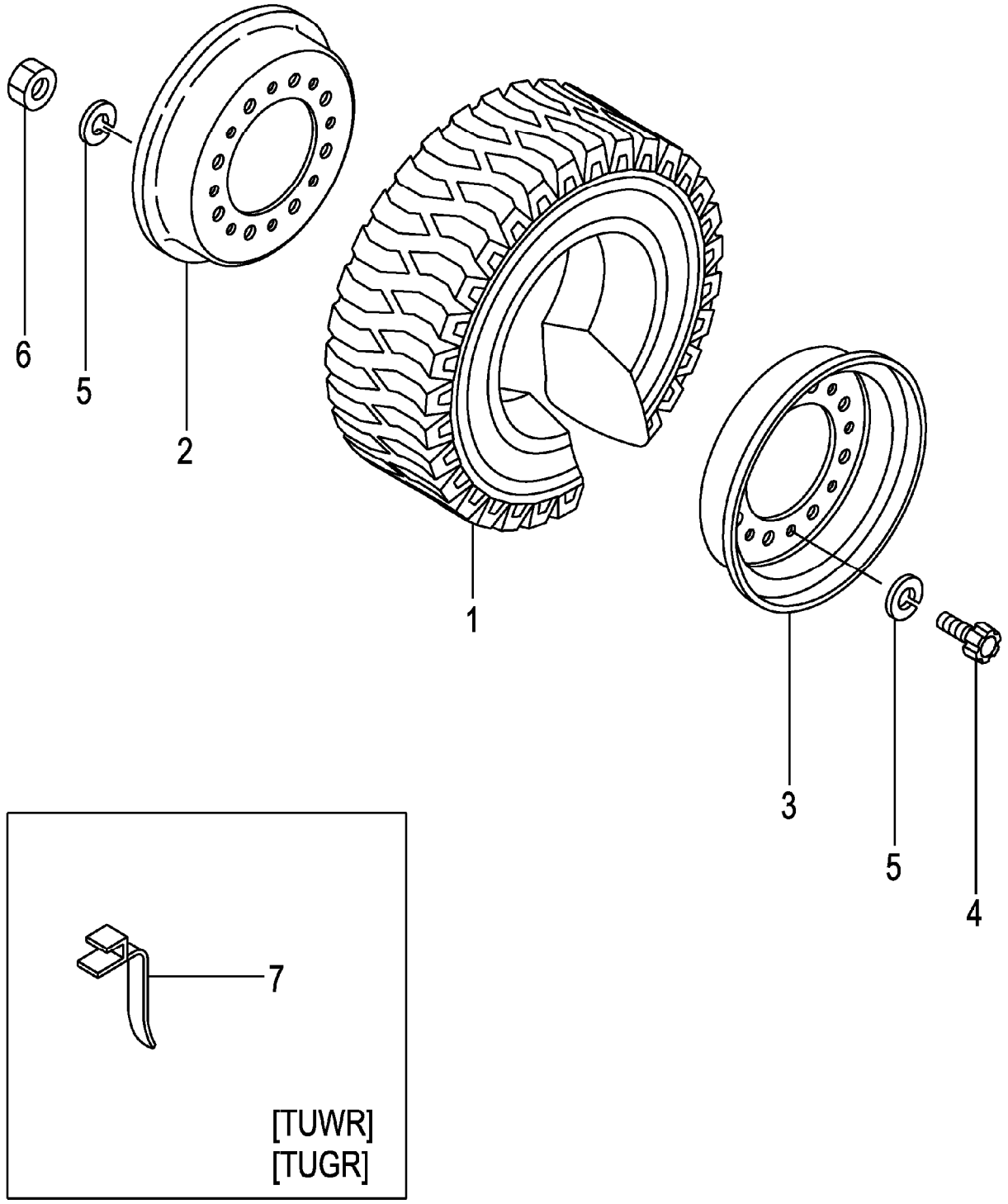

A:FG30C3 FG30T3 C:FD30C3 FD30T3
B:FG30W3 D:FD30W3

Item No	Part No.	Mark	Description		Req'd	Remarks : Serial No.
A1	539F6-80301		WHEEL-ASSY,REAR	ﾘﾔｰﾎｲｰﾙｱｯｾﾝ	2	[TSUR] INC.1-6
-	52436-80701		WHEEL-ASSY,REAR	ﾘﾔｰﾎｲｰﾙｱｯｾﾝ	2	[TUJR] INC.1-6
-	52436-80701		WHEEL-ASSY,REAR	ﾘﾔｰﾎｲｰﾙｱｯｾﾝ	2	A,C [TUJR/EX] INC.1-6
-	522Q6-80422		WHEEL-ASSY,REAR	ﾘﾔｰﾎｲｰﾙｱｯｾﾝ	2	[TUSR] INC.1-6
-	522Q6-80402		WHEEL-ASSY,REAR	ﾘﾔｰﾎｲｰﾙｱｯｾﾝ	2	[TUWR] INC.1-6
-	522Q6-80412		WHEEL-ASSY,REAR	ﾘﾔｰﾎｲｰﾙｱｯｾﾝ	2	[TUGR] INC.1-6
1	06807-65010		TIRE,UNIQUE,650-10	ﾀｲﾔ	2	[TSUR]
-	06806-65010		TIRE,UNIQUE,650-10	ﾀｲﾔ	2	[TUJR]
-	06807-65010		TIRE,UNIQUE,650-10	ﾀｲﾔ	2	[TUJR]
-	06807-65010		TIRE,UNIQUE,650-10	ﾀｲﾔ	2	A,C [TUJR/EX]
-	06853-65010		TIRE,SOFTONE,650-10	ﾀｲﾔ	2	[TUSR]
-	06841-65010		TIRE,WHITE,650-10	ﾀｲﾔ	2	[TUWR]
-	06843-65010		TIRE,GREEN,650-10	ﾀｲﾔ	2	[TUGR]
A2	52356-80302		RIM-ASSY,500F-10	ﾘﾑｱｯｾﾝ	2	[TSUR][TUJR][TUSR][TUWR] [TUGR] INC.2-6
2	NO PART NO.	#	RIM,INSIDE	ﾘﾑ	2	[TSUR][TUJR][TUSR][TUWR] [TUGR]
3	NO PART NO.	#	RIM,OUTSIDE	ﾘﾑ	2	[TSUR][TUJR][TUSR][TUWR] [TUGR]
4	534F3-82001		BOLT	ﾎﾞﾙﾄ	16	[TSUR][TUJR][TUSR][TUWR] [TUGR]
5	02011-00012		WASHER	ﾜｯｼｬ	32	[TSUR][TUJR][TUSR][TUWR] [TUGR]
6	01400-00012		NUT	ﾅｯﾄ	16	[TSUR][TUJR][TUSR][TUWR] [TUGR]
7	571A6-82081		BELT,EARTH	ﾍﾞﾙﾄ	1	[TUWR][TUGR]

FIG.116 REAR WHEEL [TUJR/DR R]

(F70344L0) リヤーホイール

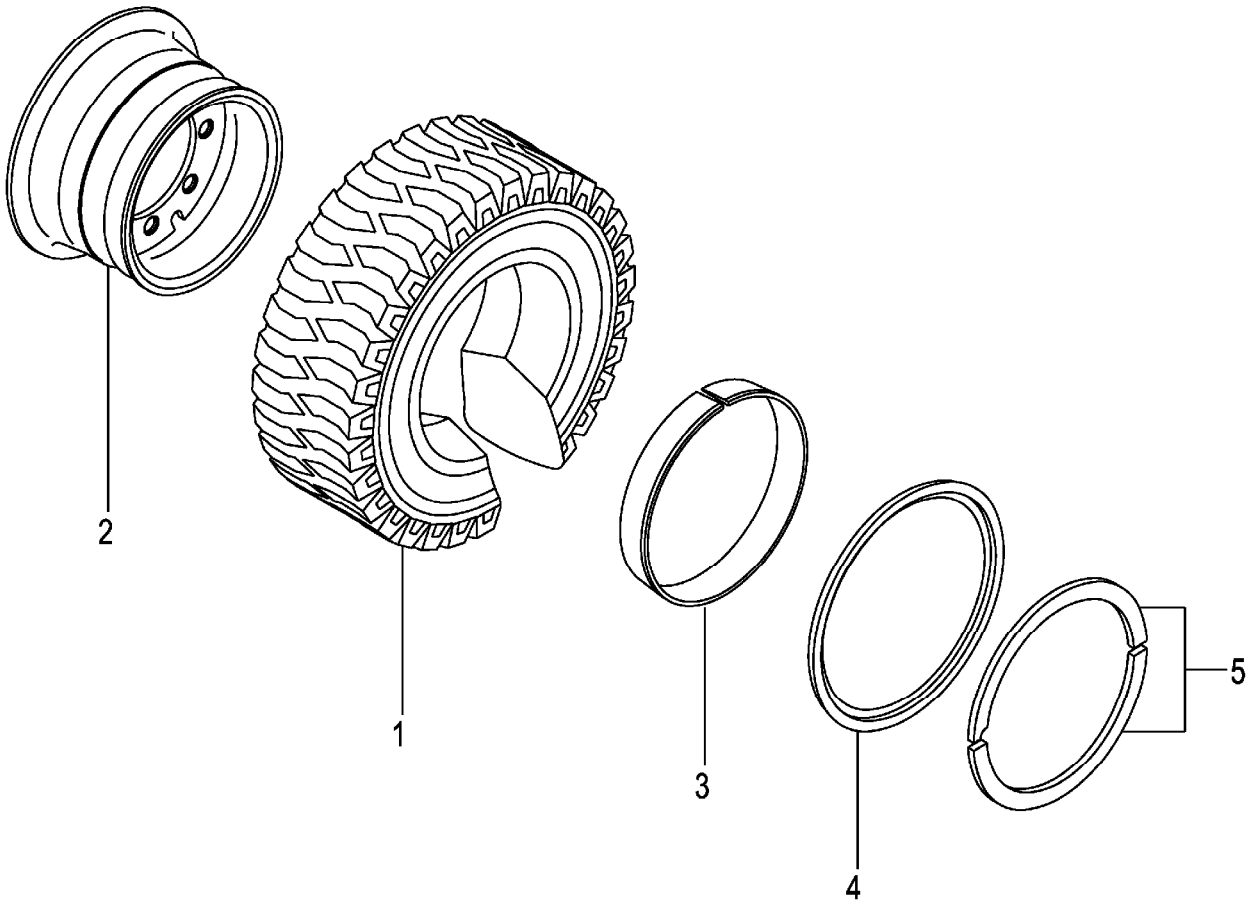

A:FG30C3 FG30T3 FG30W3
B:FD30C3 FD30T3 FD30W3

Item No	Part No.	Mark	Description		Req'd	Remarks : Serial No.
A1	514J6-82231		WHEEL-ASSY,REAR	ﾘﾔｰﾎｲｰﾙｱｯｾﾝ	2	[TUJR/DR R] INC.1-5
1	06806-65010		TIRE,UNIQUE,650-10	ﾀｲﾔ	2	[TUJR/DR R]
A2	514J6-82211		RIM-ASSY,500F-10	ﾘﾑｱｯｾﾝ	2	[TUJR/DR R] INC.2-5
2	NO PART NO.	#	RIM	ﾘﾑ	2	[TUJR/DR R]
3	54236-83011		BAND	ﾊﾞﾝﾄﾞ	2	[TUJR/DR R]
4	54236-83021		FLANGE,SIDE	ﾌﾗﾝｼﾞ	2	[TUJR/DR R]
5	54236-83031		RING,LOCK	ﾘﾝｸﾞ	2	[TUJR/DR R]

FIG.117 REAR WHEEL [TRAR]

(F70344M0) リヤーホイール

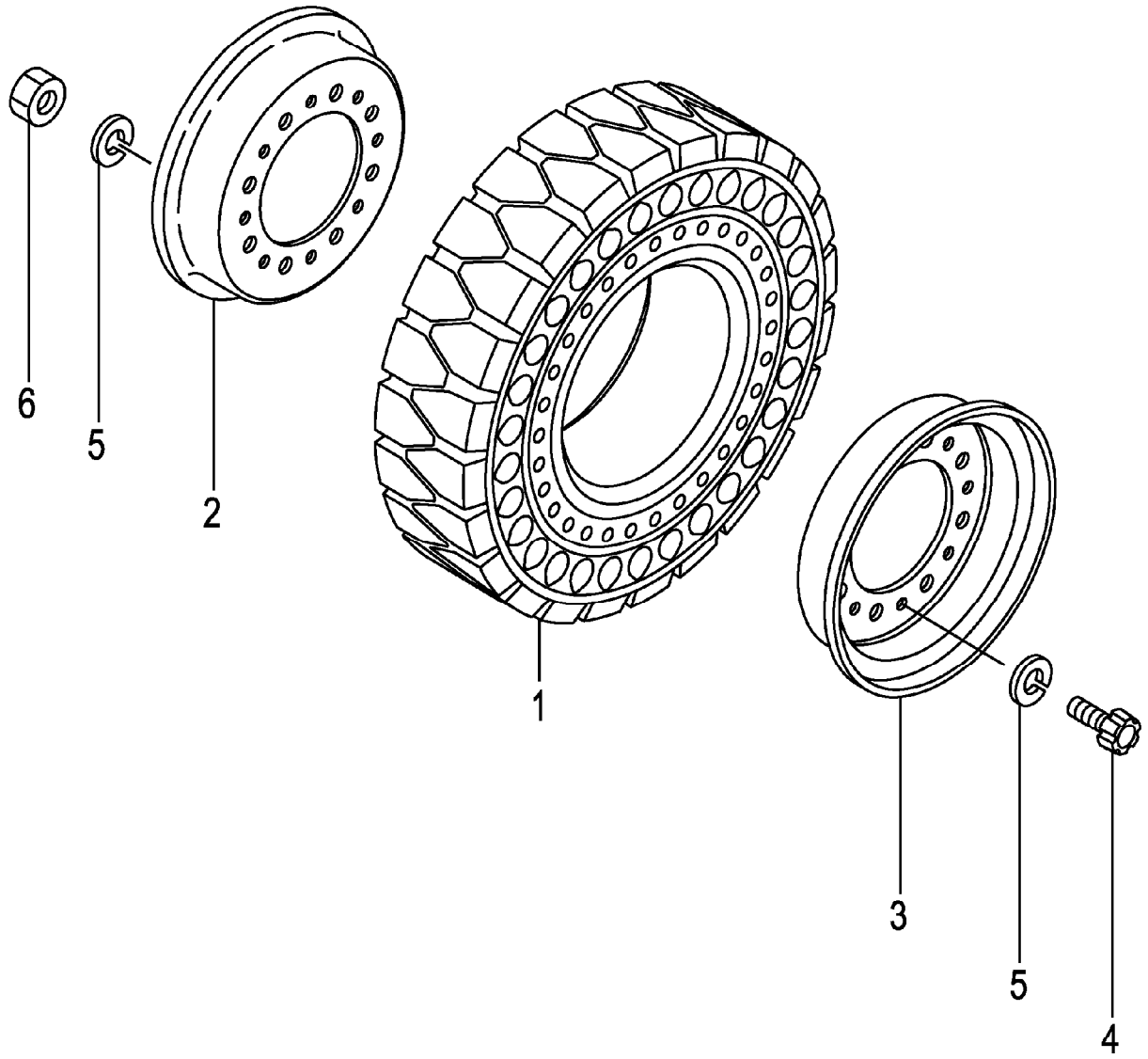

A:FG30C3 FG30T3 FG30W3
B:FD30C3 FD30T3 FD30W3

Item No	Part No.	Mark	Description		Req'd	Remarks : Serial No.
A1	534F6-80271		WHEEL-ASSY,REAR	ﾘﾔｰﾎｲｰﾙｱｯｾﾝ	2	[TRAR] INC.1-6
1	516G6-85011		TIRE,AIR-BOSS,650-10	ﾀｲﾔ	2	[TRAR]
A2	52356-80302		RIM-ASSY,500F-10	ﾘﾑｱｯｾﾝ	2	[TRAR] INC.2-6
2	NO PART NO.	#	RIM,INSIDE	ﾘﾑ	2	[TRAR]
3	NO PART NO.	#	RIM,OUTSIDE	ﾘﾑ	2	[TRAR]
4	534F3-82001		BOLT	ﾎﾞﾙﾄ	16	[TRAR]
5	02011-00012		WASHER	ﾜｯｼｬ	32	[TRAR]
6	01400-00012		NUT	ﾅｯﾄ	16	[TRAR]

FIG.118 POWER CYLINDER

(F7034510) ﾊﾟﾜｰｼﾘﾝﾀﾞ

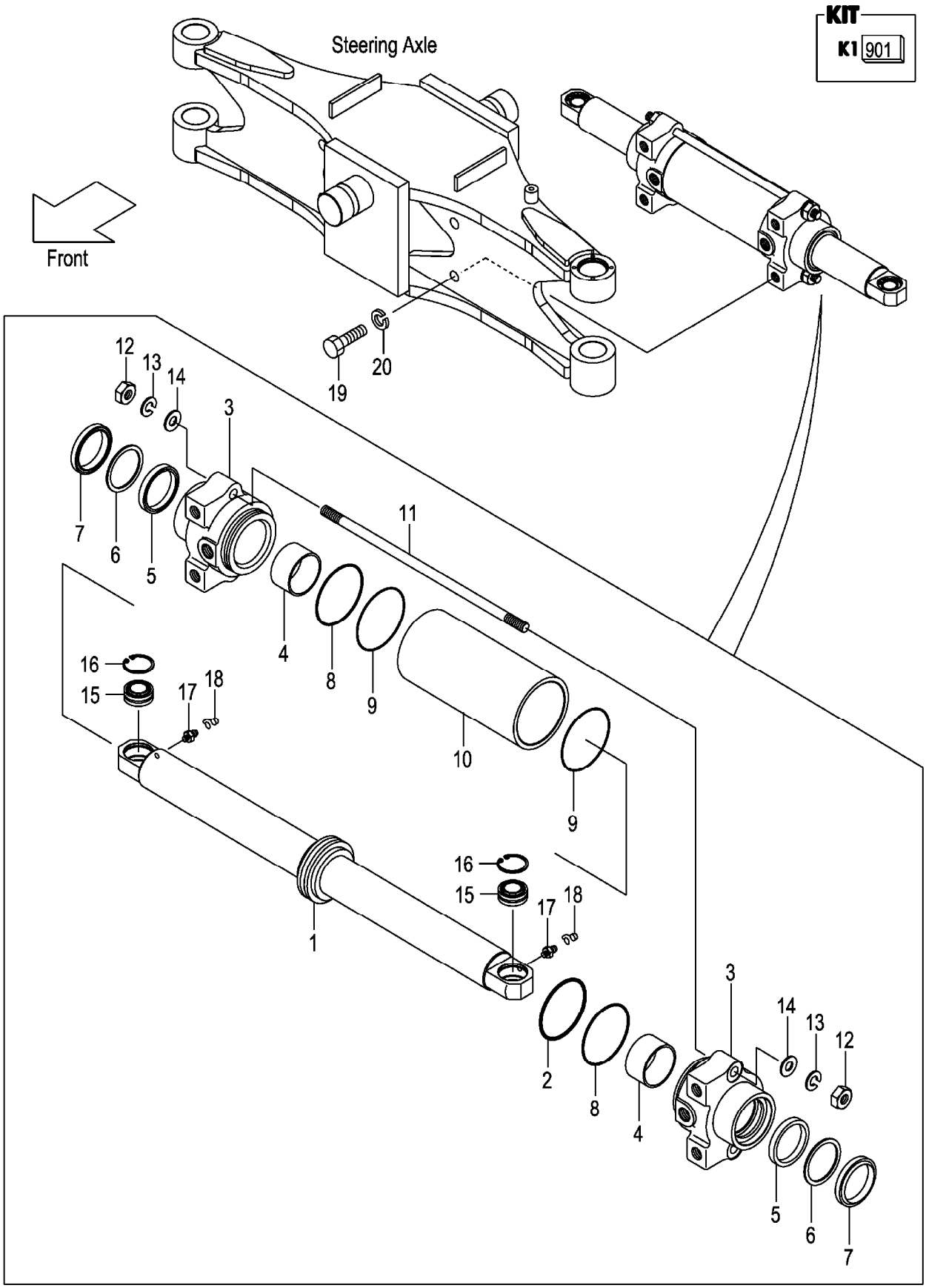

A:FG30C3 FG30T3 FG30W3
B:FD30C3 FD30T3 FD30W3

Item No	Part No.	Mark	Description		Req'd	Remarks : Serial No.
A1	22N54-50201		CYL-ASSY,PS	ﾊﾟﾜｽﾃｼﾘﾝﾀﾞｱｯｾﾝ	1	INC.1-18
901	22N54-59801	K1	KIT,OVERHAUL	ｵｰﾊﾞﾎｰﾙｷｯﾄ	1	INC.2,5-9
A2	22N54-50221		ROD-ASSY,PISTON	ﾋﾟｽﾄﾝﾛｯﾄﾞｱｯｾﾝ	1	INC.1,2
1	22N54-52001		ROD,PISTON	ﾛｯﾄﾞ	1	
2	514A2-42201	*	SEAL	ｼｰﾙ	1	
3	22N54-52101		CAP,CYL	ｷｬｯﾌﾟ	2	
4	22N54-52121		BUSHING,DU	ﾌﾞｯｼﾝｸﾞ	2	A:1-124
						B:1-225
-	23460-53171		BUSHING,DU	ﾌﾞｯｼﾝｸﾞ	2	A:125-
						B:226-
5	97103-35431	*	PACKING	ﾊﾟｯｷﾝｸﾞ	2	
6	22658-52301	*	RING,BACK-UP	ﾘﾝｸﾞ	2	
7	22N54-52141	*	SEAL,DUST	ｼｰﾙ	2	
8	03350-00750	*	O-RING	Oﾘﾝｸﾞ	2	
9	22N54-52151	*	O-RING	Oﾘﾝｸﾞ	2	
10	22N54-52201		TUBE,CYL	ﾁｭｰﾌﾞ	1	
11	22N54-52251		BOLT	ﾎﾞﾙﾄ	2	
12	01400-00012		NUT	ﾅｯﾄ	4	
13	02010-00012		WASHER	ﾜｯｼｬ	4	
14	02000-00012		WASHER	ﾜｯｼｬ	4	
15	215E4-52231		JOINT,SPHERE-FACE	ｼﾞｮｲﾝﾄ	2	
16	02110-00035		RING,SNAP	ｽﾅｯﾌﾟﾘﾝｸﾞ	2	
17	214A8-52051		NIPPLE,GREASE	ﾆｯﾌﾟﾙ	2	
18	22199-12401		CAP,NIPPLE	ｷｬｯﾌﾟ	2	
19	01100-16040		BOLT	ﾎﾞﾙﾄ	4	
20	02010-00016		WASHER	ﾜｯｼｬ	4	

FIG.119 OVERHEAD GUARD

(F7035110) オーバヘッドガード

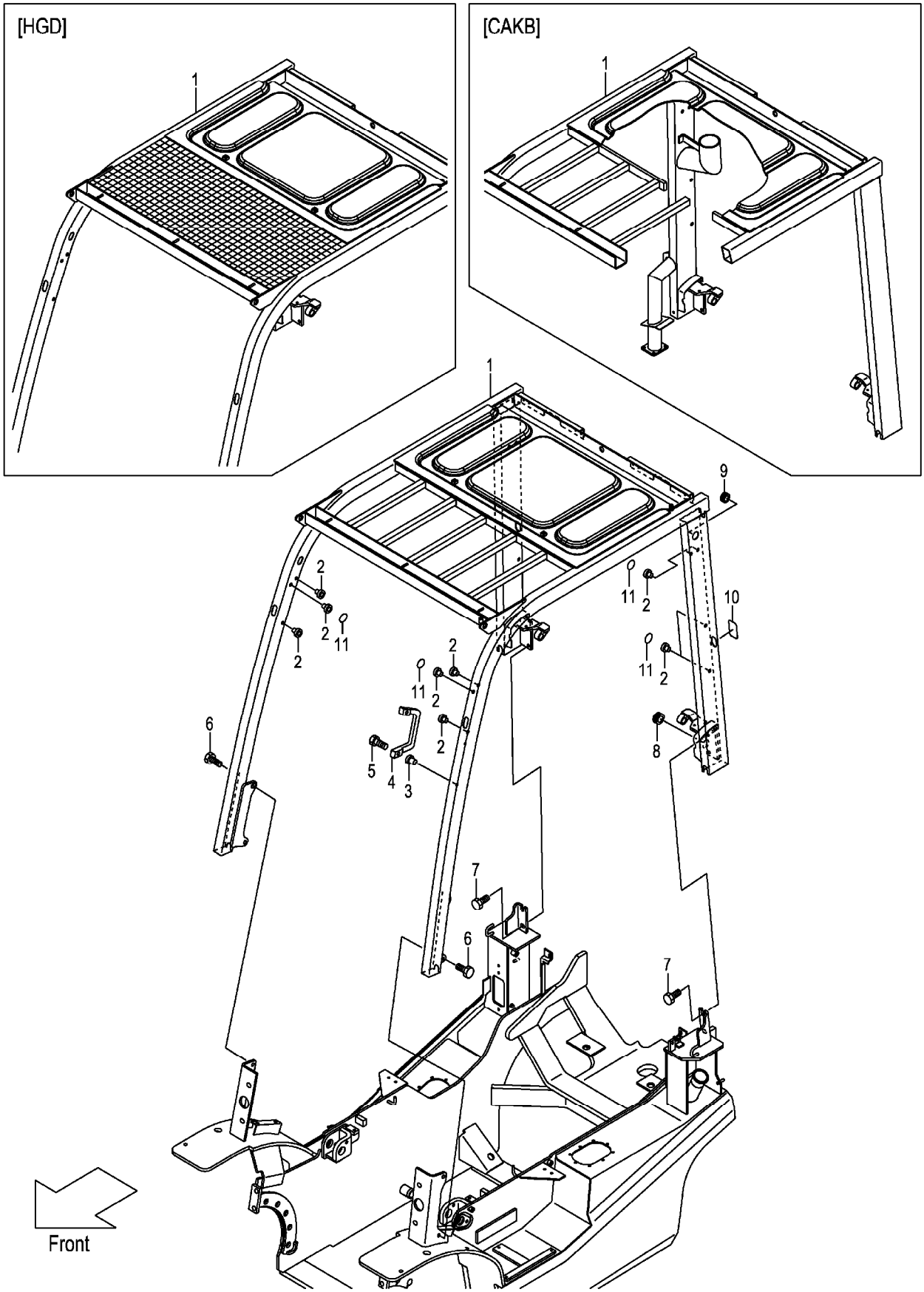

A:FG30C3 FG30T3 C:FD30C3 FD30T3
B:FG30W3 D:FD30W3

Item No	Part No.	Mark	Description		Req'd	Remarks : Serial No.
1	22N55-10161		GUARD,HEAD	ｶﾞｰﾄﾞ	1	(WITHOUT SCB001,SCBCR)
-	52N52-90201		GUARD,HEAD	ｶﾞｰﾄﾞ	1	[HGD]
-	52N55-00101		GUARD,HEAD	ｶﾞｰﾄﾞ	1	[HGH060]
-	52N55-00111		GUARD,HEAD	ｶﾞｰﾄﾞ	1	[HGH100]
-	52N55-00121		GUARD,HEAD	ｶﾞｰﾄﾞ	1	[HGH150]
-	52N55-00131		GUARD,HEAD	ｶﾞｰﾄﾞ	1	[HGH200]
-	52N55-00141		GUARD,HEAD	ｶﾞｰﾄﾞ	1	[HGL]
-	52N50-90101		GUARD,HEAD	ｶﾞｰﾄﾞ	1	[CAKB]
-	52N55-00101		GUARD,HEAD	ｶﾞｰﾄﾞ	1	A,C [EXC][EXE][EXN]
-	52N55-00111		GUARD,HEAD	ｶﾞｰﾄﾞ	1	A,C [HGH100/EXC][HGH100/EXE] [HGH100/EXN]
-	52N55-00121		GUARD,HEAD	ｶﾞｰﾄﾞ	1	A,C [HGH150/EXC][HGH150/EXE] [HGH150/EXN]
-	52N55-00131		GUARD,HEAD	ｶﾞｰﾄﾞ	1	A,C [HGH200/EXC][HGH200/EXE] [HGH200/EXN]
2	514A5-12011		RIVET,POP	ﾘﾍﾞｯﾄ	4	A,B:1-124 C,D:1-225 (WITHOUT SCB001,SCBCR)
-	514A5-12011		RIVET,POP	ﾘﾍﾞｯﾄ	14	A,B:125- C,D:226- (WITHOUT SCB001,SCBCR)
3	516G5-13151		RIVET,POP	ﾘﾍﾞｯﾄ	2	(WITHOUT SCB001,SCBCR)
4	516G5-13051		GRIP	ｸﾞﾘｯﾌﾟ	1	(WITHOUT SCB001,SCBCR)
5	01171-06025		BOLT	ﾎﾞﾙﾄ	2	(WITHOUT SCB001,SCBCR)
6	01186-12040		BOLT	ﾎﾞﾙﾄ	4	(WITHOUT SCB001,SCBCR)
7	01186-12025		BOLT	ﾎﾞﾙﾄ	4	(WITHOUT SCB001,SCBCR)
8	524W5-12091		GROMMET	ｸﾞﾛﾒｯﾄ	1	(WITHOUT SCB001,SCBCR)
9	27662-62721		GROMMET	ｸﾞﾛﾒｯﾄ	1	(WITHOUT SCB001,SCBCR)
10	22N55-13191		SEAT,HG	ｼｰﾄ	2	(WITHOUT SCB001,SCBCR)
11	22N55-13181		SEAL,PANEL-COVER	ｼｰﾙ	10	(WITHOUT SCB001,SCBCR)

FIG.120 FRONT LAMP BRACKET

(F7035120) フロントランプブラケット

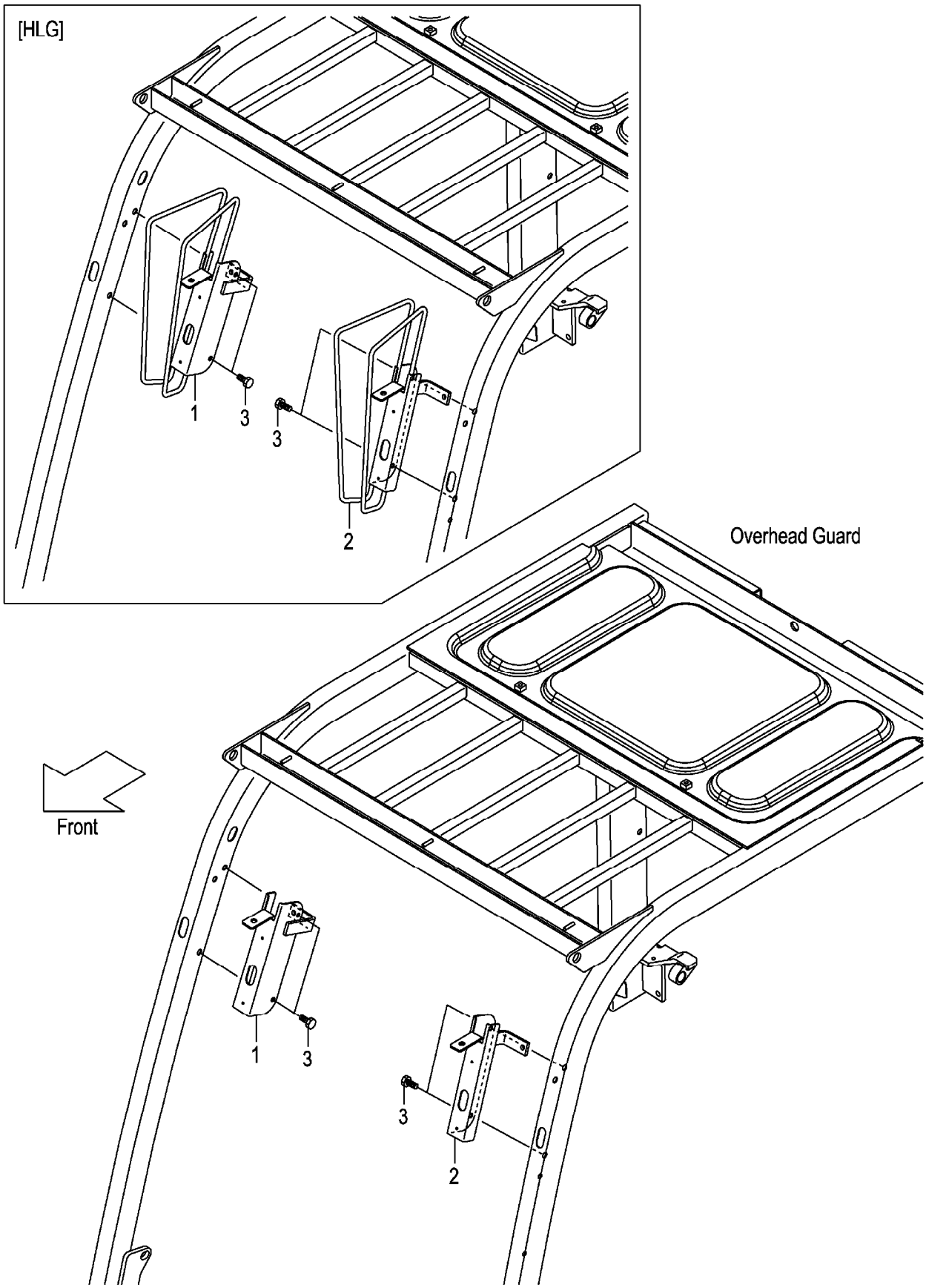

A:FG30C3 FG30T3 FG30W3
B:FD30C3 FD30T3 FD30W3

Item No	Part No.	Mark	Description	Req'd	Remarks : Serial No.
1	22N55-12271		BRACKET,HEAD-LAMP,RH ﾌﾞﾗｹｯﾄ	1	(WITHOUT SCB001,SCBCR,AW071)
-	52N55-12101		BRACKET,HEAD-LAMP,RH ﾌﾞﾗｹｯﾄ	1	[HLG]
2	22N55-12281		BRACKET,HEAD-LAMP,LH ﾌﾞﾗｹｯﾄ	1	(WITHOUT SCB001,SCBCR,AW071)
-	52N55-12111		BRACKET,HEAD-LAMP,LH ﾌﾞﾗｹｯﾄ	1	[HLG]
3	514A5-12021		BOLT ﾎﾞﾙﾄ	4	(WITHOUT SCB001,SCBCR,AW071)

FIG.121 FRONT LAMP BRACKET [HL][BKH]

(F7035130) フロントランプブラケット

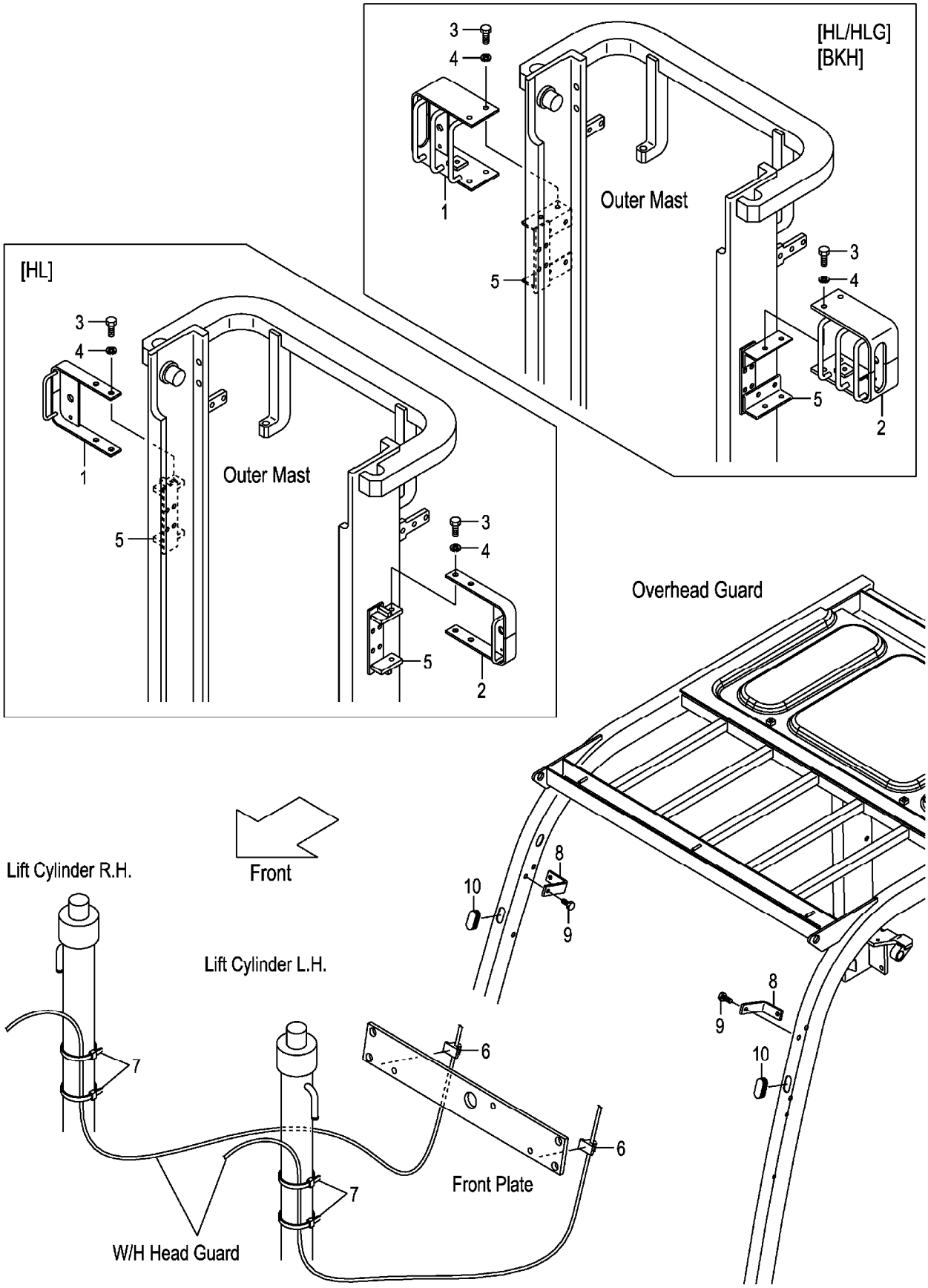

A:FG30C3 FG30T3 FG30W3
B:FD30C3 FD30T3 FD30W3

Item No	Part No.	Mark	Description	Req'd	Remarks : Serial No.
1	534A9-22001		BRACKET,HEAD-LAMP,RH ﾌﾞﾗｹｯﾄ	1	[HL]
-	534A4-22001		BRACKET,HEAD-LAMP,RH ﾌﾞﾗｹｯﾄ	1	[HL/HLG][BKH]
2	534A9-22011		BRACKET,HEAD-LAMP,LH ﾌﾞﾗｹｯﾄ	1	[HL]
-	534A4-22011		BRACKET,HEAD-LAMP,LH ﾌﾞﾗｹｯﾄ	1	[HL/HLG][BKH]
3	01100-12020		BOLT ﾎﾞﾙﾄ	4	[HL][HL/HLG][BKH]
4	02010-00012		WASHER ﾜｯｼｬ	4	[HL][HL/HLG][BKH]
5	641B0-12701		BRACKET,HL ﾌﾞﾗｹｯﾄ	2	[HL]
-	641B0-12751		BRACKET,BKH ﾌﾞﾗｹｯﾄ	2	[HL/HLG][BKH]
6	27732-42221		CLAMP,HARNESS ｸﾗﾝﾌﾟ	2	[HL][HL/HLG][BKH]
7	04913-11380		BAND,INSHULOCK ﾊﾞﾝﾄﾞ	4	[HL][HL/HLG][BKH]
8	22N55-12571		BRACKET,BACK-MIRROR ﾌﾞﾗｹｯﾄ	2	[HL][HL/HLG][BKH]
9	514A5-12021		BOLT ﾎﾞﾙﾄ	2	[HL][HL/HLG][BKH]
10	27662-63711		GROMMET ｸﾞﾛﾒｯﾄ	2	[HL][HL/HLG][BKH]

FIG.122 REAR LAMP COVER

(F7035140) ﾘﾔｰﾗﾝﾌﾟｶﾊﾞｰ

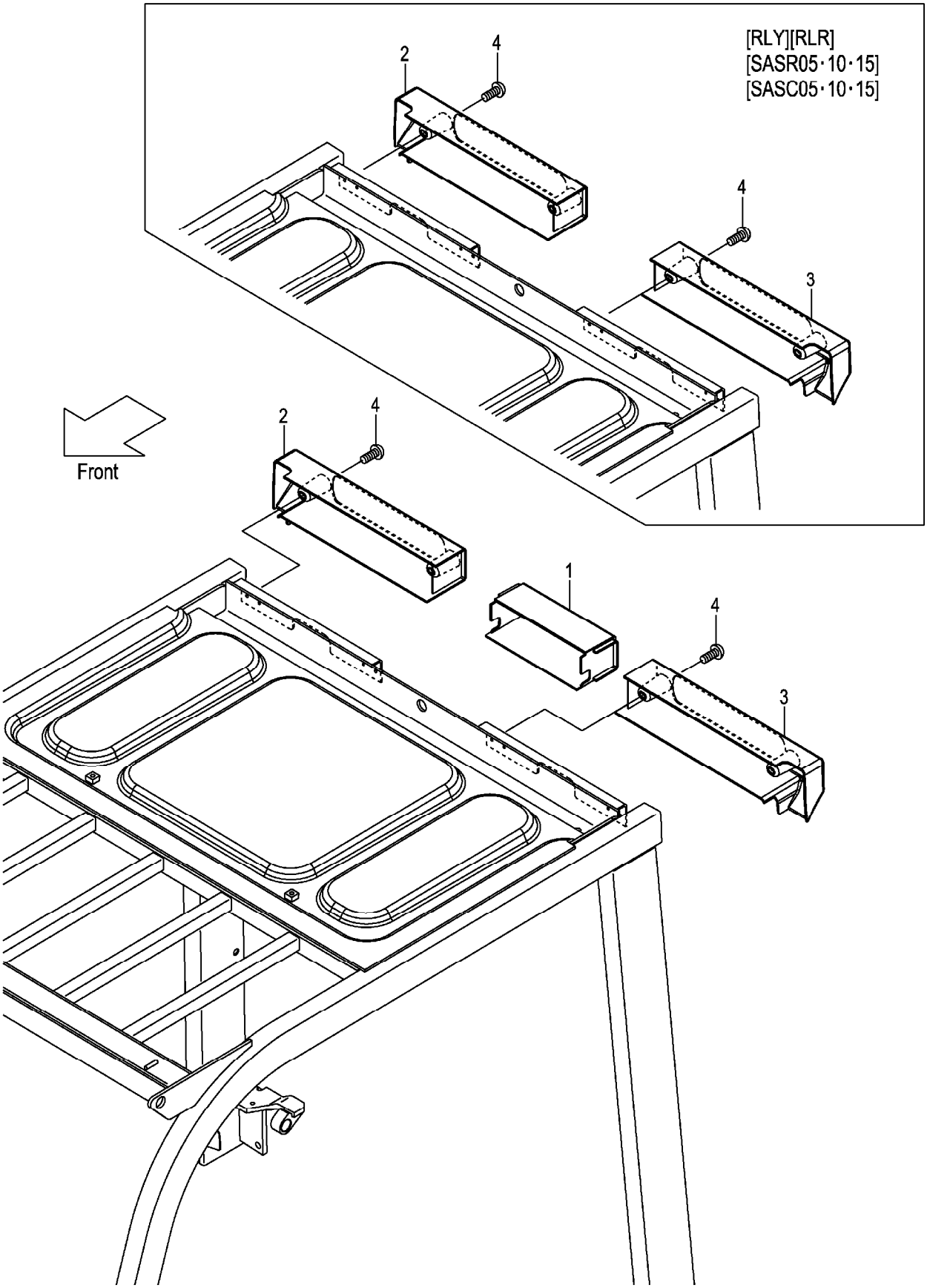

A:FG30C3 FG30T3 C:FD30C3 FD30T3
B:FG30W3 D:FD30W3

Item No	Part No.	Mark	Description	Req'd	Remarks : Serial No.
1	22N55-12701		COVER,REAR-LAMP カバー	1	(WITHOUT RLY,RLR,SASR,SASC)
-	52N55-00511		COVER,REAR-LAMP カバー	1	[HGH060][HGH100]
-	52N55-00521		COVER,REAR-LAMP カバー	1	[HGH150][HGH200]
-	52N55-00511		COVER,REAR-LAMP カバー	1	A,C [EXC][EXE][EXN]
-	52N55-00511		COVER,REAR-LAMP カバー	1	A,C [HGH100/EXC][HGH100/EXE] [HGH100/EXN]
-	52N55-00521		COVER,REAR-LAMP カバー	1	A,C [HGH150/EXC][HGH150/EXE] [HGH150/EXN]
-	52N55-00521		COVER,REAR-LAMP カバー	1	A,C [HGH200/EXC][HGH200/EXE] [HGH200/EXN]
2	22N55-12711		COVER,REAR-LAMP,RH カバー	1	(WITHOUT RLY/SCB,RLR/SCB)
3	22N55-12721		COVER,REAR-LAMP,LH カバー	1	(WITHOUT RLY/SCB,RLR/SCB)
4	214A6-42252		SCREW スクリュ	4	(WITHOUT RLY/SCB,RLR/SCB)

FIG.123 REAR LAMP COVER [RRE]

(F7035150) ﾘﾔｰﾗﾝﾌﾟｶﾊﾞｰ

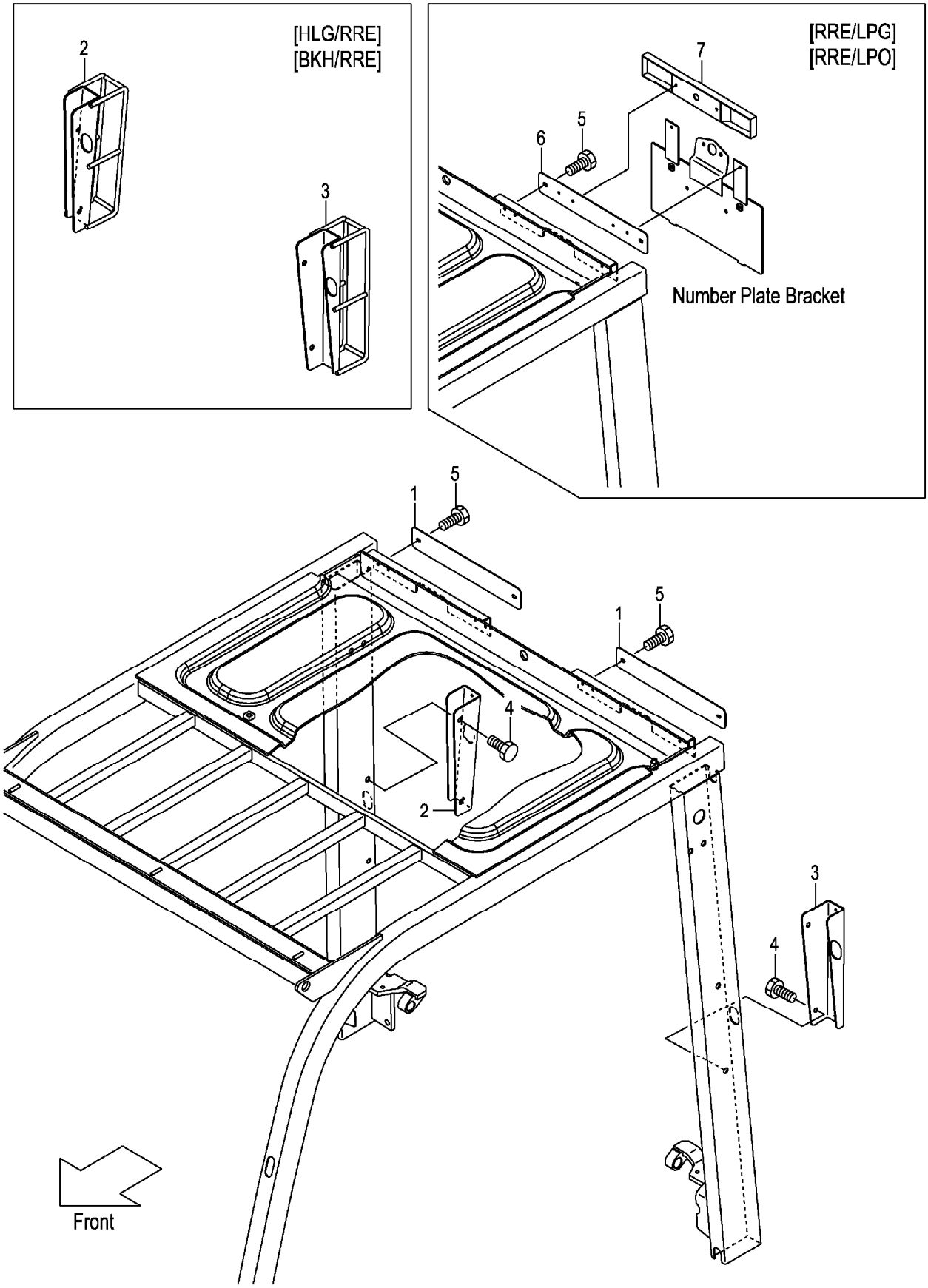

A:FG30C3 FG30T3 FG30W3
B:FD30C3 FD30T3 FD30W3

Item No	Part No.	Mark	Description		Req'd	Remarks : Serial No.
1	52N59-92051		PLATE	ﾌﾟﾚｰﾄ	2	[RRE]
-	52N59-92051		PLATE	ﾌﾟﾚｰﾄ	1	[RRE/LPG][RRE/LPO]
2	52N59-92021		BRACKET,REAR-LAMP,RH	ﾌﾞﾗｹｯﾄ	1	[RRE]
-	52N55-12001		BRACKET,REAR-LAMP,RH	ﾌﾞﾗｹｯﾄ	1	[HLG/RRE][BKH/RRE]
3	52N59-92031		BRACKET,REAR-LAMP,LH	ﾌﾞﾗｹｯﾄ	1	[RRE]
-	52N55-12011		BRACKET,REAR-LAMP,LH	ﾌﾞﾗｹｯﾄ	1	[HLG/RRE][BKH/RRE]
4	514A5-12021		BOLT	ﾎﾞﾙﾄ	4	[RRE]
5	01031-06065		BOLT	ﾎﾞﾙﾄ	4	[RRE]
6	52N59-92161		PLATE	ﾌﾟﾚｰﾄ	1	[RRE/LPG][RRE/LPO]
7	52N59-92121		COVER,W/A	ｶﾊﾞｰ	1	[RRE/LPG][RRE/LPO]

FIG.124 HEAD GUARD PARTS

(F70351A0) ﾍｯﾄﾞｶﾞｰﾄﾞﾊﾟｰﾂ

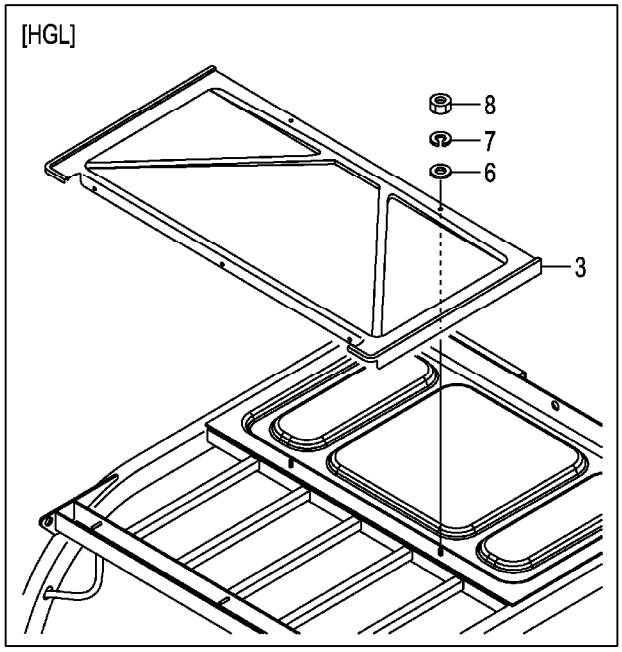

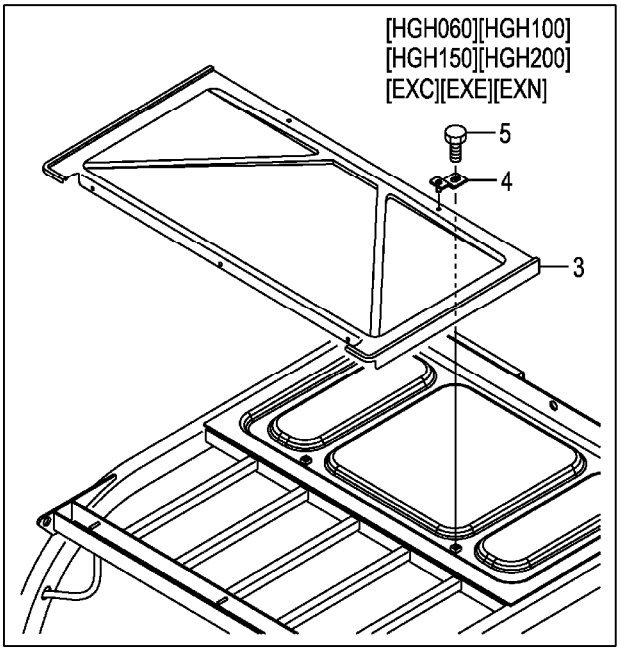

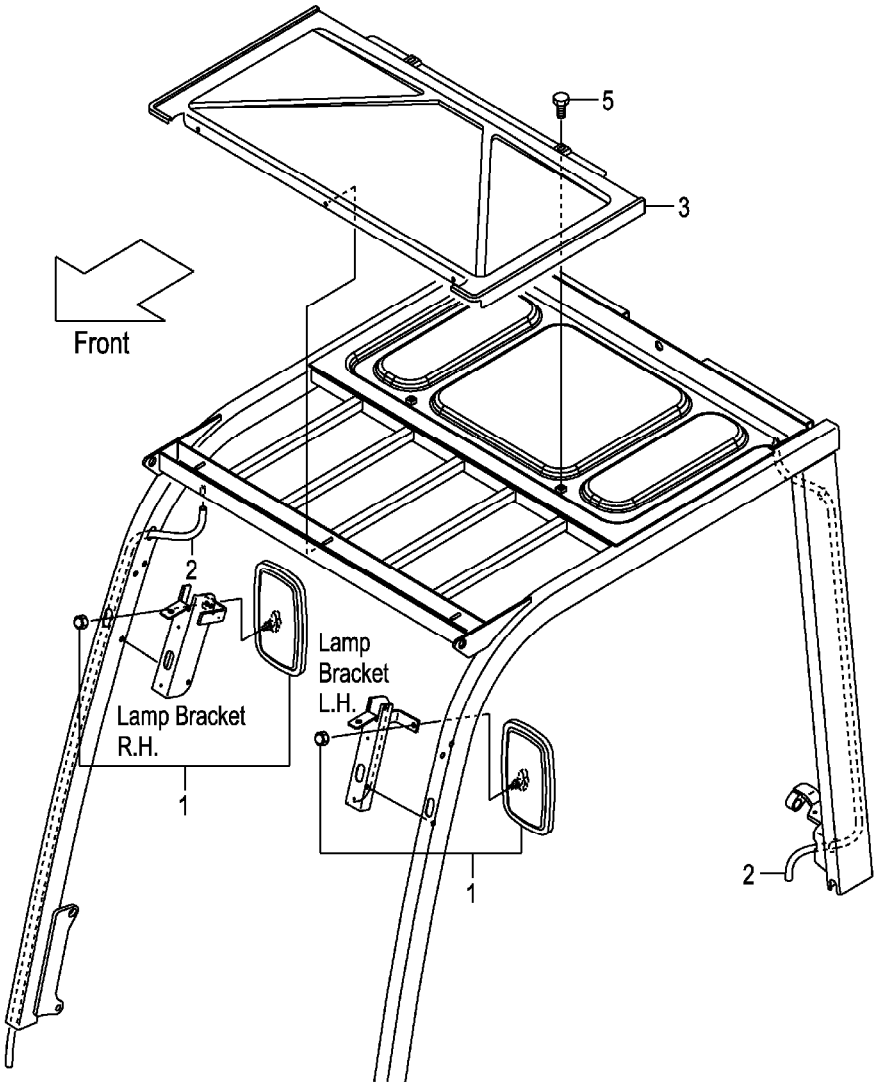

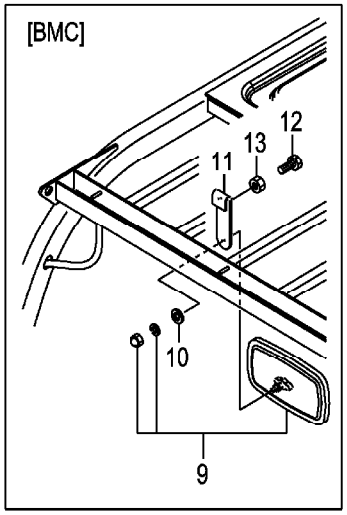

A:FG30C3 FG30T3 C:FD30C3 FD30T3
B:FG30W3 D:FD30W3

Item No	Part No.	Mark	Description		Req'd	Remarks : Serial No.
1	239A9-92001		MIRROR	ﾐﾗｰ	2	
2	534A5-00401		HOSE,VINYL	ﾎｰｽ	2	(WITHOUT SCB001,SCBCR)
-	534A5-00411		HOSE,VINYL	ﾎｰｽ	2	[HGH060][HGH100]
-	577H5-13051		HOSE,VINYL	ﾎｰｽ	2	[HGH150][HGH200]
-	516M5-12301		HOSE,VINYL	ﾎｰｽ	2	[HGL]
-	534A5-00411		HOSE,VINYL	ﾎｰｽ	2	A,C [EXC][EXE][EXN]
-	534A5-00411		HOSE,VINYL	ﾎｰｽ	2	A,C [HGH100/EXC][HGH100/EXE] [HGH100/EXN]
-	577H5-13051		HOSE,VINYL	ﾎｰｽ	2	A,C [HGH150/EXC][HGH150/EXE] [HGH150/EXN]
-	577H5-13051		HOSE,VINYL	ﾎｰｽ	2	A,C [HGH200/EXC][HGH200/EXE] [HGH200/EXN]
3	22N55-12901		CANVAS	ｷｬﾝﾊﾞｽ	1	
-	52N55-00501		CANVAS	ｷｬﾝﾊﾞｽ	1	[HGH060][HGH100][HGH150] [HGH200][HGL]
-	52N55-00501		CANVAS	ｷｬﾝﾊﾞｽ	1	A,C [EXC][EXE][EXN]
4	52N55-00551		BRACKET	ﾌﾞﾗｹｯﾄ	2	[HGH060][HGH100][HGH150] [HGH200]
-	52N55-00551		BRACKET	ﾌﾞﾗｹｯﾄ	2	A,C [EXC][EXE][EXN]
5	01185-08016		BOLT	ﾎﾞﾙﾄ	2	(WITHOUT HGL)
6	02000-00006		WASHER	ﾜｯｼｬ	2	[HGL]
7	02010-00006		WASHER	ﾜｯｼｬ	2	[HGL]
8	01400-00006		NUT	ﾅｯﾄ	2	[HGL]
9	239A9-92001		MIRROR	ﾐﾗｰ	1	[BMC]
10	222A9-32011		WASHER	ﾜｯｼｬ	1	[BMC]
11	539A9-32001		BRACKET,BACK-MIRROR	ﾌﾞﾗｹｯﾄ	1	[BMC]
12	01100-08025		BOLT	ﾎﾞﾙﾄ	2	[BMC]
13	01402-00008		NUT	ﾅｯﾄ	2	[BMC]

FIG.125 ACCEL PEDAL (GASOLINE)

(F7035210) アクセルペダル

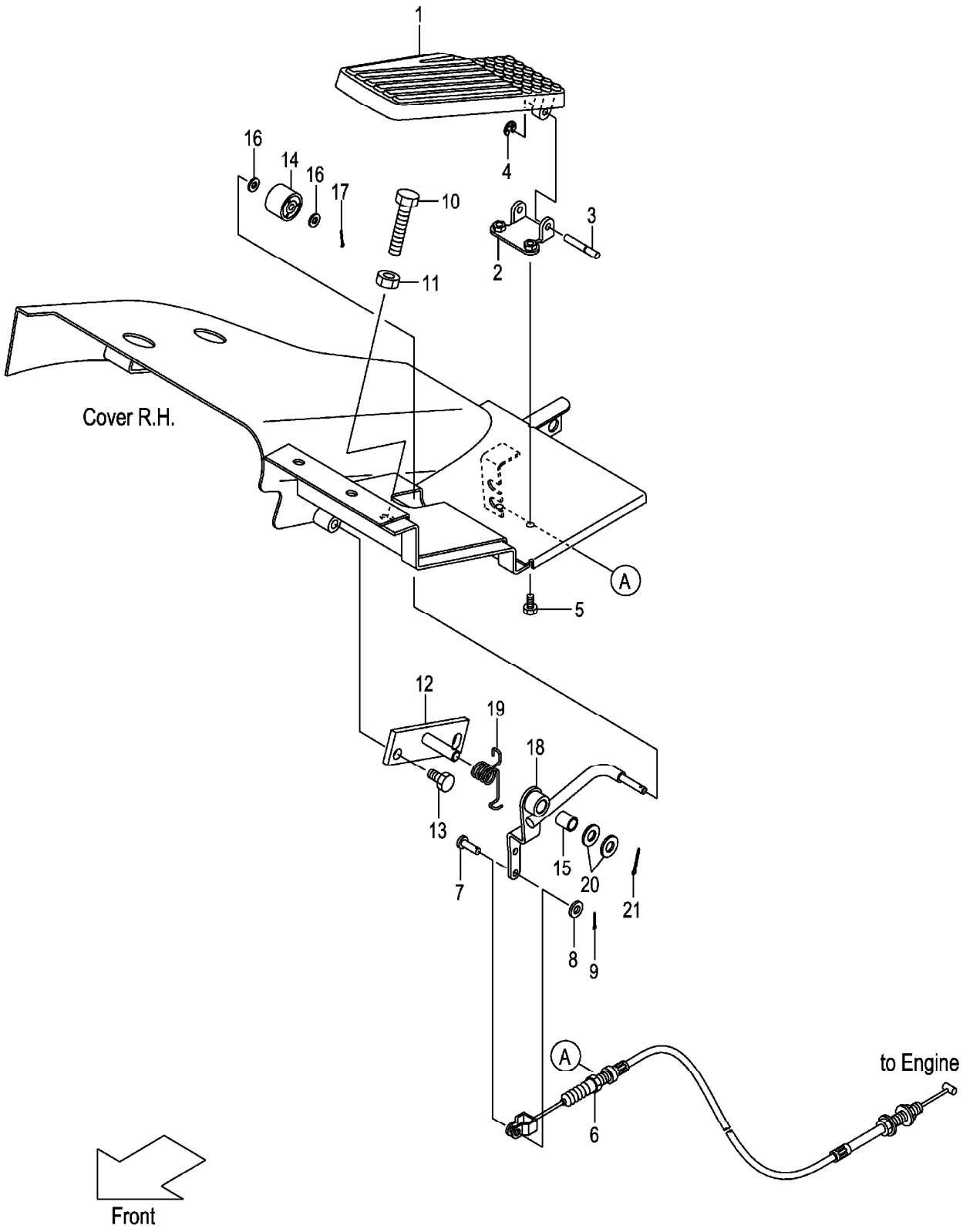

A:FG30C3 FG30T3 FG30W3

Item No	Part No.	Mark	Description		Req'd	Remarks : Serial No.
A1	22N55-20211		PEDAL-ASSY,ACCEL	ｱｸｾﾙﾍﾟﾀﾞﾙｱｯｾﾝ	1	INC.1-4
1	NO PART NO.	#	PEDAL	ﾍﾟﾀﾞﾙ	1	
2	NO PART NO.	#	SUPPORT	ｻﾎﾟｰﾄ	1	
3	22N55-22121		SHAFT	ｼｬﾌﾄ	1	
4	22N55-22131		E-RING	Eﾘﾝｸﾞ	1	
5	01183-06012		BOLT	ﾎﾞﾙﾄ	2	
6	22B55-22011		CABLE,ACCEL	ｹｰﾌﾞﾙ	1	
7	02262-06015		PIN,CLEVIS	ﾋﾟﾝ	1	
8	02000-00006		WASHER	ﾜｯｼｬ	1	
9	02200-16015		PIN,COTTER	ﾋﾟﾝ	1	
10	01100-10025		BOLT	ﾎﾞﾙﾄ	1	
11	01400-00010		NUT	ﾅｯﾄ	1	
12	22N55-22011		BRACKET,ACCEL-LINK	ﾌﾞﾗｹｯﾄ	1	
13	01185-08016		BOLT	ﾎﾞﾙﾄ	2	
A2	22N55-20201		LINK-ASSY,ACCEL	ｱｸｾﾙﾘﾝｸｱｯｾﾝ	1	INC.14-18
14	214A5-22001		ROLLER	ﾛｰﾗ	1	
15	23655-22101		BUSHING	ﾌﾞｯｼﾝｸﾞ	1	
16	02000-00006		WASHER	ﾜｯｼｬ	2	
17	02200-16010		PIN,COTTER	ﾋﾟﾝ	1	
18	NO PART NO.	#	LINK,ACCEL	ﾘﾝｸ	1	
19	22N55-22031		SPRING	ｽﾌﾟﾘﾝｸﾞ	1	
20	02000-00010		WASHER	ﾜｯｼｬ	2	
21	02200-03020		PIN,COTTER	ﾋﾟﾝ	1	

FIG.126 ACCEL PEDAL (DIESEL)

(F7035220) アクセルペダル

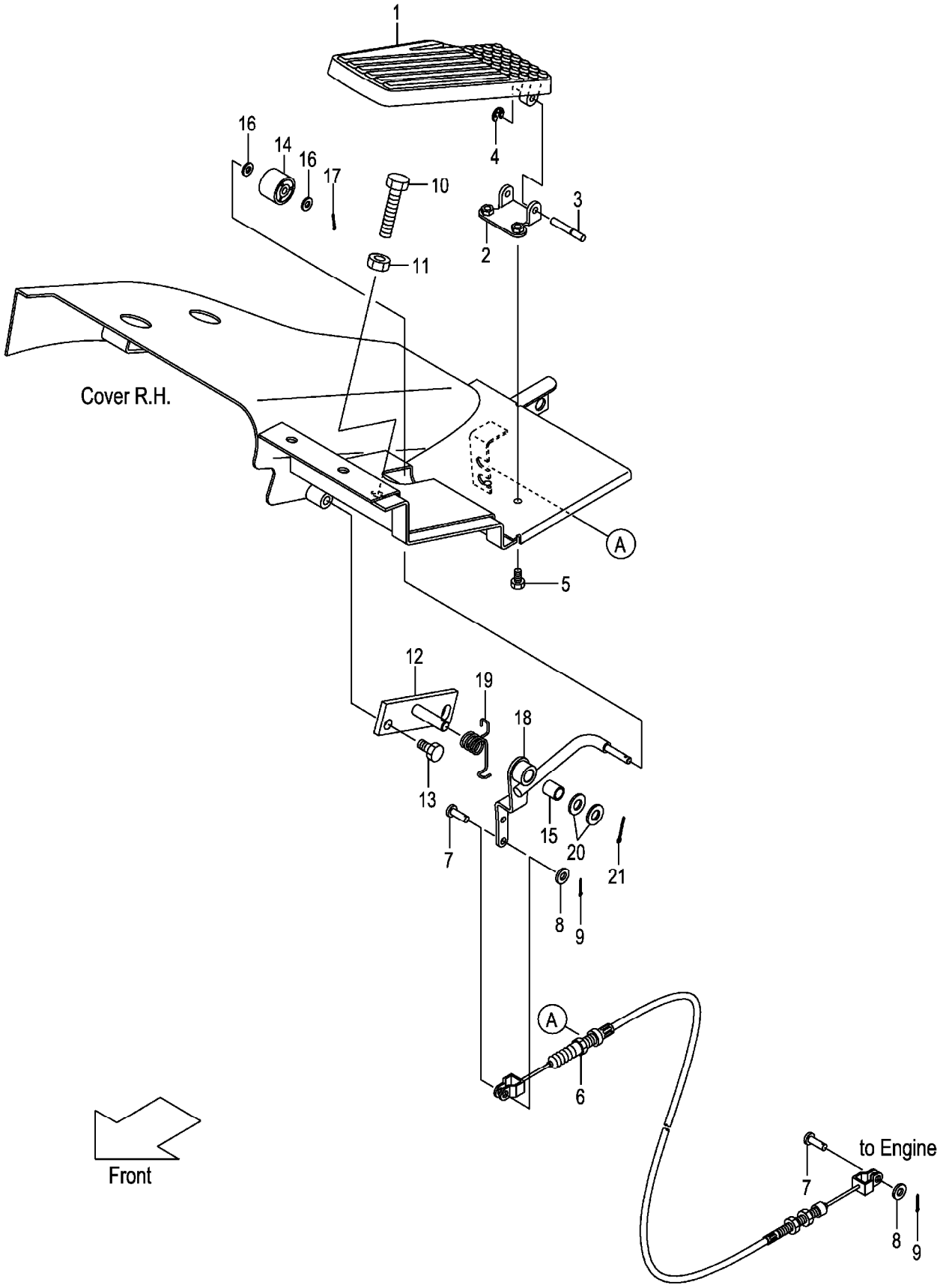

A:FD30C3 FD30T3 FD30W3

Item No	Part No.	Mark	Description		Req'd	Remarks : Serial No.
A1	22N55-20211		PEDAL-ASSY,ACCEL	ｱｸｾﾙﾍﾟﾀﾞﾙｱｯｾﾝ	1	INC.1-4
1	NO PART NO.	#	PEDAL	ﾍﾟﾀﾞﾙ	1	
2	NO PART NO.	#	SUPPORT	ｻﾎﾟｰﾄ	1	
3	22N55-22121		SHAFT	ｼｬﾌﾄ	1	
4	22N55-22131		E-RING	Eﾘﾝｸﾞ	1	
5	01183-06012		BOLT	ﾎﾞﾙﾄ	2	
6	22N55-22201		CABLE,ACCEL	ｹｰﾌﾞﾙ	1	
7	02262-06015		PIN,CLEVIS	ﾋﾟﾝ	2	
8	02000-00006		WASHER	ﾜｯｼｬ	2	
9	02200-16015		PIN,COTTER	ﾋﾟﾝ	2	
10	01120-10050		BOLT	ﾎﾞﾙﾄ	1	
11	01400-00010		NUT	ﾅｯﾄ	1	
12	22N55-22011		BRACKET,ACCEL-LINK	ﾌﾞﾗｹｯﾄ	1	
13	01185-08016		BOLT	ﾎﾞﾙﾄ	2	
A2	22N55-20201		LINK-ASSY,ACCEL	ｱｸｾﾙﾘﾝｸｱｯｾﾝ	1	INC.14-18
14	214A5-22001		ROLLER	ﾛｰﾗ	1	
15	23655-22101		BUSHING	ﾌﾞｯｼﾝｸﾞ	1	
16	02000-00006		WASHER	ﾜｯｼｬ	2	
17	02200-16010		PIN,COTTER	ﾋﾟﾝ	1	
18	NO PART NO.	#	LINK,ACCEL	ﾘﾝｸ	1	
19	22N55-22031		SPRING	ｽﾌﾟﾘﾝｸﾞ	1	
20	02000-00010		WASHER	ﾜｯｼｬ	2	
21	02200-03020		PIN,COTTER	ﾋﾟﾝ	1	

FIG.127 FOOT PEDAL (CLUTCH)

(F7035410) フットペダル

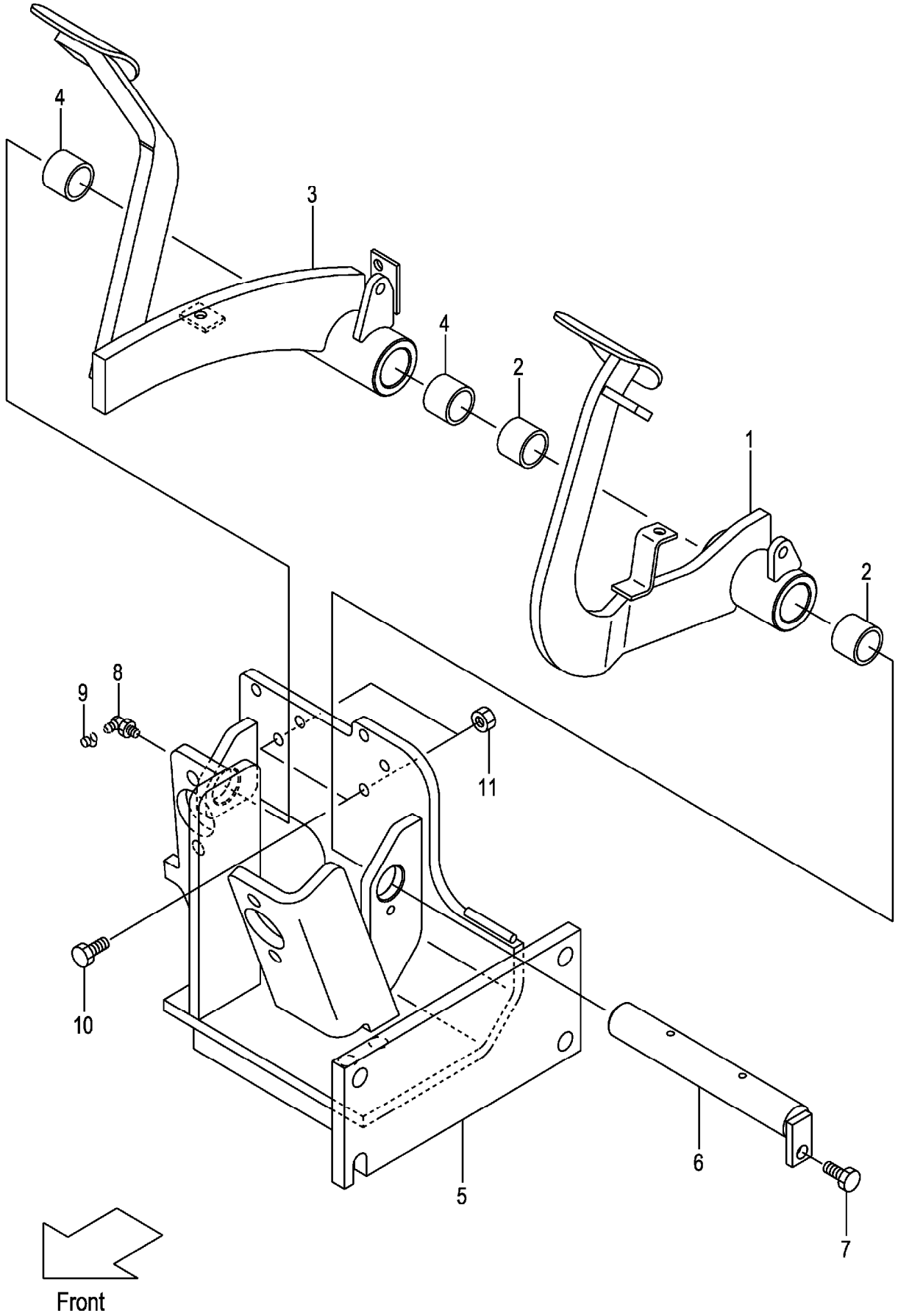

A:FG30C3
B:FD30C3

Item No	Part No.	Mark	Description		Req'd	Remarks : Serial No.
A1	22N45-30303		PEDAL-ASSY,CLUTCH	ｸﾗｯﾁﾍﾟﾀﾞﾙｱｯｾﾝ	1	INC.1,2
1	NO PART NO.	#	PEDAL,CLUTCH	ﾍﾟﾀﾞﾙ	1	
2	23655-42421		BUSHING,PEDAL	ﾌﾞｯｼﾝｸﾞ	2	
A2	22N45-40302		PEDAL-ASSY,BRAKE	ﾌﾞﾚｰｷﾍﾟﾀﾞﾙｱｯｾﾝ	1	INC.3,4
3	NO PART NO.	#	PEDAL,BRAKE	ﾍﾟﾀﾞﾙ	1	
4	23655-42421		BUSHING,PEDAL	ﾌﾞｯｼﾝｸﾞ	2	
5	22N45-40202		BRACKET,PEDAL	ﾌﾞﾗｹｯﾄ	1	
6	22N45-42101		SHAFT,PEDAL	ｼｬﾌﾄ	1	
7	01183-08016		BOLT	ﾎﾞﾙﾄ	1	
8	04901-00190		FITTING	ﾌｨｯﾃｨﾝｸﾞ	1	
9	22199-12401		CAP,NIPPLE	ｷｬｯﾌﾟ	1	
10	01100-10025		BOLT	ﾎﾞﾙﾄ	2	
11	01402-00010		NUT	ﾅｯﾄ	2	

FIG.128 FOOT PEDAL (TOR-CON)

(F7035420) フットペダル

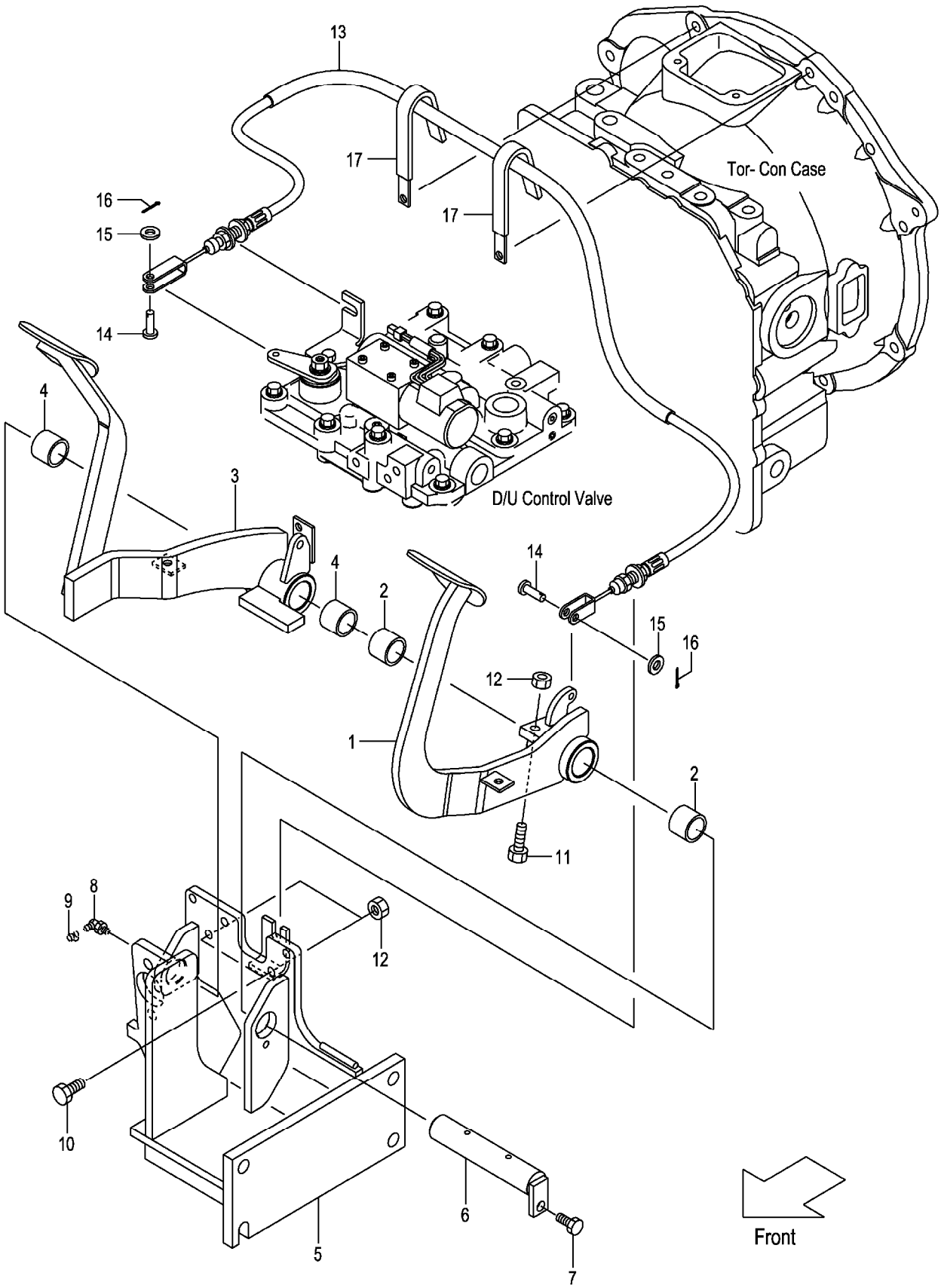

A:FG30T3
B:FD30T3

Item No	Part No.	Mark	Description		Req'd	Remarks : Serial No.
A1	22N55-40402		PEDAL-ASSY,INCHING	ｲﾝﾁﾝｸﾞﾍﾟﾀﾞﾙｱｯｾﾝ	1	INC.1,2
1	NO PART NO.	#	PEDAL,INCHING	ﾍﾟﾀﾞﾙ	1	
2	23655-42421		BUSHING,PEDAL	ﾌﾞｯｼﾝｸﾞ	2	
A2	22N55-40302		PEDAL-ASSY,BRAKE	ﾌﾞﾚｰｷﾍﾟﾀﾞﾙｱｯｾﾝ	1	INC.3,4
3	NO PART NO.	#	PEDAL,BRAKE	ﾍﾟﾀﾞﾙ	1	
4	23655-42421		BUSHING,PEDAL	ﾌﾞｯｼﾝｸﾞ	2	
5	22N55-40202		BRACKET,PEDAL	ﾌﾞﾗｹｯﾄ	1	
6	22N55-42101		SHAFT,PEDAL	ｼｬﾌﾄ	1	
7	01183-08016		BOLT	ﾎﾞﾙﾄ	1	
8	04901-00190		FITTING	ﾌｨｯﾃｨﾝｸﾞ	1	
9	22199-12401		CAP,NIPPLE	ｷｬｯﾌﾟ	1	
10	01100-10025		BOLT	ﾎﾞﾙﾄ	2	
11	01100-10030		BOLT	ﾎﾞﾙﾄ	1	A:1-116
						B:1-138
-	01120-10040		BOLT	ﾎﾞﾙﾄ	1	A:117-
						B:139-
12	01402-00010		NUT	ﾅｯﾄ	3	
13	22N55-42601		CABLE,INCHING	ｹｰﾌﾞﾙ	1	
14	02262-06020		PIN,CLEVIS	ﾋﾟﾝ	2	
15	02000-00006		WASHER	ﾜｯｼｬ	2	
16	02200-16015		PIN,COTTER	ﾋﾟﾝ	2	
17	214A2-42331		CLIP	ｸﾘｯﾌﾟ	2	A:111-
						B:127-

FIG.129 FOOT PEDAL (OIL CLUTCH)

(F7035430) フットペダル

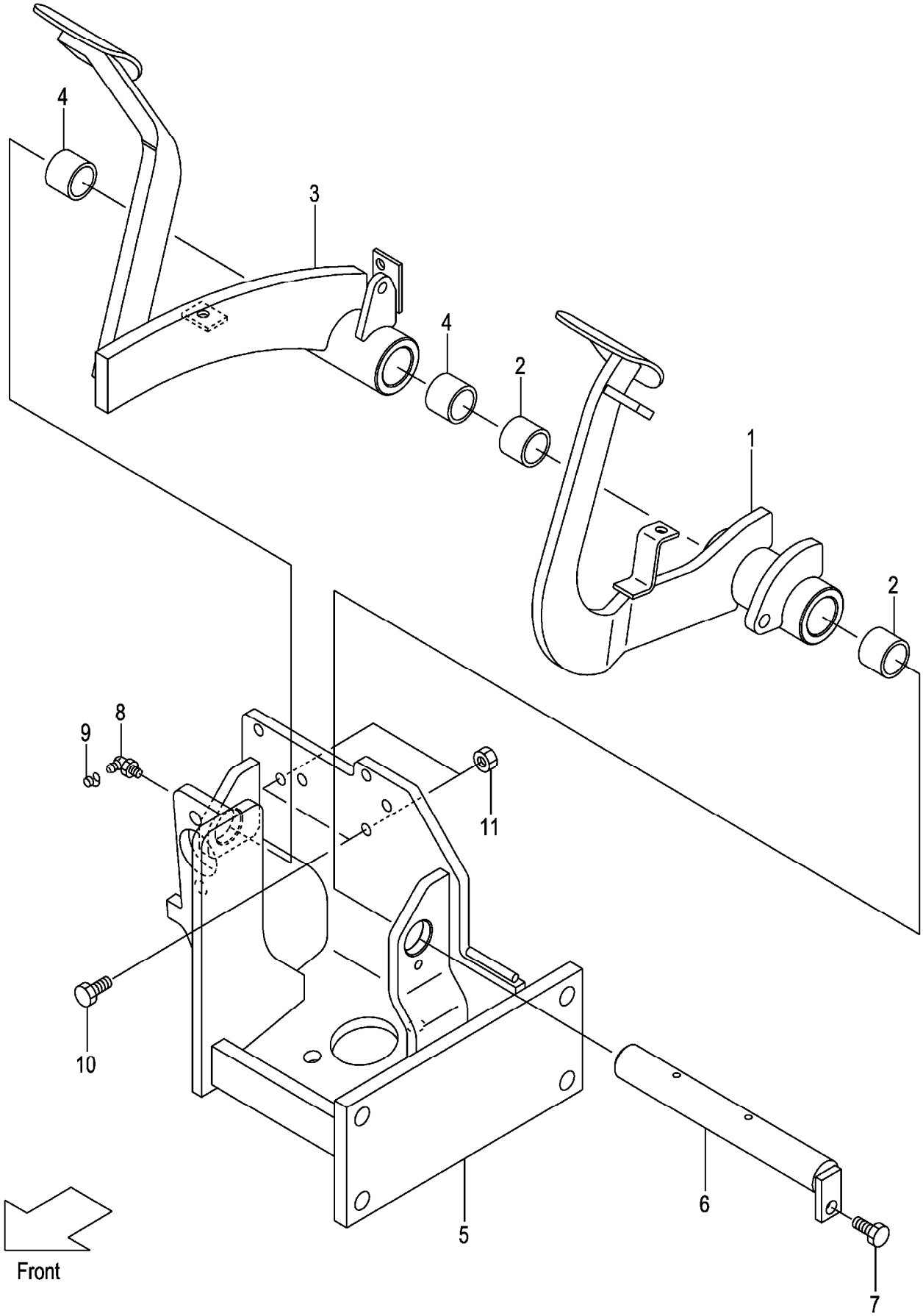

A:FG30W3
B:FD30W3

Item No	Part No.	Mark	Description		Req'd	Remarks : Serial No.
A1	22P45-30302		PEDAL-ASSY,CLUTCH	ｸﾗｯﾁﾍﾟﾀﾞﾙｱｯｾﾝ	1	INC.1,2
1	NO PART NO.	#	PEDAL,CLUTCH	ﾍﾟﾀﾞﾙ	1	
2	23655-42421		BUSHING,PEDAL	ﾌﾞｯｼﾝｸﾞ	2	
A2	22N45-40302		PEDAL-ASSY,BRAKE	ﾌﾞﾚｰｷﾍﾟﾀﾞﾙｱｯｾﾝ	1	INC.3,4
3	NO PART NO.	#	PEDAL,BRAKE	ﾍﾟﾀﾞﾙ	1	
4	23655-42421		BUSHING,PEDAL	ﾌﾞｯｼﾝｸﾞ	2	
5	22P45-40201		BRACKET,PEDAL	ﾌﾞﾗｹｯﾄ	1	
6	22P45-42101		SHAFT,PEDAL	ｼｬﾌﾄ	1	
7	01183-08016		BOLT	ﾎﾞﾙﾄ	1	
8	04901-00190		FITTING	ﾌｨｯﾃｨﾝｸﾞ	1	
9	22199-12401		CAP,NIPPLE	ｷｬｯﾌﾟ	1	
10	01100-10025		BOLT	ﾎﾞﾙﾄ	2	
11	01402-00010		NUT	ﾅｯﾄ	2	

FIG.130 FOOT PEDAL CYLINDER (CLUTCH)

(F7035440) ﾌｯﾄﾍﾟﾀﾞﾙｼﾘﾝﾀﾞ

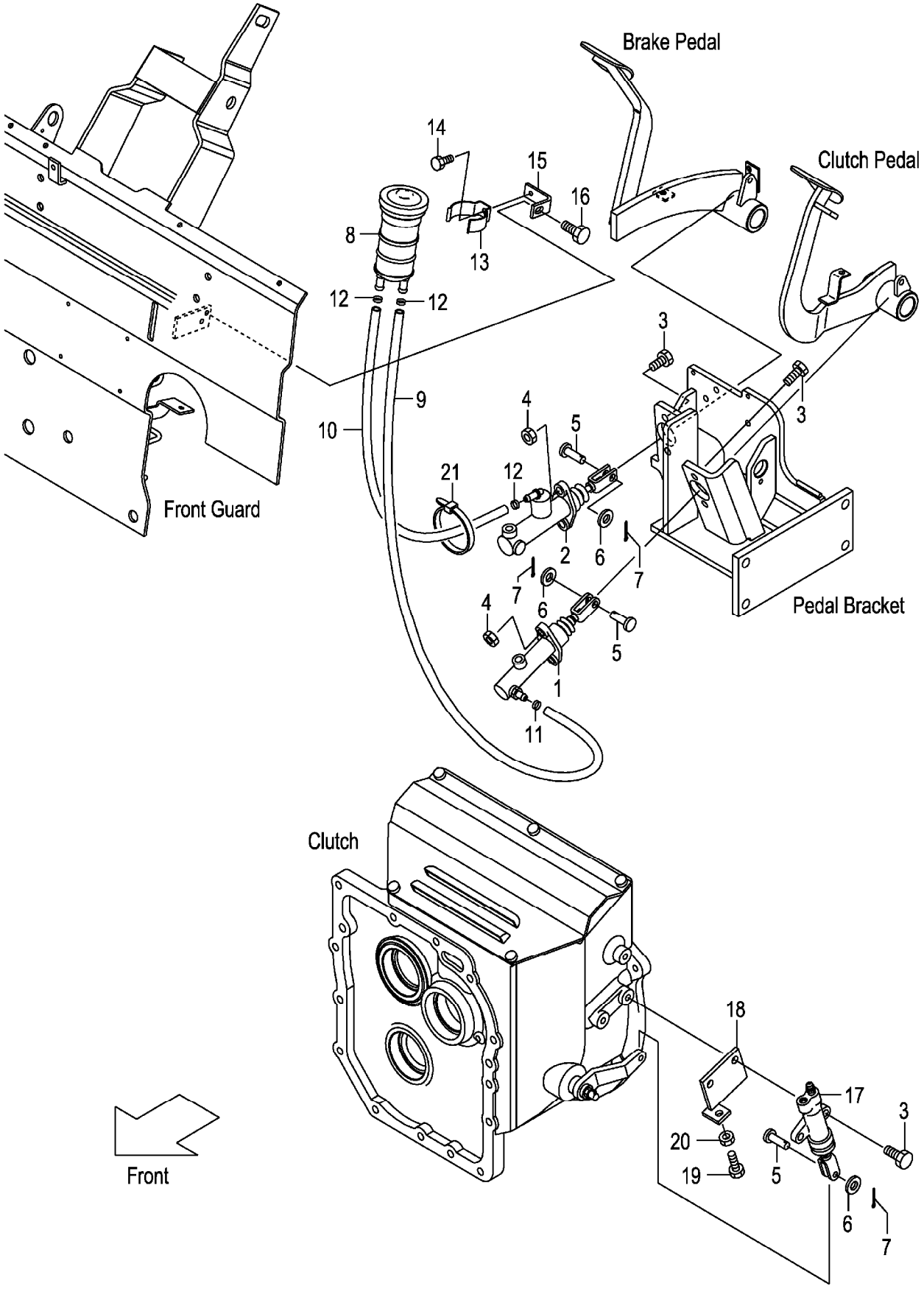

A:FG30C3
B:FD30C3

Item No	Part No.	Mark	Description		Req'd	Remarks : Serial No.
1	239A5-40501		CYL,CLUTCH-MASTER	ｼﾘﾝﾀﾞ	1	SEE FIG.137
2	27045-40302		CYL,BRAKE-MASTER	ｼﾘﾝﾀﾞ	1	SEE FIG.139
3	01184-10030		BOLT	ﾎﾞﾙﾄ	6	
4	01400-00010		NUT	ﾅｯﾄ	4	
5	02262-08025		PIN,CLEVIS	ﾋﾟﾝ	3	
6	02000-00008		WASHER	ﾜｯｼｬ	3	
7	02200-02020		PIN,COTTER	ﾋﾟﾝ	3	
8	216G5-42011		TANK,RESERVE	ﾀﾝｸ	1	
9	22N45-32151		HOSE,RESERVE	ﾎｰｽ	1	
10	22N45-32161		HOSE,RESERVE	ﾎｰｽ	1	
11	25595-42491		BAND,HOSE	ﾊﾞﾝﾄﾞ	1	
12	25785-43091		BAND,HOSE	ﾊﾞﾝﾄﾞ	3	
13	224G5-42061		CLIP,RESERVE-TANK	ｸﾘｯﾌﾟ	1	
14	01183-06010		BOLT	ﾎﾞﾙﾄ	1	
15	22N55-42141		BRACKET	ﾌﾞﾗｹｯﾄ	1	
16	01185-08016		BOLT	ﾎﾞﾙﾄ	1	
17	214A5-32312		CYL,CLUTCH-RELEASE	ｼﾘﾝﾀﾞ	1	SEE FIG.140
18	22N45-32201		BRACKET,RELEASE-CYL	ﾌﾞﾗｹｯﾄ	1	
19	01100-10025		BOLT	ﾎﾞﾙﾄ	1	
20	01402-00010		NUT	ﾅｯﾄ	1	
21	04913-11100		BAND	ﾊﾞﾝﾄﾞ	1	

FIG.131 FOOT PEDAL CYLINDER (TOR-CON)

(F7035450) ﾌｯﾄﾍﾟﾀﾞﾙｼﾘﾝﾀﾞ

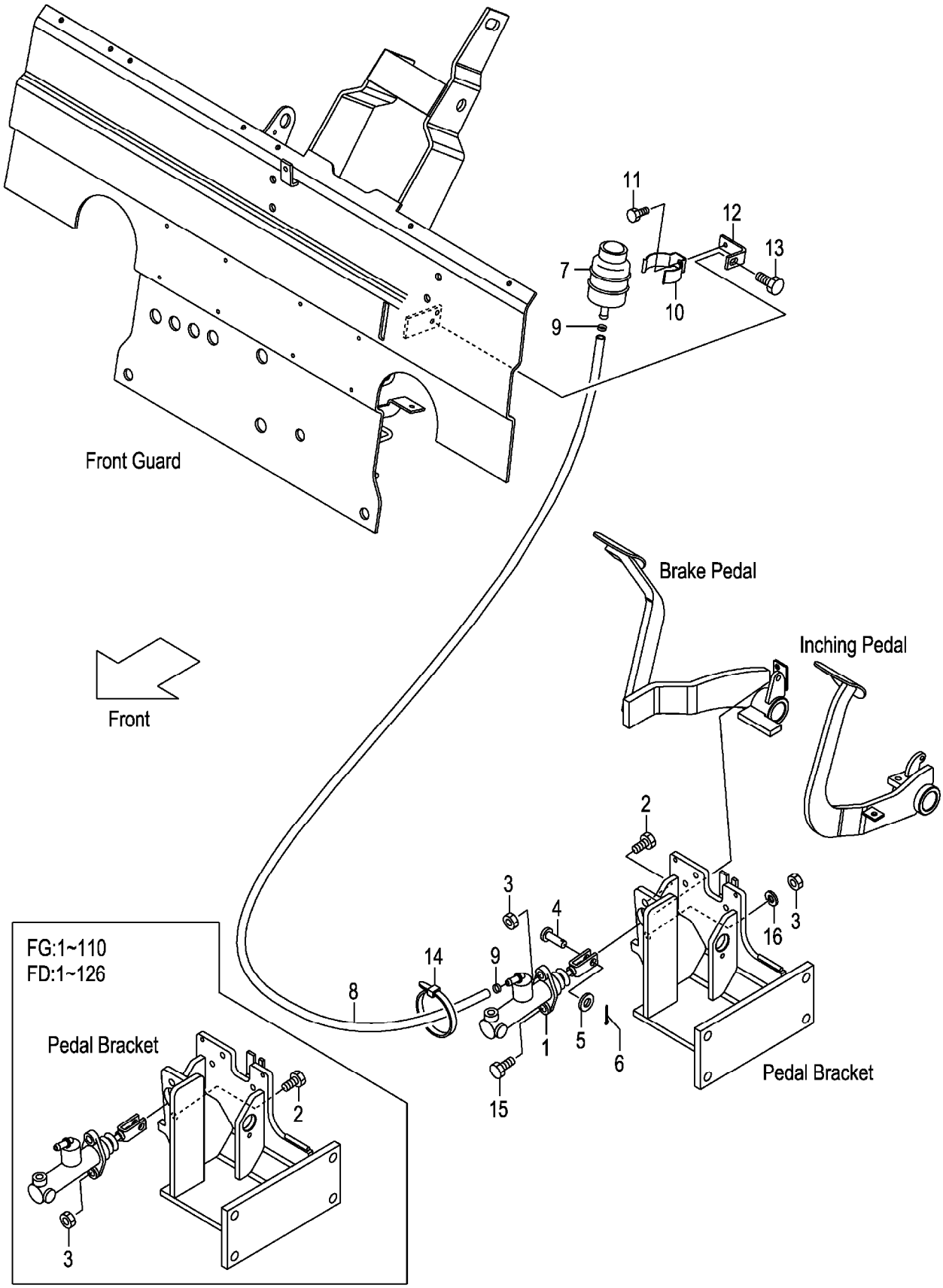

A:FG30T3
B:FD30T3

Item No	Part No.	Mark	Description		Req'd	Remarks : Serial No.
1	27045-40302		CYL,BRAKE-MASTER	ｼﾘﾝﾀﾞ	1	SEE FIG.139
2	01184-10030		BOLT	ﾎﾞﾙﾄ	2	A:1-110
						B:1-126
-	01184-10030		BOLT	ﾎﾞﾙﾄ	1	A:111-
						B:127-
3	01400-00010		NUT	ﾅｯﾄ	2	
4	02262-08025		PIN,CLEVIS	ﾋﾟﾝ	1	
5	02000-00008		WASHER	ﾜｯｼｬ	1	
6	02200-02020		PIN,COTTER	ﾋﾟﾝ	1	
7	23775-42101		TANK,RESERVE	ﾀﾝｸ	1	
8	27045-42371		HOSE,RESERVE	ﾎｰｽ	1	A:1-110
						B:1-126
-	22655-42591		HOSE,RESERVE	ﾎｰｽ	1	A:111-
						B:127-
9	25595-42491		BAND,HOSE	ﾊﾞﾝﾄﾞ	2	
10	224G5-42061		CLIP,RESERVE-TANK	ｸﾘｯﾌﾟ	1	
11	01183-06010		BOLT	ﾎﾞﾙﾄ	1	
12	22N55-42141		BRACKET	ﾌﾞﾗｹｯﾄ	1	
13	01185-08016		BOLT	ﾎﾞﾙﾄ	1	
14	04913-11100		BAND	ﾊﾞﾝﾄﾞ	1	
15	01100-10030		BOLT	ﾎﾞﾙﾄ	1	A:111-
						B:127-
16	02010-00010		WASHER	ﾜｯｼｬ	1	A:111-
						B:127-

FIG.132 FOOT PEDAL CYLINDER (OIL CLUTCH)

(F7035460) ﾌｯﾄﾍﾟﾀﾞﾙｼﾘﾝﾀﾞ

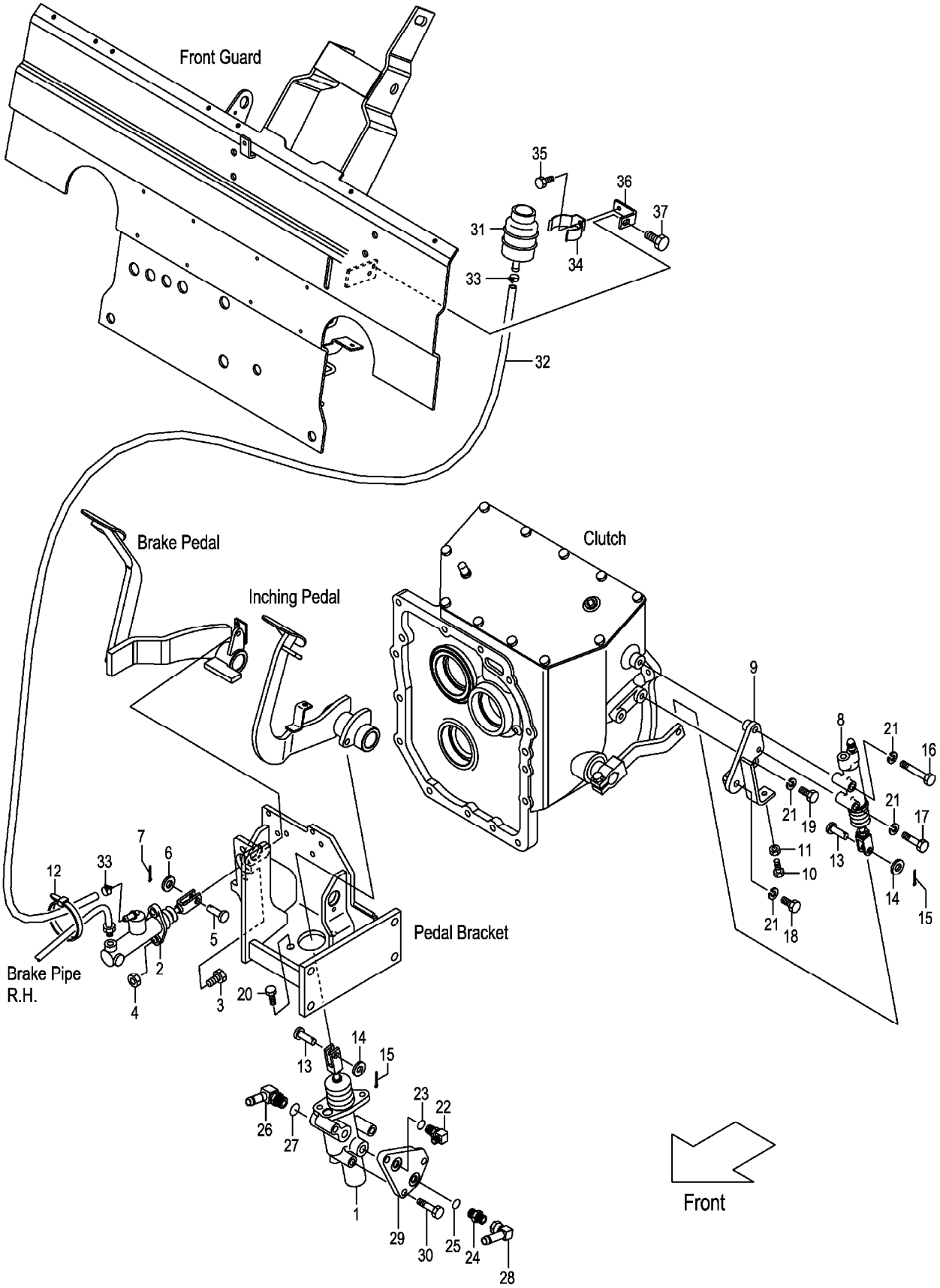

A:FG30W3
B:FD30W3

Item No	Part No.	Mark	Description		Req'd	Remarks : Serial No.
1	224W5-30202		CYL,CLUTCH-MASTER	ｼﾘﾝﾀﾞ	1	SEE FIG.138
2	27045-40302		CYL,BRAKE-MASTER	ｼﾘﾝﾀﾞ	1	SEE FIG.139
3	01184-10030		BOLT	ﾎﾞﾙﾄ	2	
4	01400-00010		NUT	ﾅｯﾄ	2	
5	02262-08025		PIN,CLEVIS	ﾋﾟﾝ	1	
6	02000-00008		WASHER	ﾜｯｼｬ	1	
7	02200-02020		PIN,COTTER	ﾋﾟﾝ	1	
8	522A2-10401		CYL,CLUTCH-RELEASE	ｼﾘﾝﾀﾞ	1	SEE FIG.141
9	22P45-30151		BRACKET,RELEASE-CYL	ﾌﾞﾗｹｯﾄ	1	
10	01100-10025		BOLT	ﾎﾞﾙﾄ	1	
11	01402-00010		NUT	ﾅｯﾄ	1	
12	04913-11100		BAND	ﾊﾞﾝﾄﾞ	1	
13	02262-10030		PIN,CLEVIS	ﾋﾟﾝ	2	
14	02000-00010		WASHER	ﾜｯｼｬ	2	
15	02200-32020		PIN,COTTER	ﾋﾟﾝ	2	
16	01103-10075		BOLT	ﾎﾞﾙﾄ	1	
17	01103-10050		BOLT	ﾎﾞﾙﾄ	1	
18	01103-10035		BOLT	ﾎﾞﾙﾄ	1	
19	01103-10025		BOLT	ﾎﾞﾙﾄ	1	
20	01184-10025		BOLT	ﾎﾞﾙﾄ	2	
21	02010-00010		WASHER	ﾜｯｼｬ	4	
A1	04150-20202		ELBOW-ASSY	ｴﾙﾎﾞｱｯｾﾝ	1	INC.22,23
22	NO PART NO.	#	ELBOW	ｴﾙﾎﾞ	1	
23	03320-00110		O-RING	Oﾘﾝｸﾞ	1	
A2	04134-20202		NIPPLE-ASSY	ﾆｯﾌﾟﾙｱｯｾﾝ	1	INC.24,25
24	NO PART NO.	#	NIPPLE	ﾆｯﾌﾟﾙ	1	
25	03320-00110		O-RING	Oﾘﾝｸﾞ	1	
A3	224W7-60311		FITTING-ASSY,HOSE	ﾎｰｽﾌｨｯﾃｨﾝｸﾞｱｯｾﾝ	1	INC.26,27
26	NO PART NO.	#	FITTING,HOSE	ﾌｨｯﾃｨﾝｸﾞ	1	
27	89140-00006		O-RING	Oﾘﾝｸﾞ	1	
28	209P7-62151		FITTING,HOSE	ﾌｨｯﾃｨﾝｸﾞ	1	
29	22P45-42201		PLATE,ADAPTER	ﾌﾟﾚｰﾄ	1	
30	01184-10055		BOLT	ﾎﾞﾙﾄ	3	
31	23775-42101		TANK,RESERVE	ﾀﾝｸ	1	
32	22655-42591		HOSE,RESERVE	ﾎｰｽ	1	A B:1-232 (-2005.3.6)
-	272E5-42402		HOSE,RESERVE	ﾎｰｽ	1	A B:233- (2005.3.7-)
33	25595-42491		CLIP,HOSE	ｸﾘｯﾌﾟ	2	
34	224G5-42061		CLIP,RESERVE-TANK	ｸﾘｯﾌﾟ	1	
35	01183-06010		BOLT	ﾎﾞﾙﾄ	1	
36	22N55-42141		BRACKET	ﾌﾞﾗｹｯﾄ	1	
37	01185-08016		BOLT	ﾎﾞﾙﾄ	1	

FIG.133 BRAKE PIPE (CLUTCH)

(F7035490) ﾌﾞﾚｰｷﾊﾟｲﾌﾟ

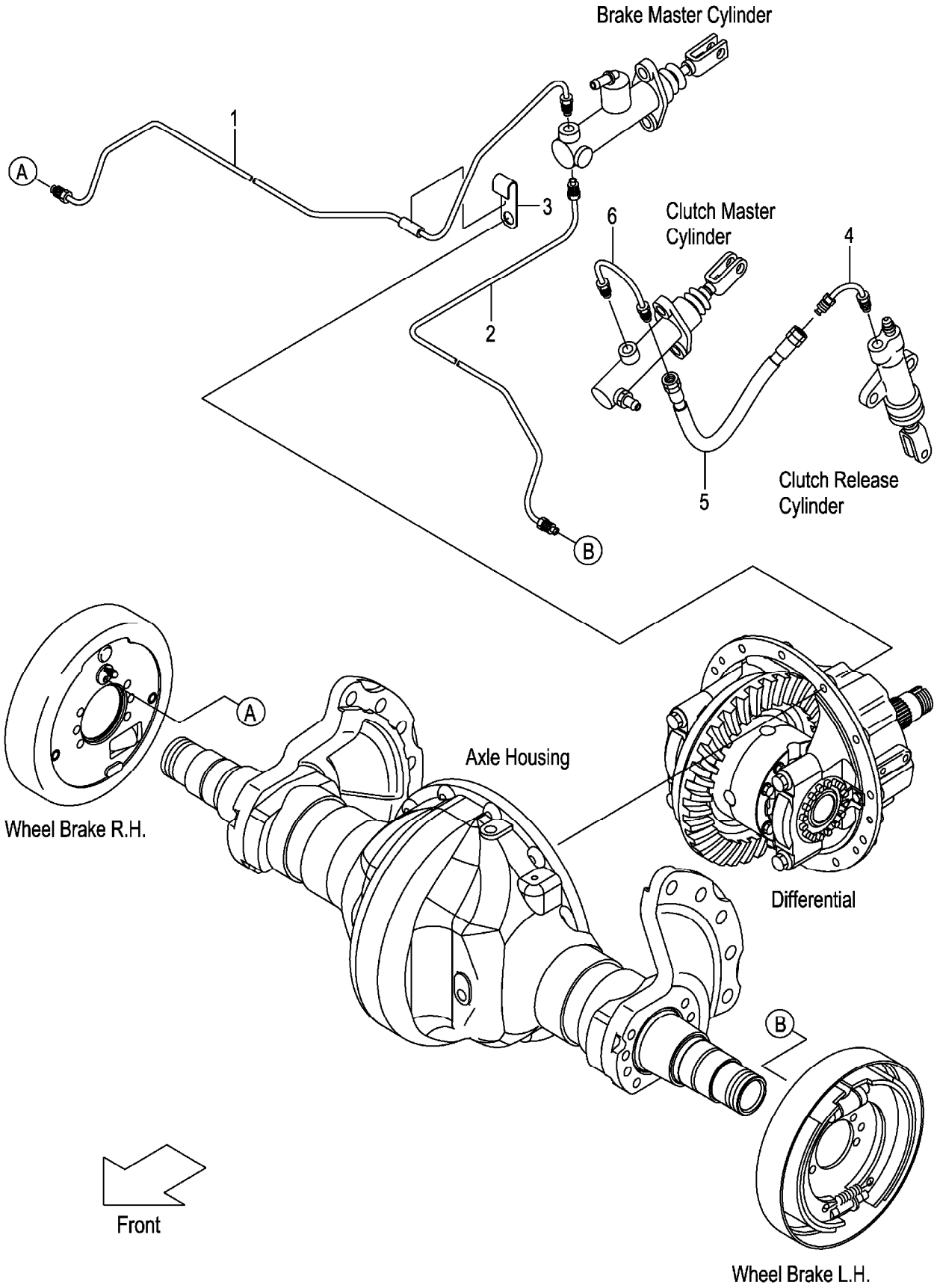

A:FG30C3
B:FD30C3

Item No	Part No.	Mark	Description		Req'd	Remarks : Serial No.
1	22N85-42301		PIPE,BRAKE,RH	ﾊﾟｲﾌﾟ	1	
2	22N85-42401		PIPE,BRAKE,LH	ﾊﾟｲﾌﾟ	1	
3	22N55-42171		CLIP,PIPE	ｸﾘｯﾌﾟ	1	
4	239A5-42471		PIPE,CLUTCH-MASTER	ﾊﾟｲﾌﾟ	1	
5	240A5-42411		HOSE,BRAKE	ﾎｰｽ	1	A:1-110
						B:1-126
-	22N45-42131		HOSE,BRAKE	ﾎｰｽ	1	A:111-
						B:127-
6	22N45-32101		PIPE,MASTER-CYL	ﾊﾟｲﾌﾟ	1	

FIG.134 BRAKE PIPE (TOR-CON)

(F70354A0) ﾌﾞﾚｰｷﾊﾟｲﾌﾟ

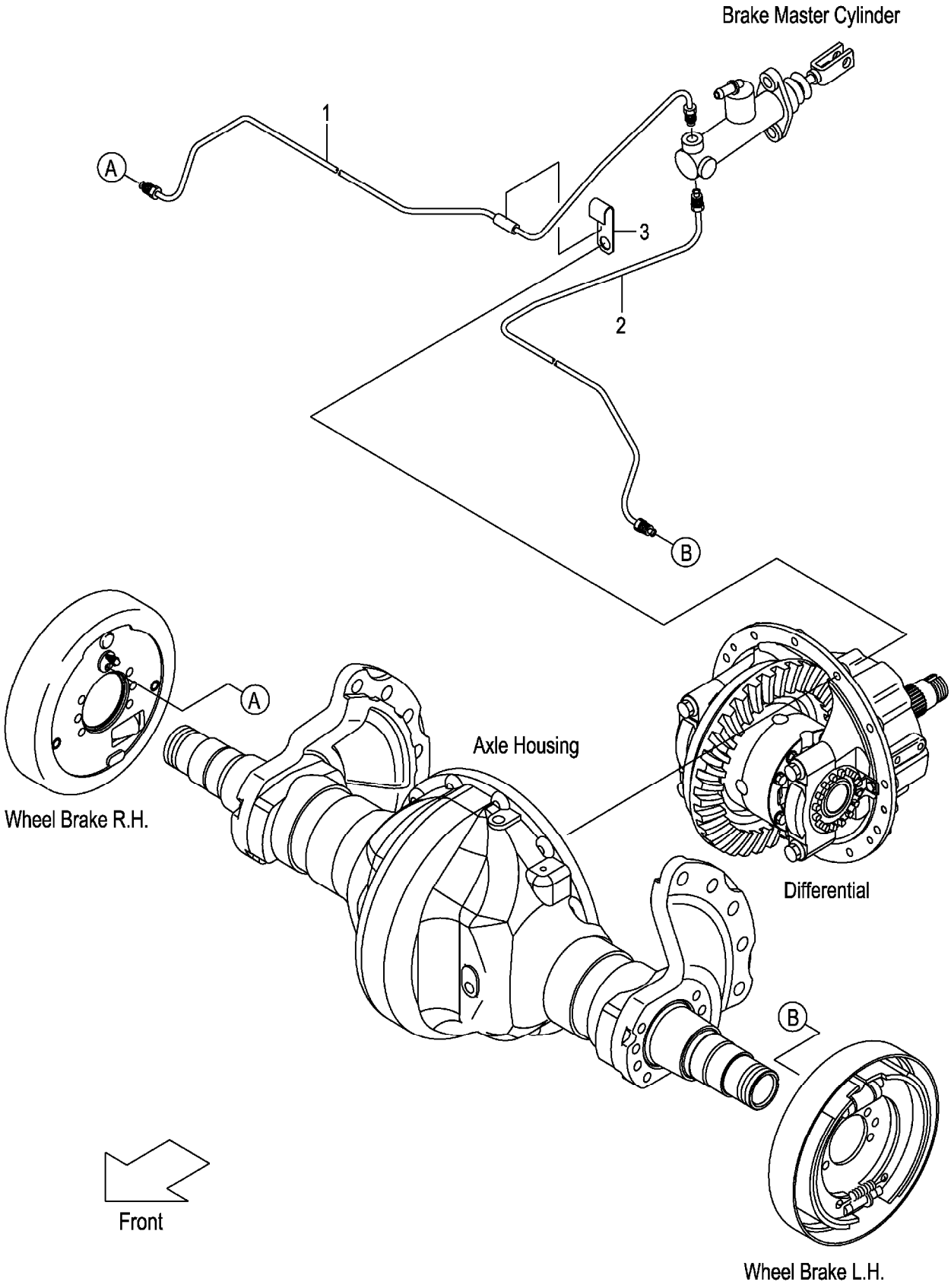

A:FG30T3
B:FD30T3

Item No	Part No.	Mark	Description	Req'd	Remarks : Serial No.
1	22N95-42302		PIPE,BRAKE,RH ﾊﾟｲﾌﾟ	1	
2	22N95-42402		PIPE,BRAKE,LH ﾊﾟｲﾌﾟ	1	
3	22N55-42171		CLIP,PIPE ｸﾘｯﾌﾟ	1	

FIG.135 BRAKE PIPE (OIL CLUTCH)

(F70354B0) ﾌﾞﾚｰｷﾊﾟｲﾌﾟ

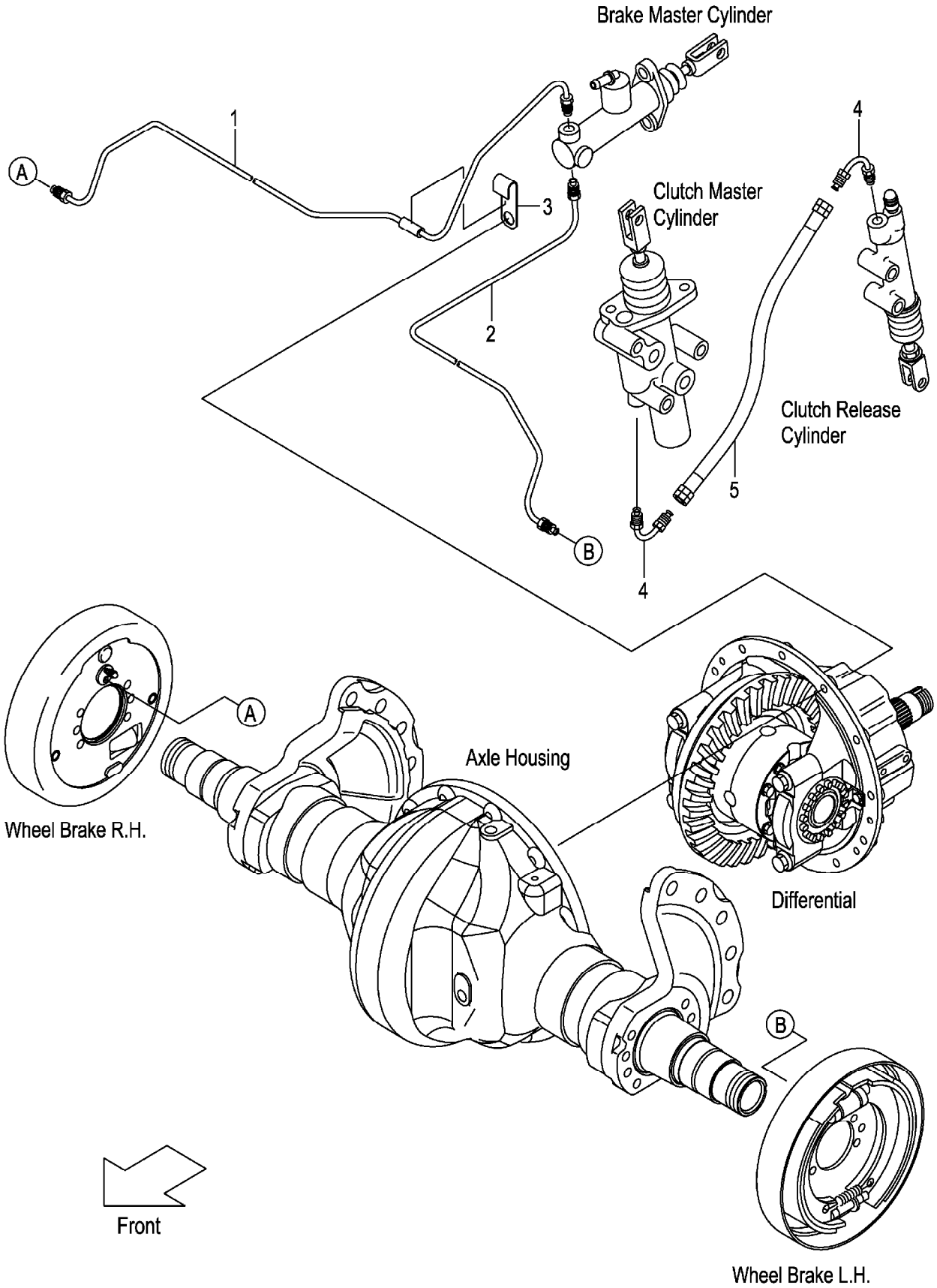

A:FG30W3
B:FD30W3

Item No	Part No.	Mark	Description		Req'd	Remarks : Serial No.
1	22N85-42301		PIPE,BRAKE,RH	ﾊﾟｲﾌﾟ	1	
2	22N85-42401		PIPE,BRAKE,LH	ﾊﾟｲﾌﾟ	1	
3	22N55-42171		CLIP,PIPE	ｸﾘｯﾌﾟ	1	
4	239A5-42471		PIPE,CLUTCH-MASTER	ﾊﾟｲﾌﾟ	2	
5	240A5-42411		HOSE,BRAKE	ﾎｰｽ	1	

FIG.136 FOOT PEDAL PARTS

(F70354E0) フットペダルパーツ

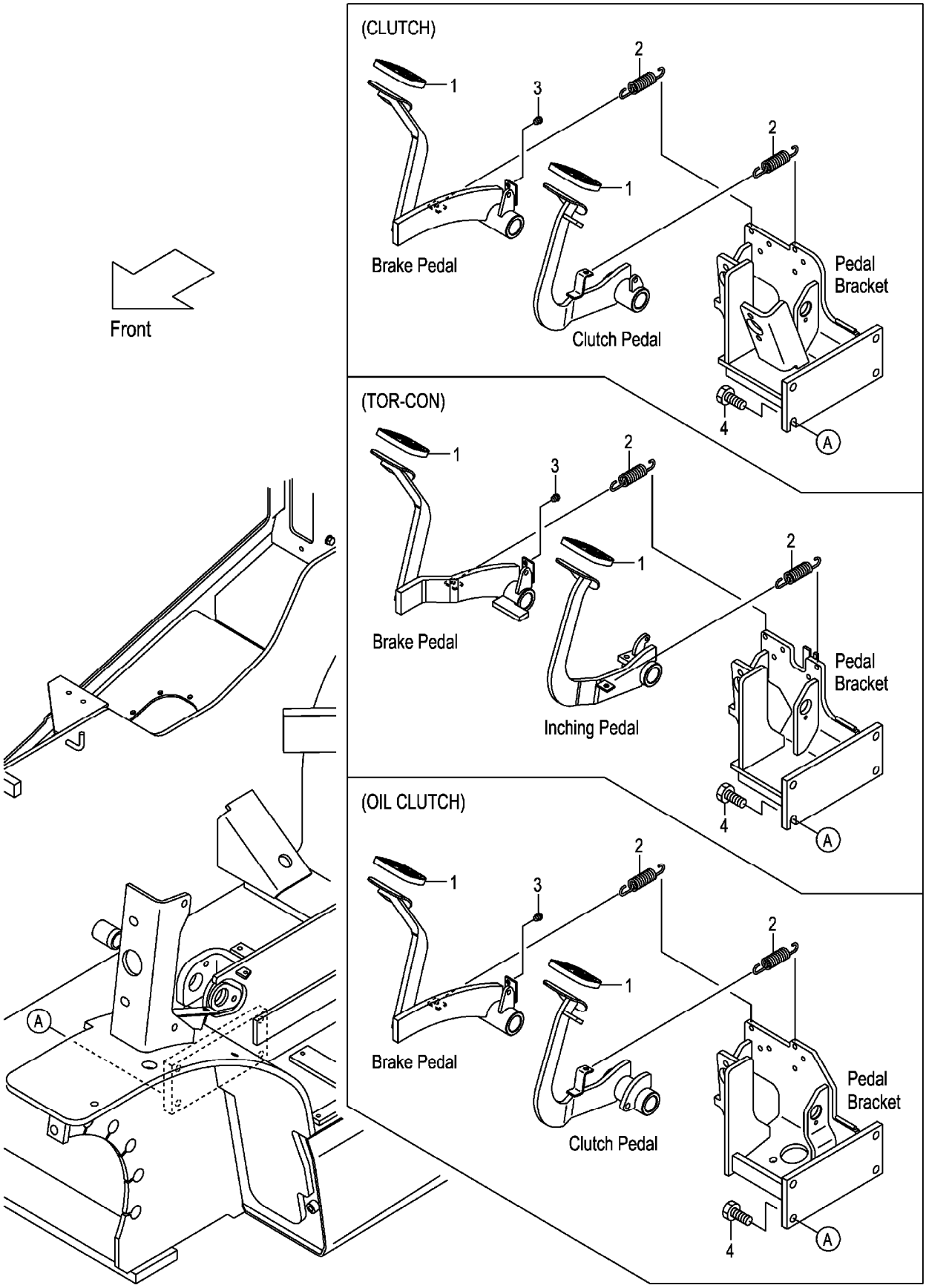

A:FG30C3 FG30T3 FG30W3
B:FD30C3 FD30T3 FD30W3

Item No	Part No.	Mark	Description		Req'd	Remarks : Serial No.
1	239A5-42301		COVER,HEAD	ｶﾊﾞｰ	2	
2	24235-42091		SPRING	ｽﾌﾟﾘﾝｸﾞ	2	
3	23235-40091		RUBBER	ﾗﾊﾞｰ	1	
4	01184-12030		BOLT	ﾎﾞﾙﾄ	4	

FIG.137 CLUTCH MASTER CYLINDER (CLUTCH)

(F70354K0) クラッチマスタシリンダ

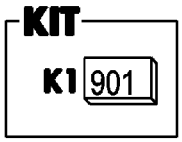

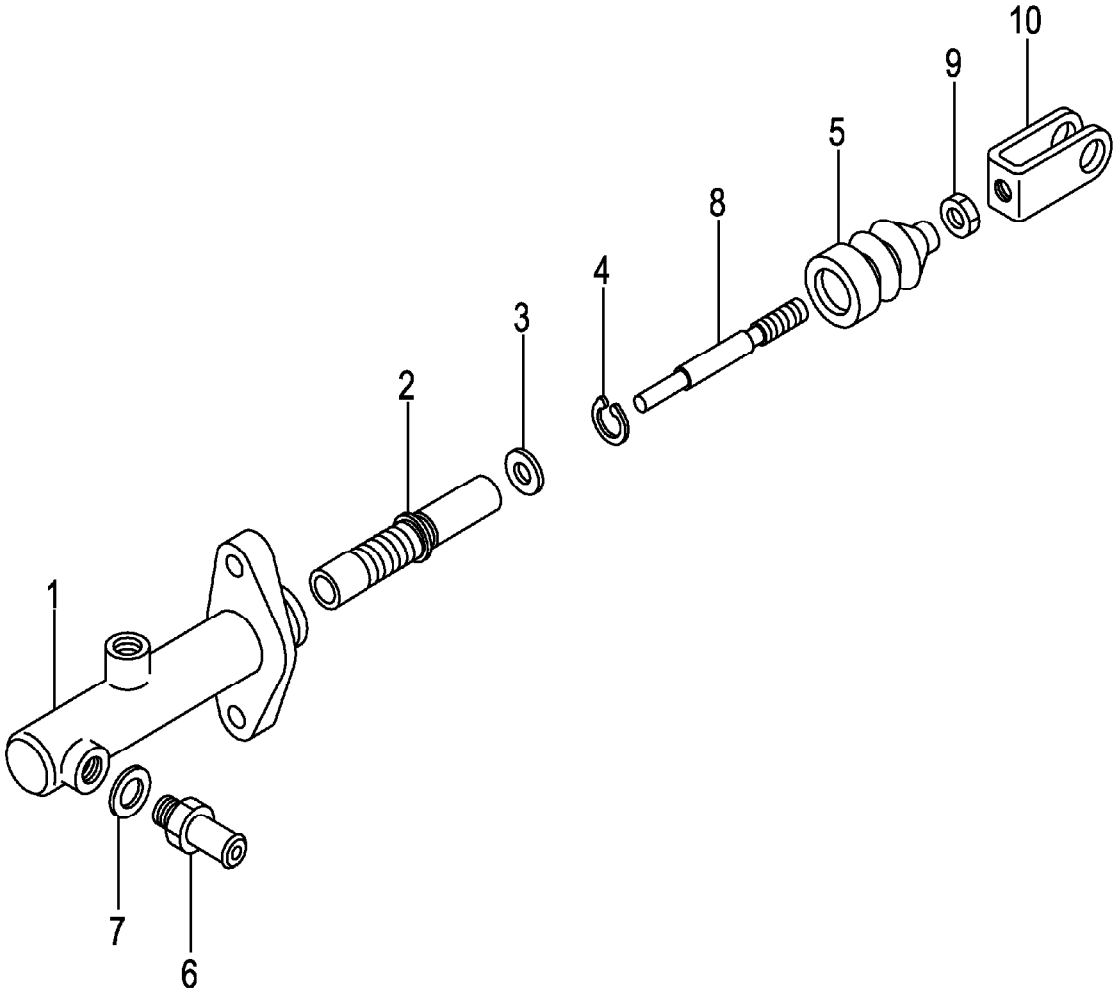

A:FG30C3
B:FD30C3

Item No	Part No.	Mark	Description		Req'd	Remarks : Serial No.
A1	239A5-40501		CYL-ASS'Y,CLUTCH-MASTER	クラッチマスタシリンダアッセン	1	INC.1-10
901	216G5-32201	K1	KIT,REPAIR	リペアキット	1	INC.2-5
1	NO PART NO.	#	BODY,CYL	ボディ	1	
2	NO PART NO.	#*	PISTON	ピストン	1	
3	NO PART NO.	#*	PLATE,PISTON-STOPPER	プレート	1	
4	NO PART NO.	#*	RING,SNAP	スナップリング	1	
5	NO PART NO.	#*	BOOT	ブーツ	1	
6	216G5-32331		UNION	ユニオン	1	
7	216G5-32341		GASKET	ガスケット	1	
8	NO PART NO.	#	ROD,PUSH	ロッド	1	
9	01402-00008		NUT	ナット	1	
10	25595-42452		CLEVIS	クレビス	1	

FIG.138 CLUTCH MASTER CYLINDER (OIL CLUTCH)

(F70354L0) クラッチマスタシリンダ

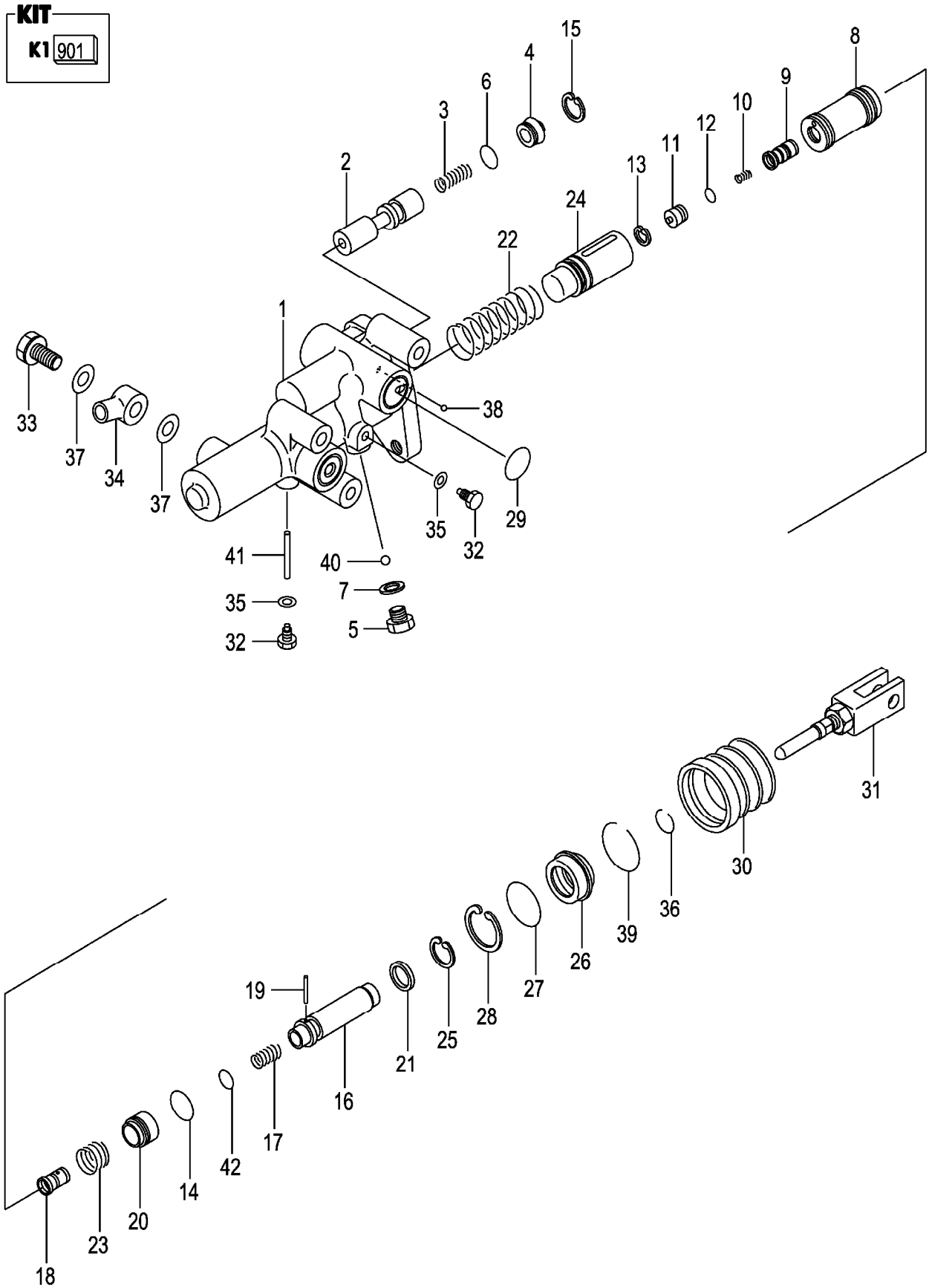

A:FG30W3
B:FD30W3

Item No	Part No.	Mark	Description		Req'd	Remarks : Serial No.
A1	224W5-30202		CYL-ASS'Y,CLUTCH-MASTER	クラッチマスタシリンダアッセン	1	INC.1-42
901	224W5-32501	K1	KIT,OVERHAUL	オーバホールキット	1	INC.6-8,12-15,19,24-30,35-42
1	NO PART NO.	#	BODY,BOOSTER	ボディ	1	
2	224W5-32511		SPOOL,FLOW-DIVIDER	スプール	1	
3	522A2-18011		SPRING,FLOW-DIVIDER	スプリング	1	
4	522A2-18021		PLUG	プラグ	1	
5	522A2-18041		PLUG	プラグ	1	
6	522A2-18031	*	O-RING	Oリング	1	
7	522A2-18051	*	GASKET	ガスケット	1	
8	224W5-32401	*	PISTON,POWER	ピストン	1	
9	522A2-18071		VALVE,CONTROL	バルブ	1	
10	522A2-18081		SPRING,CONTROL-VALVE	スプリング	1	
11	522A2-18091		PLUG,PISTON	プラグ	1	
12	522A2-18101	*	O-RING	Oリング	1	
13	522A2-18111	*	RING,SNAP	スナップリング	1	
14	522A2-18121	*	O-RING	Oリング	1	
15	522A2-18131	*	RING,SNAP	スナップリング	1	
16	224W5-42401		PISTON,REACTION	ピストン	1	
17	224W5-32421		SPRING,RELIEF-VALVE	スプリング	1	
18	522A2-18161		SEAT,CONTROL-VALVE	シート	1	
19	522A2-18171	*	PIN	ピン	1	
20	224W5-42431		PISTON,REACTION	ピストン	1	
21	522A2-18201		WASHER	ワッシャ	1	
22	224W5-32551		SPRING,RETURN,PISTON	スプリング	1	
23	522A2-18221		SPRING,RETURN,VALVE	スプリング	1	
24	224W5-32441	*	PISTON,MASTER-CYL	ピストン	1	
25	522A2-18211	*	RING,SNAP	スナップリング	1	
26	224W5-32521	*	GUIDE,REACTION	ガイド	1	
27	224W5-32451	*	O-RING	Oリング	1	
28	224W5-32461	*	RING,SNAP	スナップリング	1	
29	522A2-18281	*	O-RING	Oリング	2	
30	224W5-32471	*	BOOT	ブーツ	1	
31	522A2-18301		ROD,PUSH	ロッド	1	
32	522A2-18311		BOLT	ボルト	2	
33	522A2-18341		BOLT,UNION	ボルト	1	
34	522A2-18352		UNION	ユニオン	1	
35	522A2-18321	*	GASKET	ガスケット	2	
36	522A2-18331	*	RING,SNAP	スナップリング	1	
37	522A2-18361	*	GASKET	ガスケット	2	
38	522A2-18371	*	BALL	ボール	1	
39	224W5-32481	*	RING,SNAP	スナップリング	1	
40	522A2-18391	*	BALL	ボール	1	
41	224W5-32491	*	PIN	ピン	1	
42	55952-18021	*	O-RING	Oリング	1	

FIG.139 BRAKE MASTER CYLINDER

(F70354M0) ﾌﾞﾚｰｷﾏｽﾀｼﾘﾝﾀﾞ

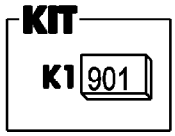

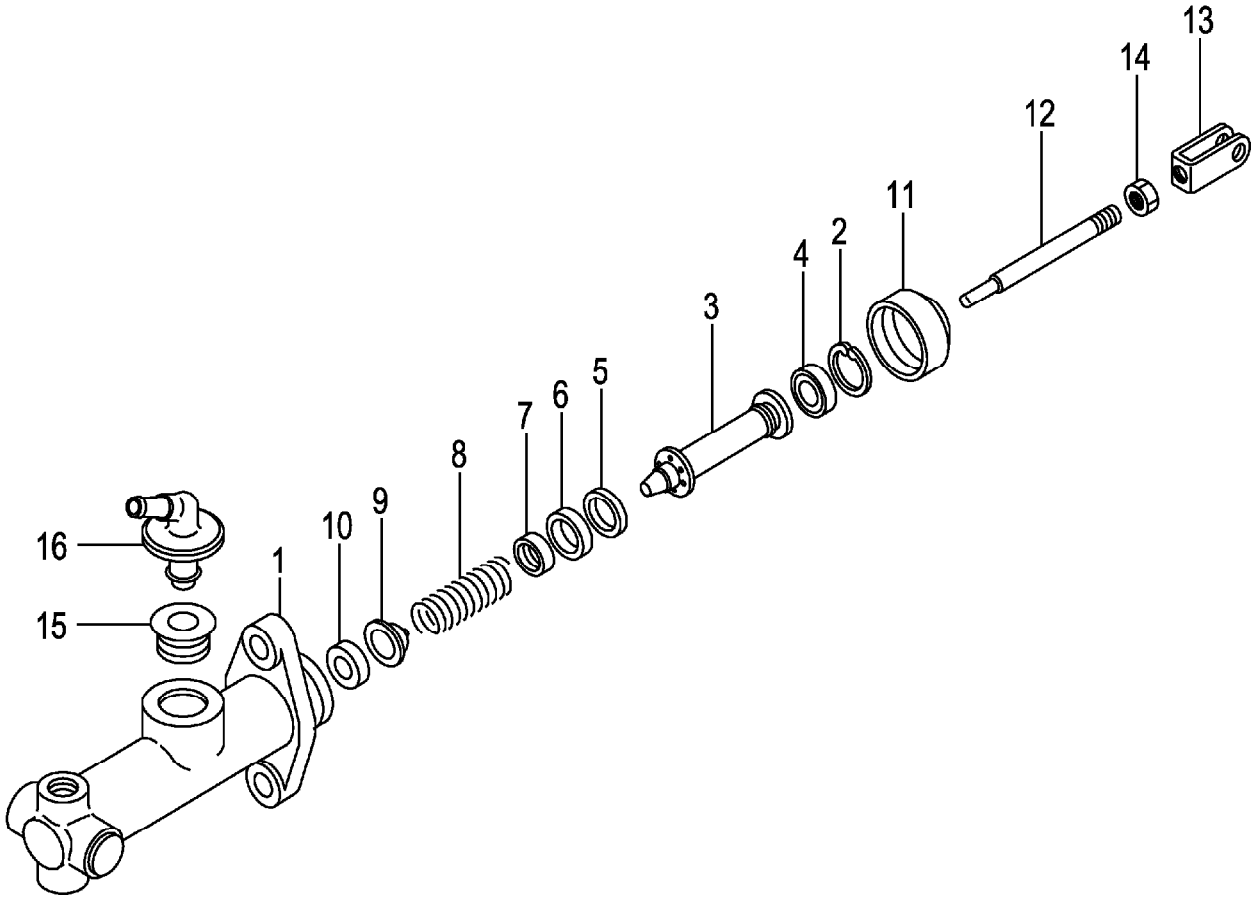

A:FG30C3 FG30T3 FG30W3
B:FD30C3 FD30T3 FD30W3

Item No	Part No.	Mark	Description		Req'd	Remarks : Serial No.
A1	27045-40302		CYL-ASS'Y,BRAKE-MASTER	ﾌﾞﾚｰｷﾏｽﾀｼﾘﾝﾀﾞｱｯｾﾝ	1	INC.1-16
901	25595-42501	K1	KIT,REPAIR	ﾘﾍﾟｱｷｯﾄ	1	INC.2-11
1	NO PART NO.	#	BODY,CYL	ﾎﾞﾃﾞｨ	1	
2	NO PART NO.	#*	RING,SNAP	ｽﾅｯﾌﾟﾘﾝｸﾞ	1	
3	NO PART NO.	#*	PISTON	ﾋﾟｽﾄﾝ	1	
4	NO PART NO.	#*	CAP,SECONDARY	ｷｬｯﾌﾟ	1	
5	NO PART NO.	#*	SPACER	ｽﾍﾟｰｻ	1	
6	NO PART NO.	#*	CAP,PRIMARY	ｷｬｯﾌﾟ	1	
7	NO PART NO.	#*	SEAT,SPRING	ｼｰﾄ	1	
8	NO PART NO.	#*	SPRING	ｽﾌﾟﾘﾝｸﾞ	1	
9	NO PART NO.	#*	VALVE	ﾊﾞﾙﾌﾞ	1	
10	NO PART NO.	#*	SEAT,VALVE	ｼｰﾄ	1	
11	NO PART NO.	#*	BOOT	ﾌﾞｰﾂ	1	
A2	25595-42482		ROD-ASSY,PUSH	ﾌﾟｯｼｭﾛｯﾄﾞｱｯｾﾝ	1	INC.12-14
12	NO PART NO.	#	ROD,PUSH	ﾛｯﾄﾞ	1	
13	25595-42452		CLEVIS	ｸﾚﾋﾞｽ	1	
14	01402-00008		NUT	ﾅｯﾄ	1	
15	25595-42421		BUSHING	ﾌﾞｯｼﾝｸﾞ	1	
16	25595-42411		UNION,FILLER	ﾕﾆｵﾝ	1	

FIG.140 CLUTCH RELEASE CYLINDER (CLUTCH)

(F70354P0) クラッチリリースシリンダ

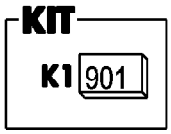

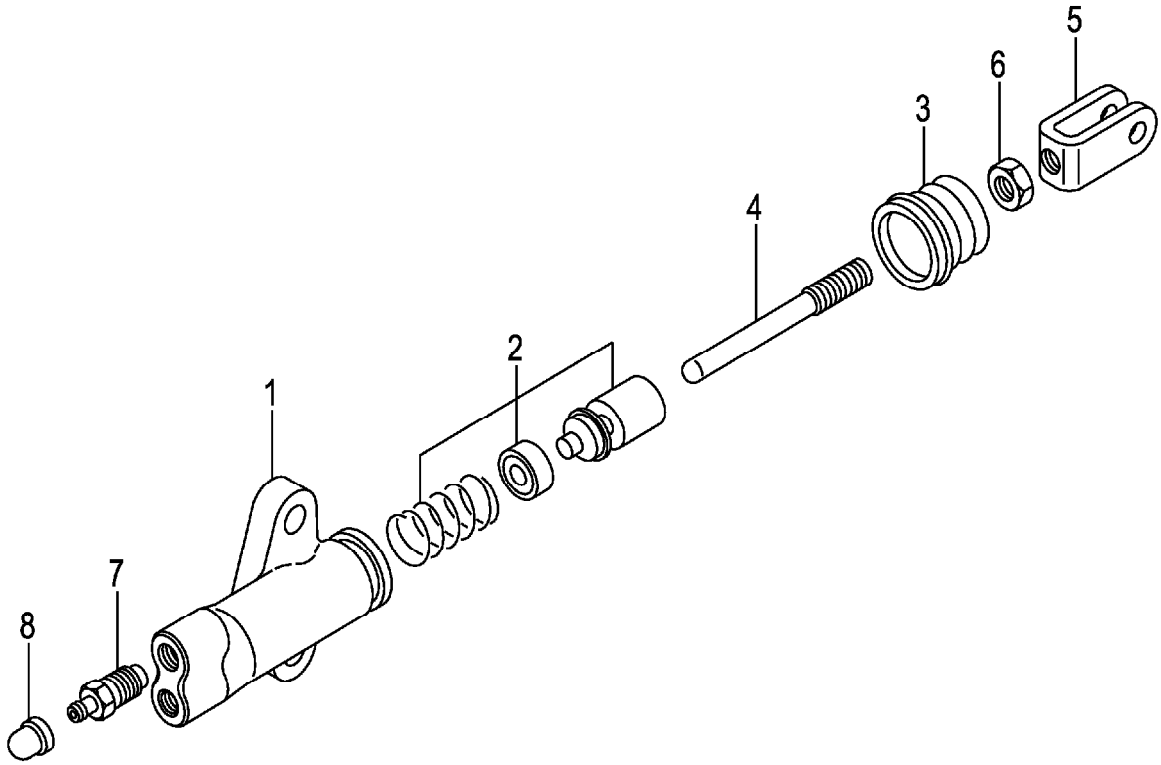

A:FG30C3
B:FD30C3

Item No	Part No.	Mark	Description		Req'd	Remarks : Serial No.
A1	214A5-32312		CYL-ASS'Y,CLUTCH-RELEASE	クラッチリリースシリンダアッセン	1	INC.1-8
901	214A5-33012	K1	KIT,REPAIR	リペアキット	1	INC.2,3
1	NO PART NO.	#	BODY,CYL	ボディ	1	
2	NO PART NO.	#*	PISTON	ピストン	1	
3	NO PART NO.	#*	BOOT	ブーツ	1	
A2	214A5-33052		ROD-ASSY,PUSH	プッシュロッドアッセン	1	INC.4-6
4	214A5-33062		ROD,PUSH	ロッド	1	
5	25595-42452		CLEVIS	クレビス	1	
6	01402-00008		NUT	ナット	1	
7	214A5-33031		VALVE,BLEEDER	バルブ	1	
8	214A5-33041		CAP,BLEEDER	キャップ	1	

FIG.141 CLUTCH RELEASE CYLINDER (OIL CLUTCH)

(F70354Q0) クラッチリリースシリンダ

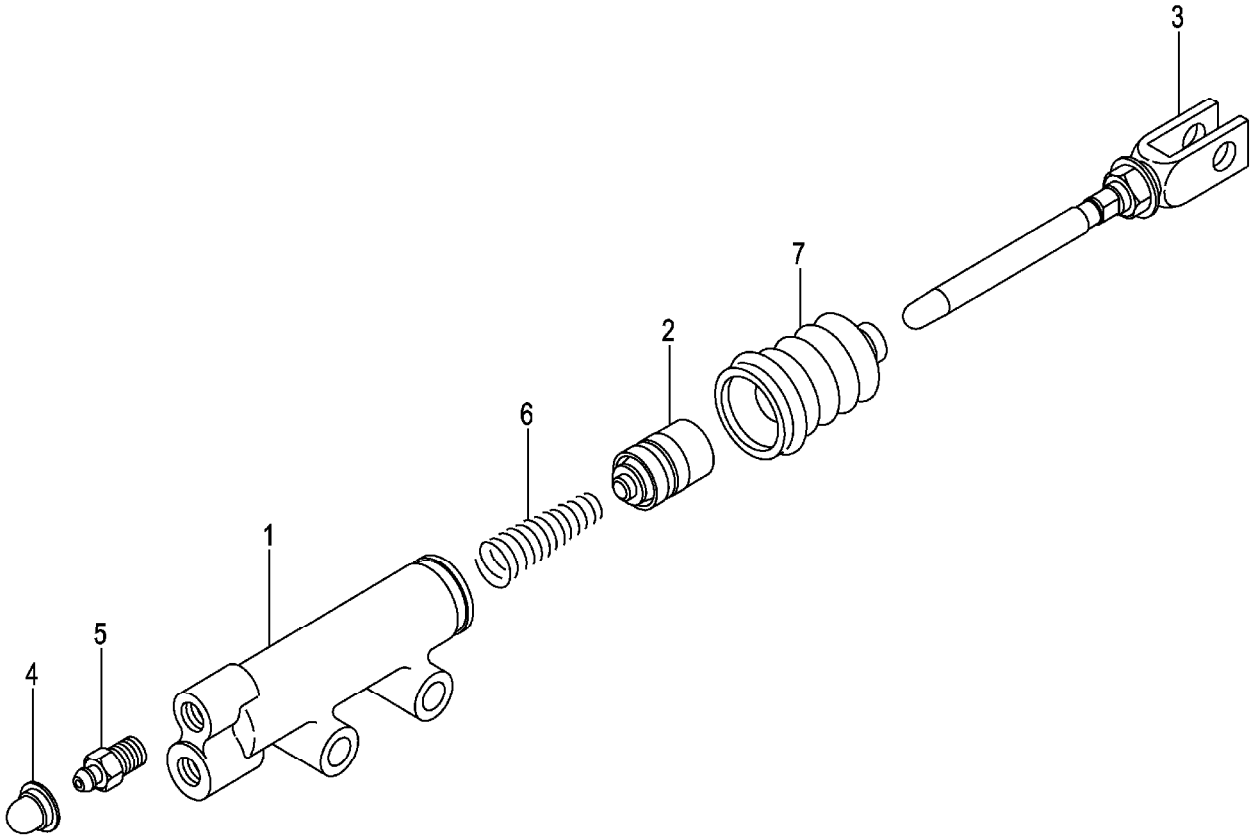

A:FG30W3
B:FD30W3

Item No	Part No.	Mark	Description		Req'd	Remarks : Serial No.
A1	522A2-10401		CYL-ASSY,RELEASE	ﾘﾘｰｽｼﾘﾝﾀﾞｱｯｾﾝ	1	INC.1-7
901	522A2-11601	K1	KIT,OVERHAUL	ｵｰﾊﾞﾎｰﾙｷｯﾄ	1	INC.2,4,6,7
1	NO PART NO.	#	BODY,CYL	ﾎﾞﾃﾞｨ	1	
2	522A2-18541	*	PISTON,RELEASE-CYL	ﾋﾟｽﾄﾝ	1	
3	522A2-18551		ROD,PUSH	ﾛｯﾄﾞ	1	
4	522A2-18561	*	CAP,BLEEDER-PLUG	ｷｬｯﾌﾟ	1	
5	522A2-18571		PLUG,BLEEDER	ﾌﾟﾗｸﾞ	1	
6	522A2-18581	*	SPRING,CONICAL	ｽﾌﾟﾘﾝｸﾞ	1	
7	522A2-18591	*	BOOT	ﾌﾞｰﾂ	1	

FIG.142 BRAKE LEVER

(F7035510) ﾌﾞﾚｰｷﾚﾊﾞｰ

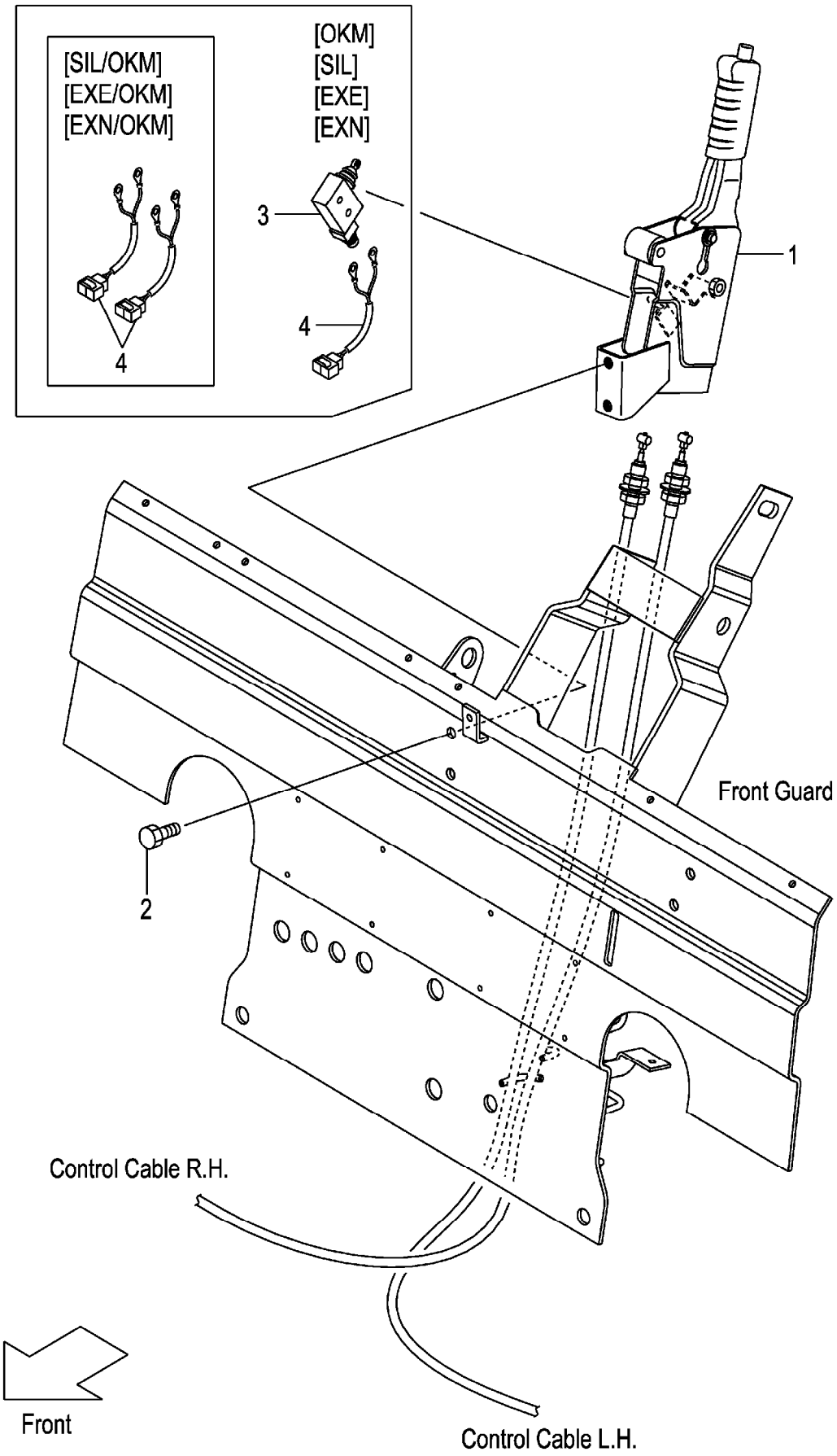

A:FG30C3 FG30T3 C:FD30C3 FD30T3
B:FG30W3 D:FD30W3

Item No	Part No.	Mark	Description		Req'd	Remarks : Serial No.
1	22N55-50101		LEVER,PARKING-BRAKE	ﾚﾊﾞｰ	1	
2	01184-10050		BOLT	ﾎﾞﾙﾄ	2	A,B:1-109 C,D:1-101
-	01184-10025		BOLT	ﾎﾞﾙﾄ	2	A,B:110- C,D:102-
3	27912-62441		SWITCH,MICRO	ｽｲｯﾁ	1	[OKM][SIL][SIL/OKM]
-	27912-62441		SWITCH,MICRO	ｽｲｯﾁ	1	A,C [EXE][EXN][EXE/OKM][EXN/OKM]
4	535H3-82261		WIRE-HARNESS,SWITCH	ﾜｲﾔﾊｰﾈｽ	1	A,B:1-109 C,D:1-101 [OKM][SIL]
-	278M2-42061		WIRE-HARNESS,SWITCH	ﾜｲﾔﾊｰﾈｽ	1	A,B:110- C,D:102- [OKM][SIL]
-	535H3-82261		WIRE-HARNESS,SWITCH	ﾜｲﾔﾊｰﾈｽ	1	A:1-109 C:1-101 [EXE][EXN]
-	278M2-42061		WIRE-HARNESS,SWITCH	ﾜｲﾔﾊｰﾈｽ	1	A:110- C:102- [EXE][EXN]
-	278M2-42061		WIRE-HARNESS,SWITCH	ﾜｲﾔﾊｰﾈｽ	2	[SIL/OKM]
-	278M2-42061		WIRE-HARNESS,SWITCH	ﾜｲﾔﾊｰﾈｽ	2	A,C [EXE/OKM][EXN/OKM]

FIG.143 FRAME

(F7036110) フレーム

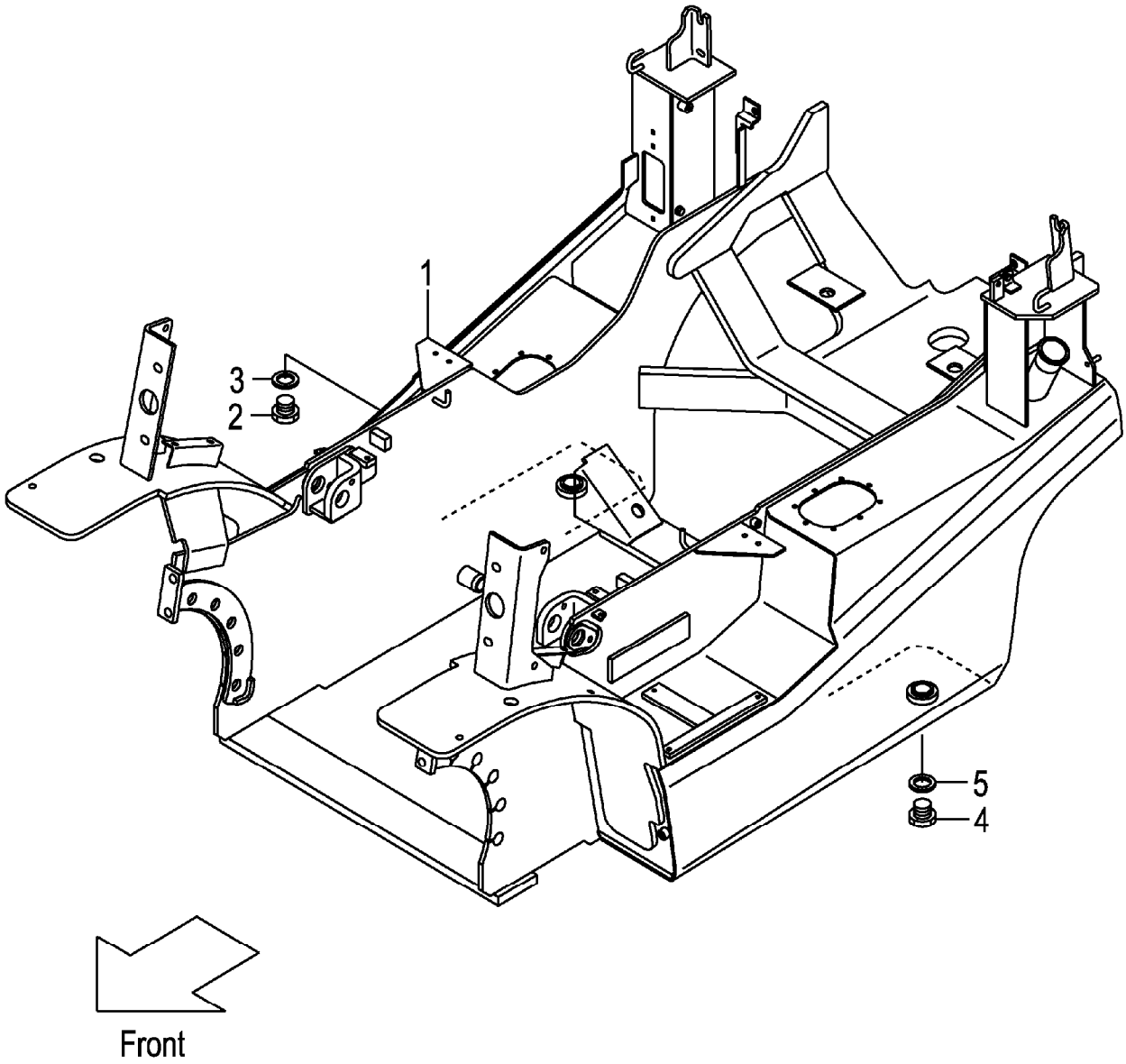

A:FG30C3 FG30T3 FG30W3
B:FD30C3 FD30T3 FD30W3

Item No	Part No.	Mark	Description		Req'd	Remarks : Serial No.
1	NO PART NO.	#	FRAME	ﾌﾚｰﾑ	1	
2	21237-52051		PLUG,DRAIN	ﾌﾟﾗｸﾞ	1	
3	21237-52062		PACKING	ﾊﾟｯｷﾝｸﾞ	1	
4	21237-52051		PLUG,DRAIN	ﾌﾟﾗｸﾞ	1	
5	21237-52062		PACKING	ﾊﾟｯｷﾝｸﾞ	1	

FIG.144 OIL TANK

(F7036120) オイルタンク

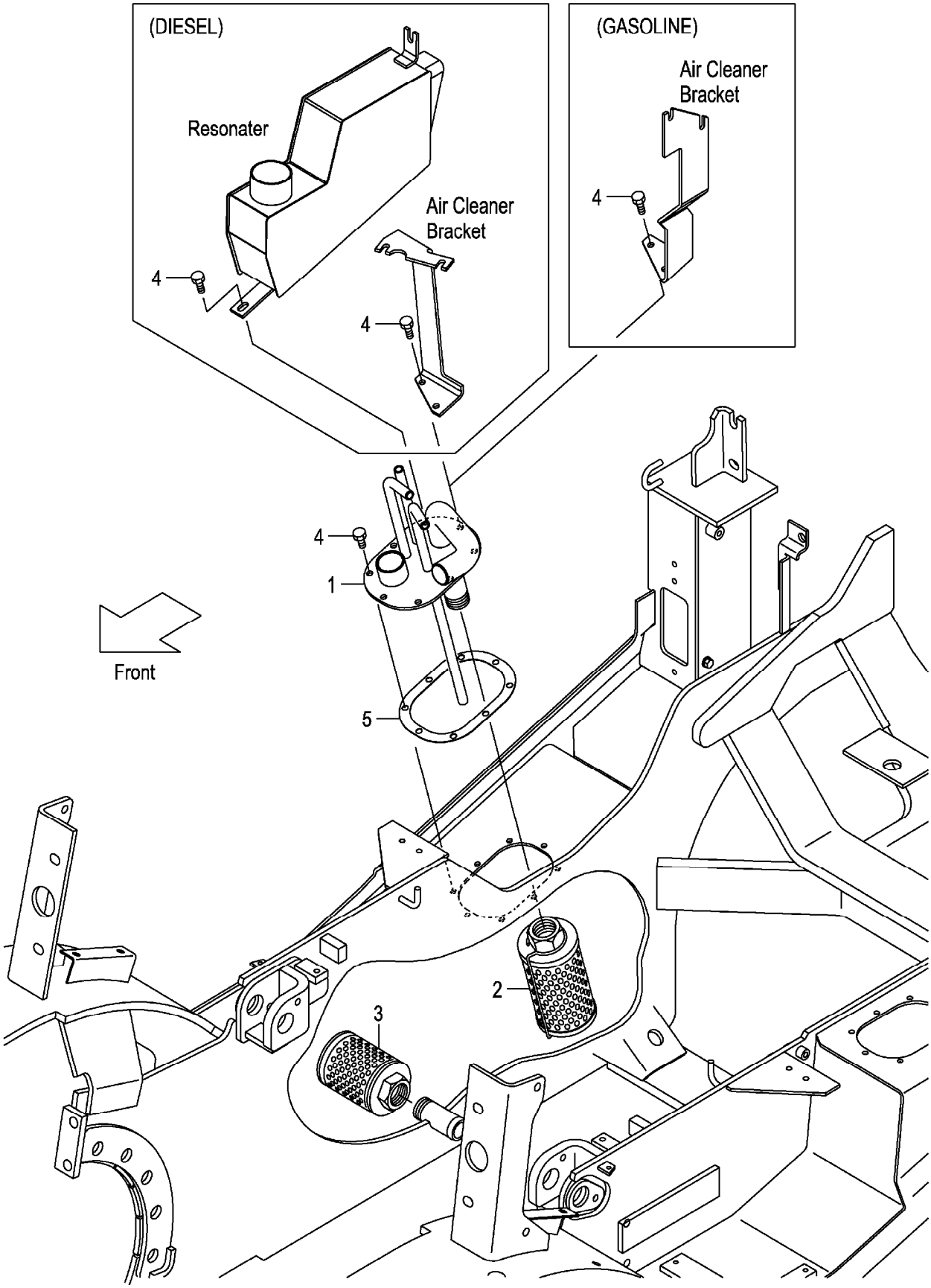

A:FG30C3 FG30T3 FG30W3
B:FD30C3 FD30T3 FD30W3

Item No	Part No.	Mark	Description		Req'd	Remarks : Serial No.
1	22N57-52302		PIPE,RETURN	ﾊﾟｲﾌﾟ	1	
2	271A7-52301		FILTER,RETURN	ﾌｨﾙﾀ	1	
3	216G7-52051		FILTER,SUCTION	ﾌｨﾙﾀ	1	
4	229F2-22151		BOLT	ﾎﾞﾙﾄ	8	
5	22N52-22201		PACKING	ﾊﾟｯｷﾝｸﾞ	1	

FIG.145 OIL CAP & LEVEL

(F7036130) オイルキャップ&レベル

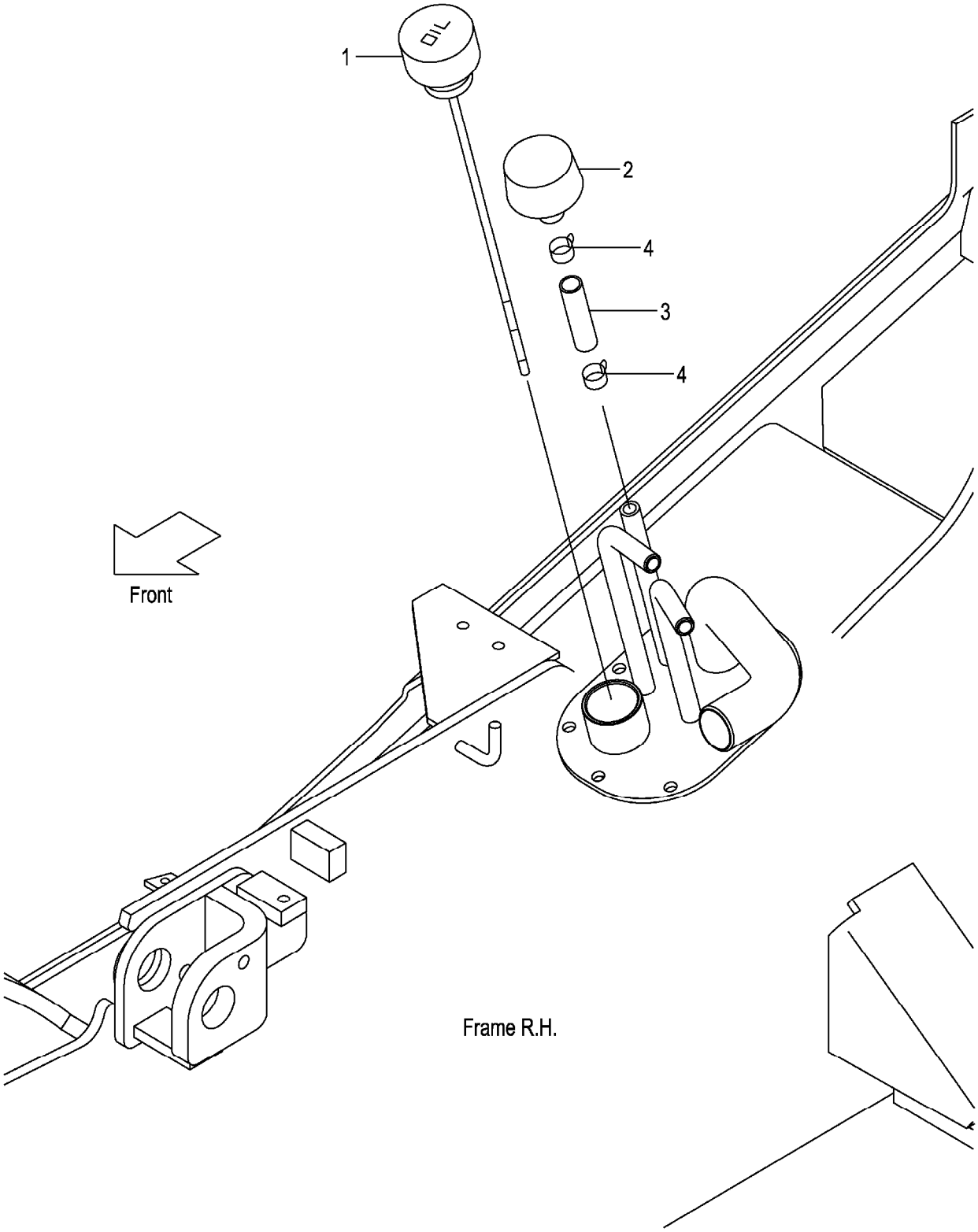

A:FG30C3 FG30T3 FG30W3
B:FD30C3 FD30T3 FD30W3

Item No	Part No.	Mark	Description		Req'd	Remarks : Serial No.
1	22N57-52101		CAP,OIL	ｷｬｯﾌﾟ	1	A:1-124 B:1-225
-	22N57-52102		CAP,OIL	ｷｬｯﾌﾟ	1	A:125- B:226-
2	216G7-52201		CAP,BREATHER	ｷｬｯﾌﾟ	1	
3	04710-04005		HOSE	ﾎｰｽ	1	
4	04914-00019		CLIP	ｸﾘｯﾌﾟ	2	

FIG.146 FUEL TANK (GASOLINE)

(F7036140) フューエルタンク

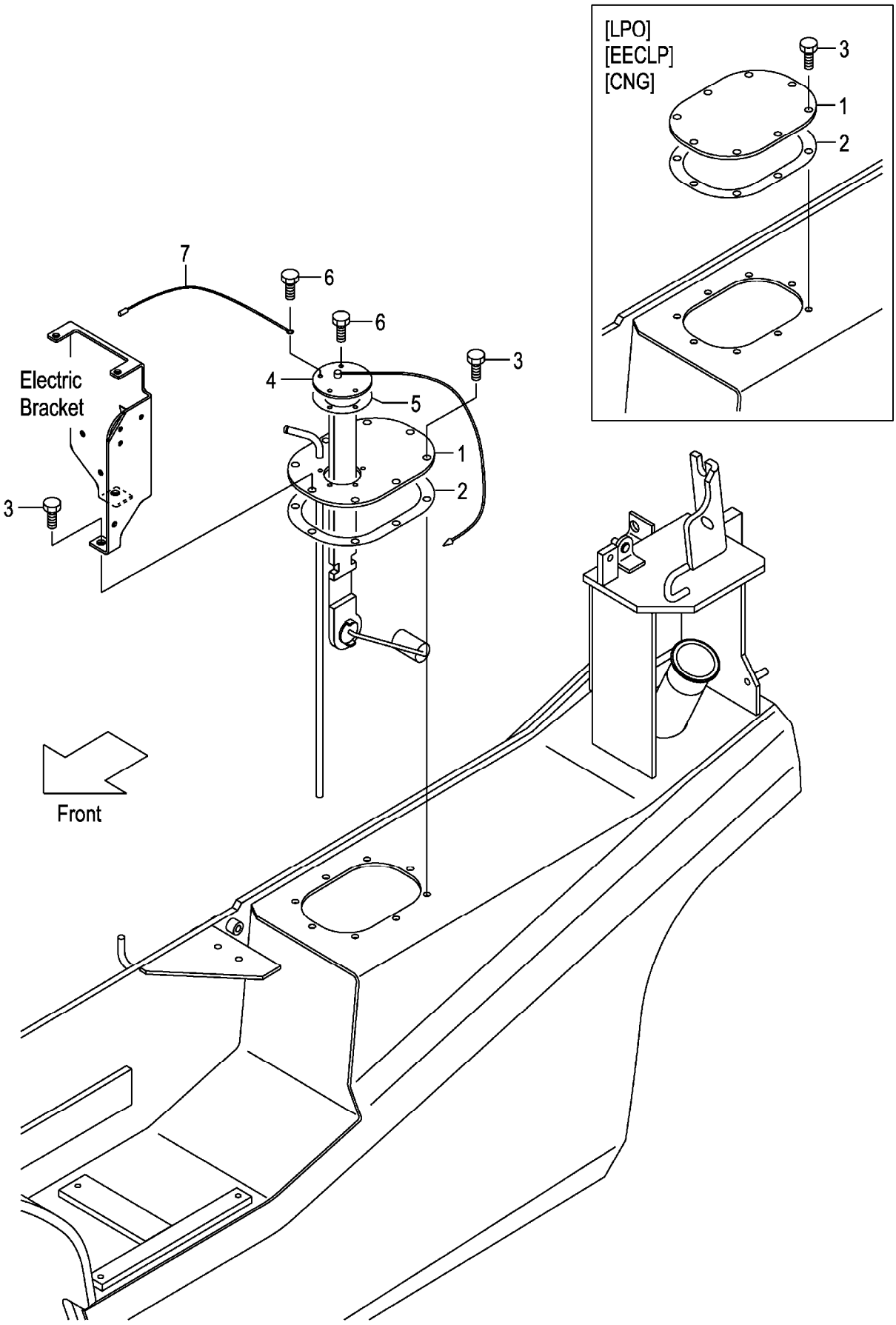

A:FG30C3 FG30T3 FG30W3

Item No	Part No.	Mark	Description		Req'd	Remarks : Serial No.
1	22B52-22101		PLATE,FUEL-TOP	ﾌﾟﾚｰﾄ	1	
-	52E00-53051		PLATE,FUEL-TOP	ﾌﾟﾚｰﾄ	1	[LPO][EECLP][CNG]
2	22N52-22201		PACKING	ﾊﾟｯｷﾝｸﾞ	1	
3	229F2-22151		BOLT	ﾎﾞﾙﾄ	8	
4	222A2-22061		GAUGE,FUEL	ｹﾞｰｼﾞ	1	(WITHOUT LPO,EECLP,CNG)
5	229F2-22071		GASKET	ｶﾞｽｹｯﾄ	1	(WITHOUT LPO,EECLP,CNG)
6	229F2-22171		BOLT	ﾎﾞﾙﾄ	5	(WITHOUT LPO,EECLP,CNG)
7	25592-42121		WIRE	ﾜｲﾔ	1	(WITHOUT LPO,EECLP,CNG)

FIG.147 FUEL TANK (DIESEL)

(F7036150) フューエルタンク

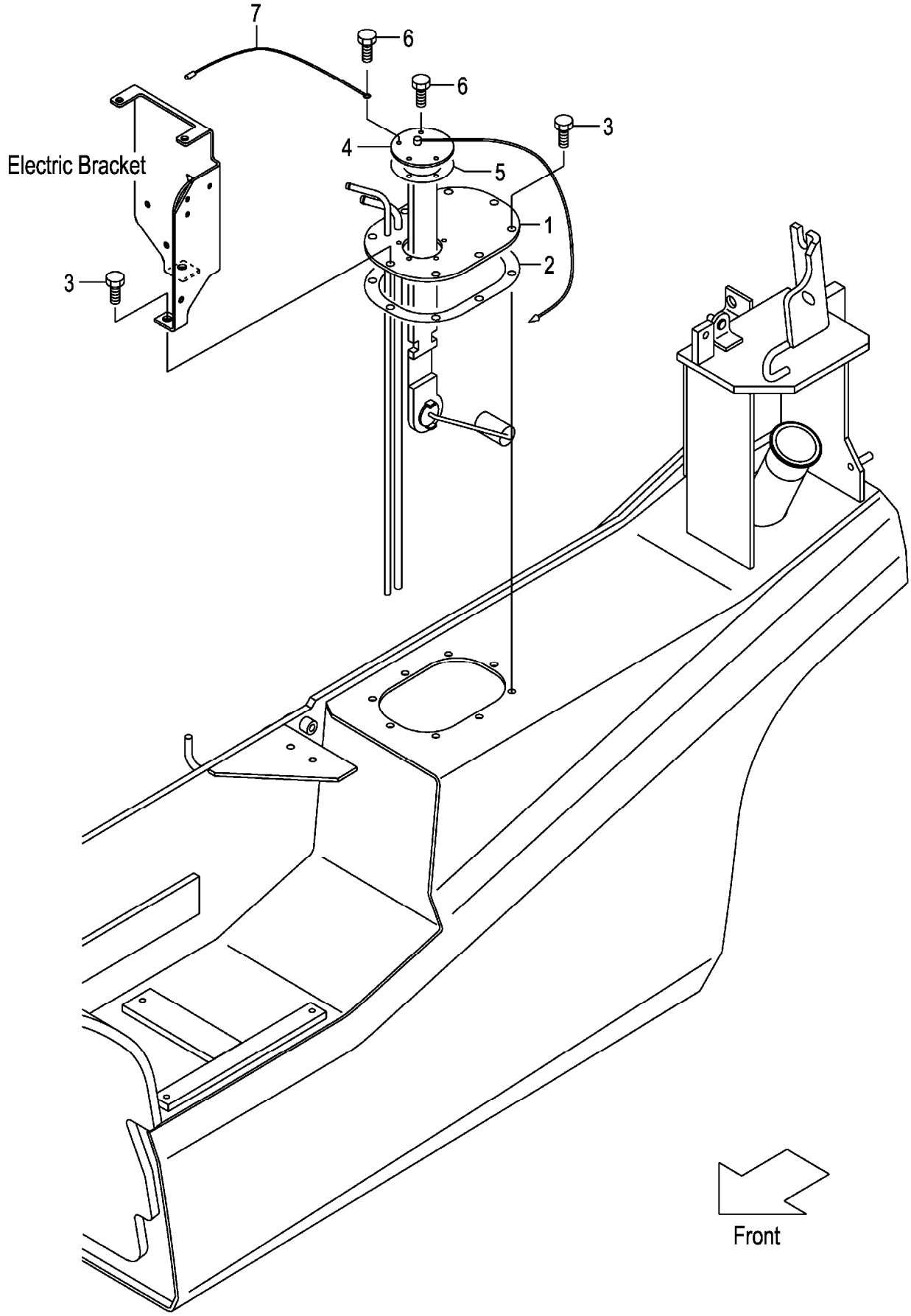

A:FD30C3 FD30T3 FD30W3

Item No	Part No.	Mark	Description		Req'd	Remarks : Serial No.
1	22N52-22101		PLATE,FUEL-TOP	ﾌﾟﾚｰﾄ	1	
2	22N52-22201		PACKING	ﾊﾟｯｷﾝｸﾞ	1	
3	229F2-22151		BOLT	ﾎﾞﾙﾄ	8	
4	222A2-22061		GAUGE,FUEL	ｹﾞｰｼﾞ	1	
5	229F2-22071		GASKET	ｶﾞｽｹｯﾄ	1	
6	229F2-22171		BOLT	ﾎﾞﾙﾄ	5	
7	25592-42121		WIRE	ﾜｲﾔ	1	

FIG.148 BALANCE WEIGHT

(F7036310) ﾊﾞﾗﾝｽｳｴｲﾄ

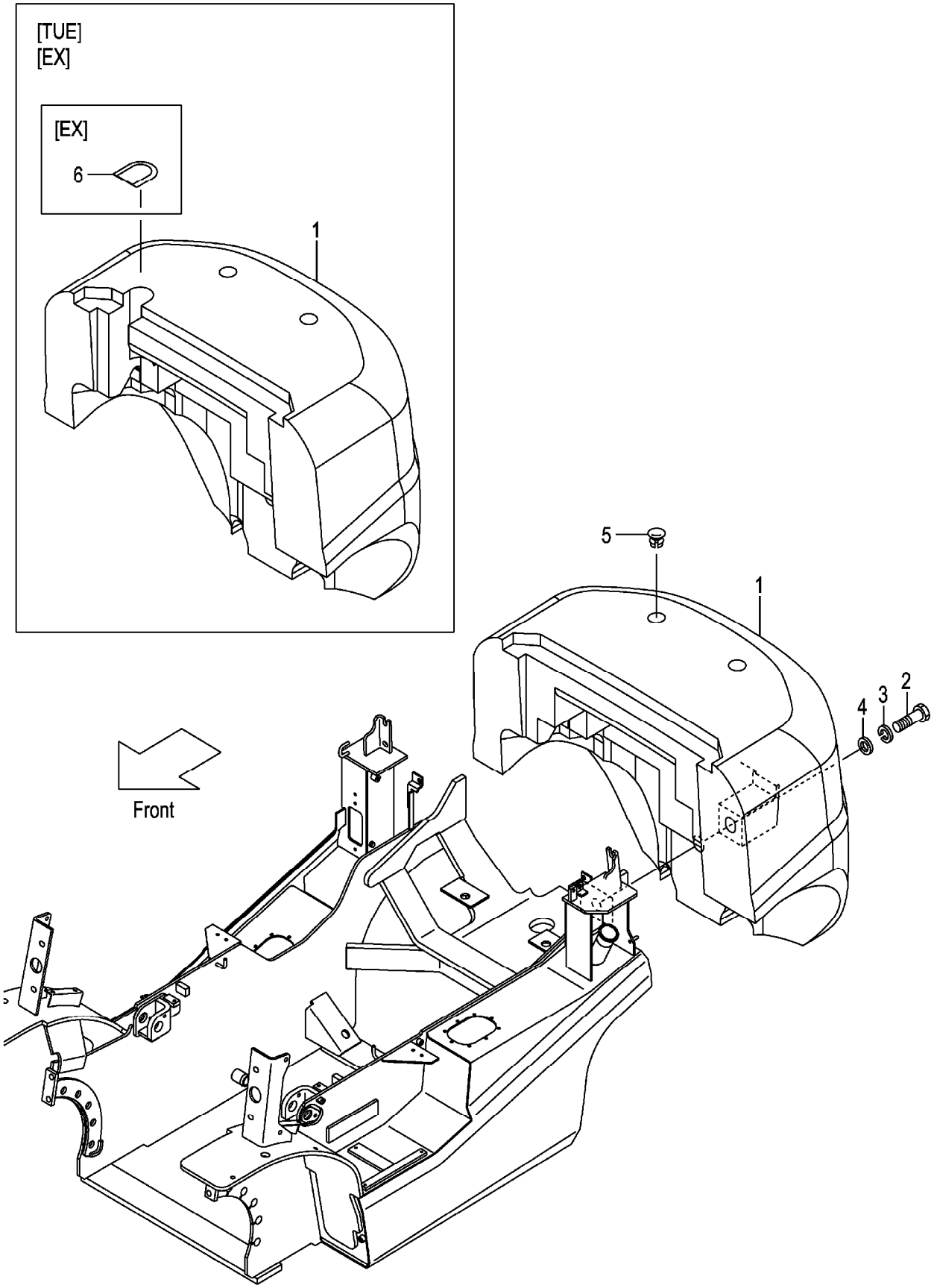

A:FG30C3 FG30T3 C:FD30C3 FD30T3
B:FG30W3 D:FD30W3

Item No	Part No.	Mark	Description		Req'd	Remarks : Serial No.
1	NO PART NO.	#	WEIGHT,BALANCE,3.0	ｳｴｲﾄ	1	
2	01110-36200		BOLT	ﾎﾞﾙﾄ	1	
3	02010-00036		WASHER	ﾜｯｼｬ	1	
4	25786-32031		WASHER	ﾜｯｼｬ	1	
5	22N56-32041		CAP	ｷｬｯﾌﾟ	2	
6	516G2-72051		COVER	ｶﾊﾞｰ	1	A,C
						[EX]

FIG.149 BALANCE WEIGHT [HC]

(F7036320) ﾊﾞﾗﾝｽｳｴｲﾄ

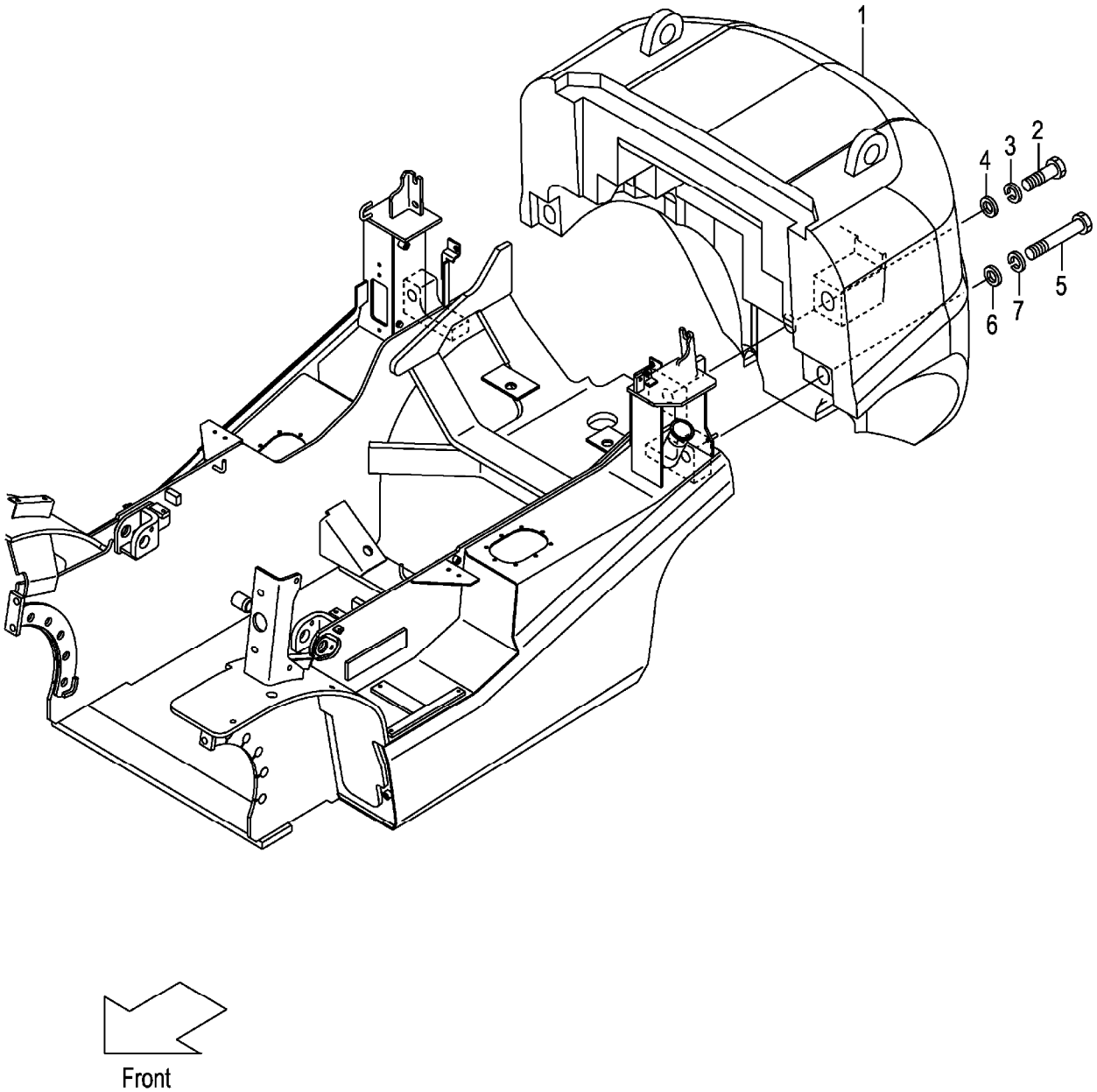

A:FG30C3 FG30T3 FG30W3
B:FD30C3 FD30T3 FD30W3

Item No	Part No.	Mark	Description		Req'd	Remarks : Serial No.
1	NO PART NO.	#	WEIGHT,BALANCE,3.0	ｳｴｲﾄ	1	[HC]
2	01110-36200		BOLT	ﾎﾞﾙﾄ	1	[HC]
3	02010-00036		WASHER	ﾜｯｼｬ	1	[HC]
4	25786-32031		WASHER	ﾜｯｼｬ	1	[HC]
5	01113-30370		BOLT	ﾎﾞﾙﾄ	2	[HC]
6	225R6-32001		WASHER	ﾜｯｼｬ	2	[HC]
7	02010-00030		WASHER	ﾜｯｼｬ	2	[HC]
8	225R9-12101	+	DECAL,HOOK-CAUTION	ﾃﾞｶﾙ	1	[HC]

FIG.150 FRONT GUARD

(F7036410) フロントガード

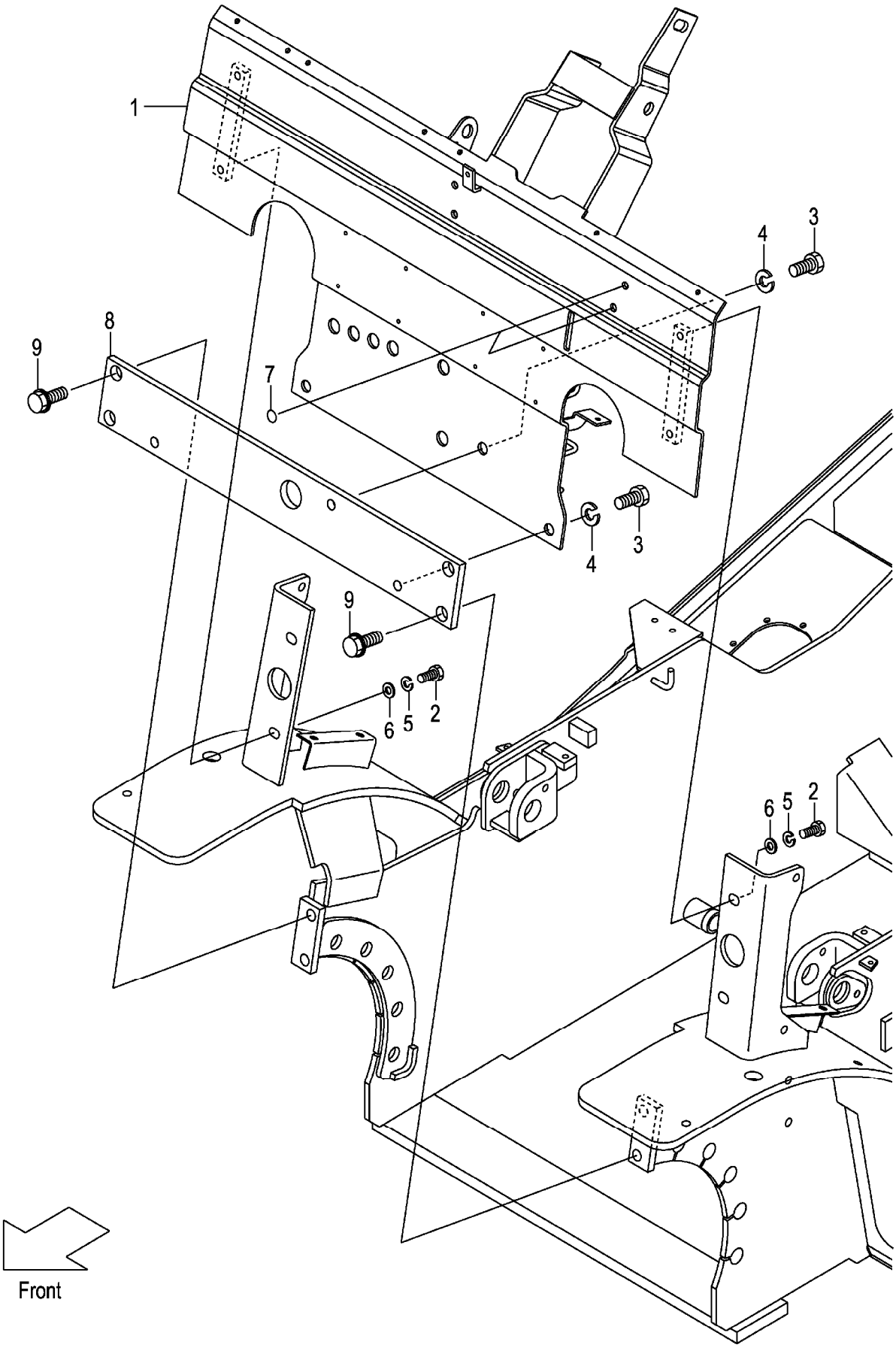

A:FG30C3 FG30T3 FG30W3
B:FD30C3 FD30T3 FD30W3

Item No	Part No.	Mark	Description		Req'd	Remarks : Serial No.
1	22N56-40101		GUARD,FRONT	ｶﾞｰﾄﾞ	1	
2	01186-12025		BOLT	ﾎﾞﾙﾄ	4	
-	01109-12025		BOLT,STAINLESS	ﾎﾞﾙﾄ	4	[FC]
3	01100-16020		BOLT	ﾎﾞﾙﾄ	3	
4	02010-00016		WASHER	ﾜｯｼｬ	3	
5	02013-00012		WASHER	ﾜｯｼｬ	4	[FC]
6	02001-00012		WASHER	ﾜｯｼｬ	4	[FC]
7	22N55-13181		SEAL,PANEL-COVER	ｼｰﾙ	2	
8	22N56-42041		PLATE,FRONT	ﾌﾟﾚｰﾄ	1	
9	216G6-43561		BOLT,FLANGE	ﾎﾞﾙﾄ	4	

FIG.151 BONNET

(F7036420) ﾎﾞﾝﾈｯﾄ

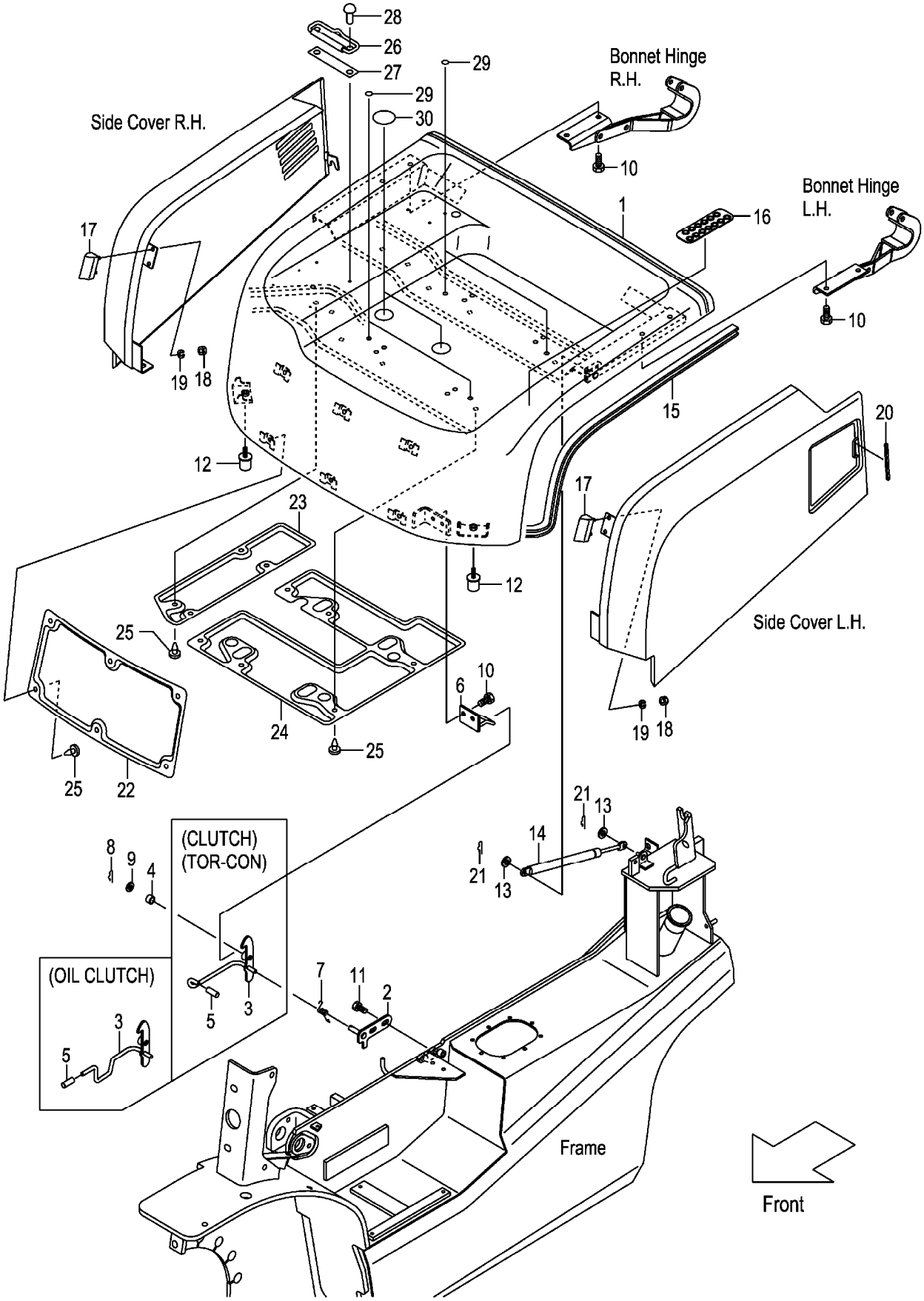

A:FG30C3 FG30T3 C:FD30C3 FD30T3
B:FG30W3 D:FD30W3

Item No	Part No.	Mark	Description		Req'd	Remarks : Serial No.
1	22N56-40202		BONNET	ﾎﾞﾝﾈｯﾄ	1	
-	52N55-30401		BONNET	ﾎﾞﾝﾈｯﾄ	1	[SCB001]
-	52N55-30401		BONNET	ﾎﾞﾝﾈｯﾄ	1	A,B,C
						[SCBCR]
-	52N59-20411		BONNET	ﾎﾞﾝﾈｯﾄ	1	[TOB]
A1	243C6-40021		CATCH-ASSY,BONNET	ﾎﾞﾝﾈｯﾄｷｬｯﾁｱｯｾﾝ	1	A,C
						INC.2-9
-	22P46-40021		CATCH-ASSY,BONNET	ﾎﾞﾝﾈｯﾄｷｬｯﾁｱｯｾﾝ	1	B,D
						INC.2-9
2	NO PART NO.	#	BRACKET,BONNET-CATCH	ﾌﾞﾗｹｯﾄ	1	
3	NO PART NO.	#	LATCH	ﾗｯﾁ	1	A,C
-	NO PART NO.	#	LATCH	ﾗｯﾁ	1	B,D
4	23655-22101		BUSHING	ﾌﾞｯｼﾝｸﾞ	1	
5	216G6-52291		CAP	ｷｬｯﾌﾟ	1	
6	216G6-42451		HOOK	ﾌｯｸ	1	
7	216G6-42481		SPRING	ｽﾌﾟﾘﾝｸﾞ	1	
8	216H5-42141		PIN,SNAP	ﾋﾟﾝ	1	
9	02000-00010		WASHER	ﾜｯｼｬ	1	
10	01183-08016		BOLT	ﾎﾞﾙﾄ	6	
11	01185-08016		BOLT	ﾎﾞﾙﾄ	2	
12	22N56-43051		RUBBER,STOPPER	ﾗﾊﾞｰ	2	
13	02000-00008		WASHER	ﾜｯｼｬ	2	
14	22N56-43041		SPRING,GAS	ｽﾌﾟﾘﾝｸﾞ	1	
15	22N56-40361		RUBBER,SEAL,BONNET	ﾗﾊﾞｰ	1	
16	22N56-43221		RUBBER	ﾗﾊﾞｰ	1	
17	22N56-43281		STOPPER,BONNET	ｽﾄｯﾊﾟ	2	
18	01400-00006		NUT	ﾅｯﾄ	4	
19	02010-00006		WASHER	ﾜｯｼｬ	4	
20	22N56-43271		RUBBER	ﾗﾊﾞｰ	1	
21	216H3-92171		PIN,SNAP	ﾋﾟﾝ	2	
22	22N56-40451		INSULATOR,A	ｲﾝｼｭﾚｰﾀ	1	
23	22N56-40461		INSULATOR,B	ｲﾝｼｭﾚｰﾀ	1	
24	22N56-40471		INSULATOR,C	ｲﾝｼｭﾚｰﾀ	1	
25	216G6-42541		CLIP	ｸﾘｯﾌﾟ	16	
26	25599-32001		BINDER	ﾊﾞｲﾝﾀﾞ	1	
27	25599-32021		SHEET,BINDER	ｼｰﾄ	1	
28	22256-42001		RIVET	ﾘﾍﾞｯﾄ	2	
29	22N56-43531		SEAL,PANEL-COVER	ｼｰﾙ	6	
30	22N56-43541		SEAT,BONNET	ｼｰﾄ	2	

FIG.152 RADIATOR COVER

(F7036430) ﾗｼﾞｴｰﾀｶﾊﾞｰ

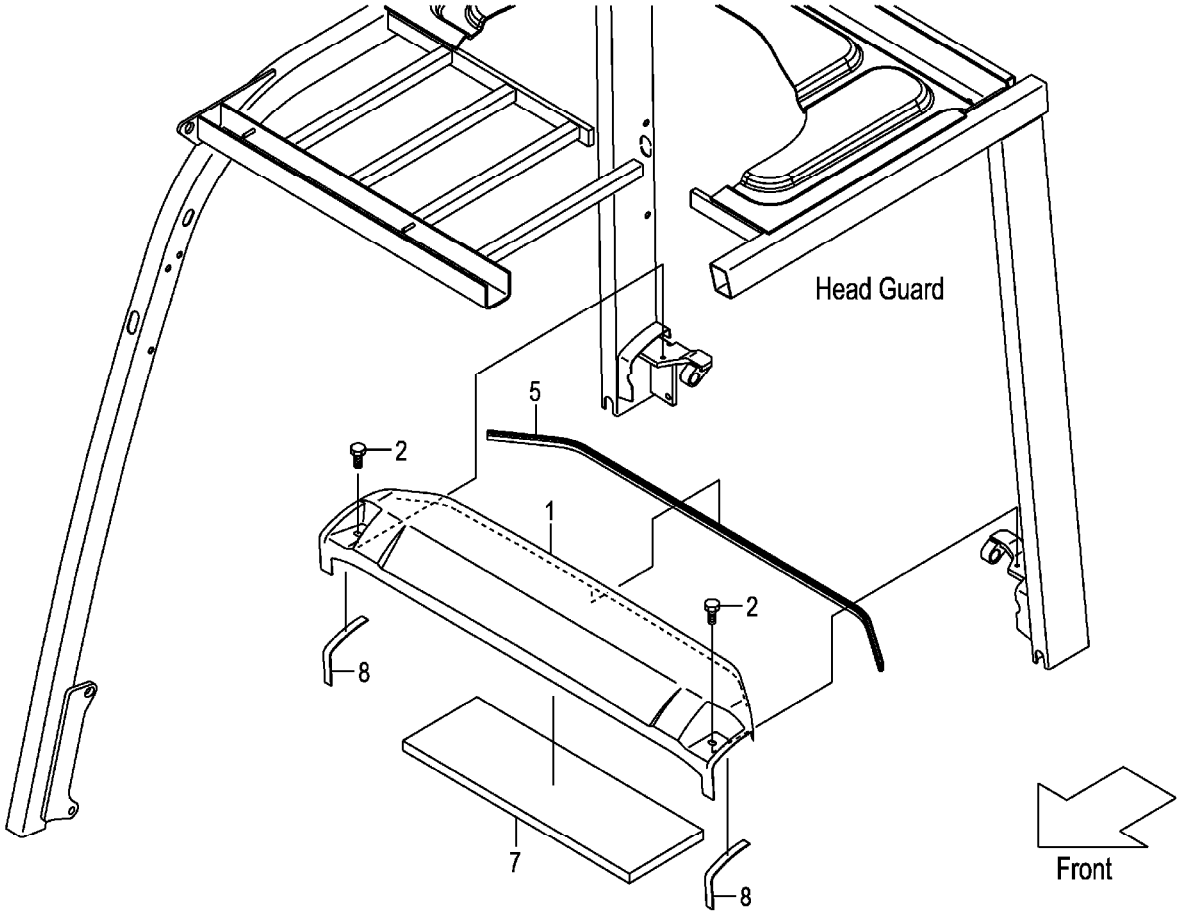

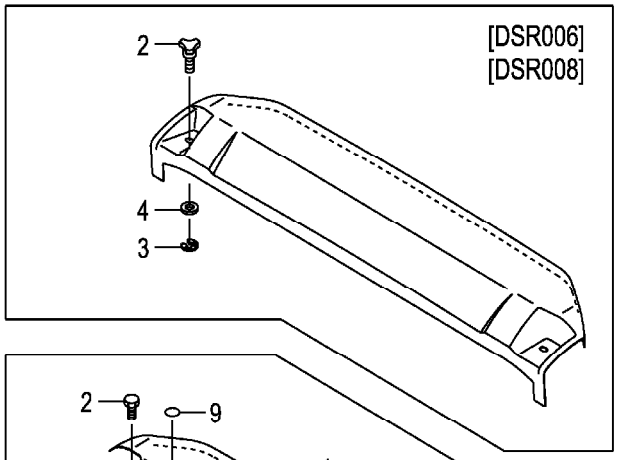

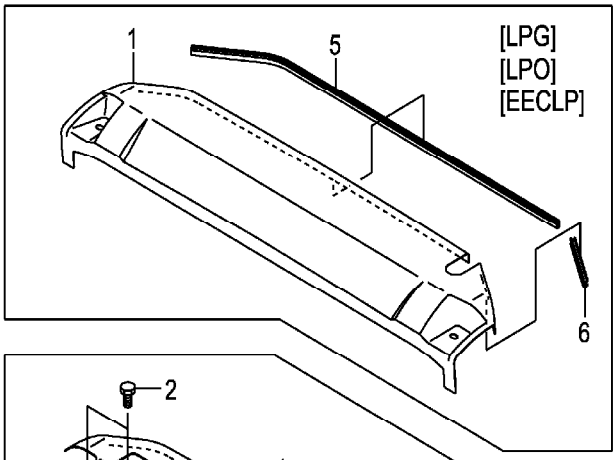

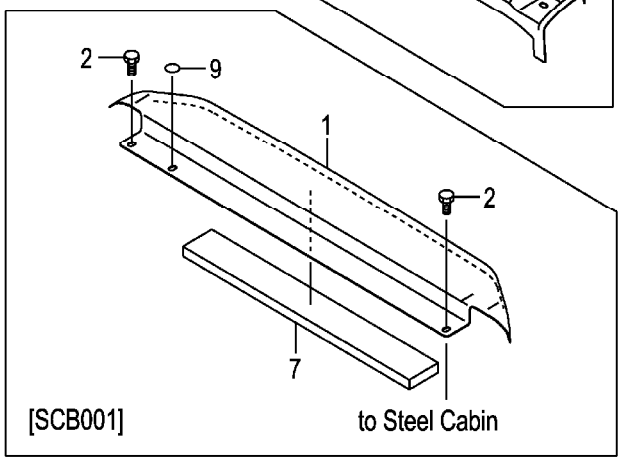

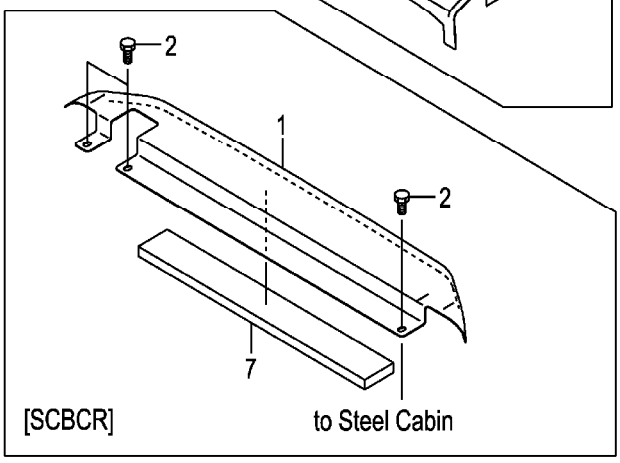

A:FG30C3 FG30T3 C:FD30C3 FD30T3
B:FG30W3 D:FD30W3

Item No	Part No.	Mark	Description		Req'd	Remarks : Serial No.
1	22N56-40302		COVER,RADIATOR	ｶﾊﾞｰ	1	
-	52N55-40211		COVER,RADIATOR	ｶﾊﾞｰ	1	[AW061]
-	52E00-52121		COVER,RADIATOR	ｶﾊﾞｰ	1	A,B
						[LPG][LPO][EECLP]
-	52N55-30451		COVER,RADIATOR	ｶﾊﾞｰ	1	[SCB001]
-	52N57-60451		COVER,RADIATOR	ｶﾊﾞｰ	1	A,B,C
						[SCBCR]
2	01181-08016		BOLT	ﾎﾞﾙﾄ	2	
-	01181-08016		BOLT	ﾎﾞﾙﾄ	3	A,B,C
						[SCBCR]
-	222A6-42451		BOLT,KNOB	ﾎﾞﾙﾄ	2	[DSR006][DSR008]
3	222A6-42461		E-RING	Eﾘﾝｸﾞ	2	[DSR006][DSR008]
4	02000-00008		WASHER	ﾜｯｼｬ	2	[DSR006][DSR008]
5	22N56-40371		SEAL,RUBBER	ｼｰﾙ	1	
-	518G0-52531		SEAL,RUBBER	ｼｰﾙ	1	A,B
						[LPG][LPO][EECLP]
6	518G0-52541		SEAL,RUBBER	ｼｰﾙ	1	A,B
						[LPG][LPO][EECLP]
7	22N56-40401		RUBBER,RAD-COVER	ﾗﾊﾞｰ	1	
-	52N55-32171		RUBBER,RAD-COVER	ﾗﾊﾞｰ	1	[SCB001]
-	52N55-32171		RUBBER,RAD-COVER	ﾗﾊﾞｰ	1	A,B,C
						[SCBCR]
8	234A6-43121		RUBBER	ﾗﾊﾞｰ	2	(WITHOUT SCB001,SCBCR)
9	22N56-43531		SEAL,PANEL-COVER	ｼｰﾙ	1	[SCB001]

FIG.153 BONNET HINGE

(F7036440) ﾎﾞﾝﾈｯﾄﾋﾝｼﾞ

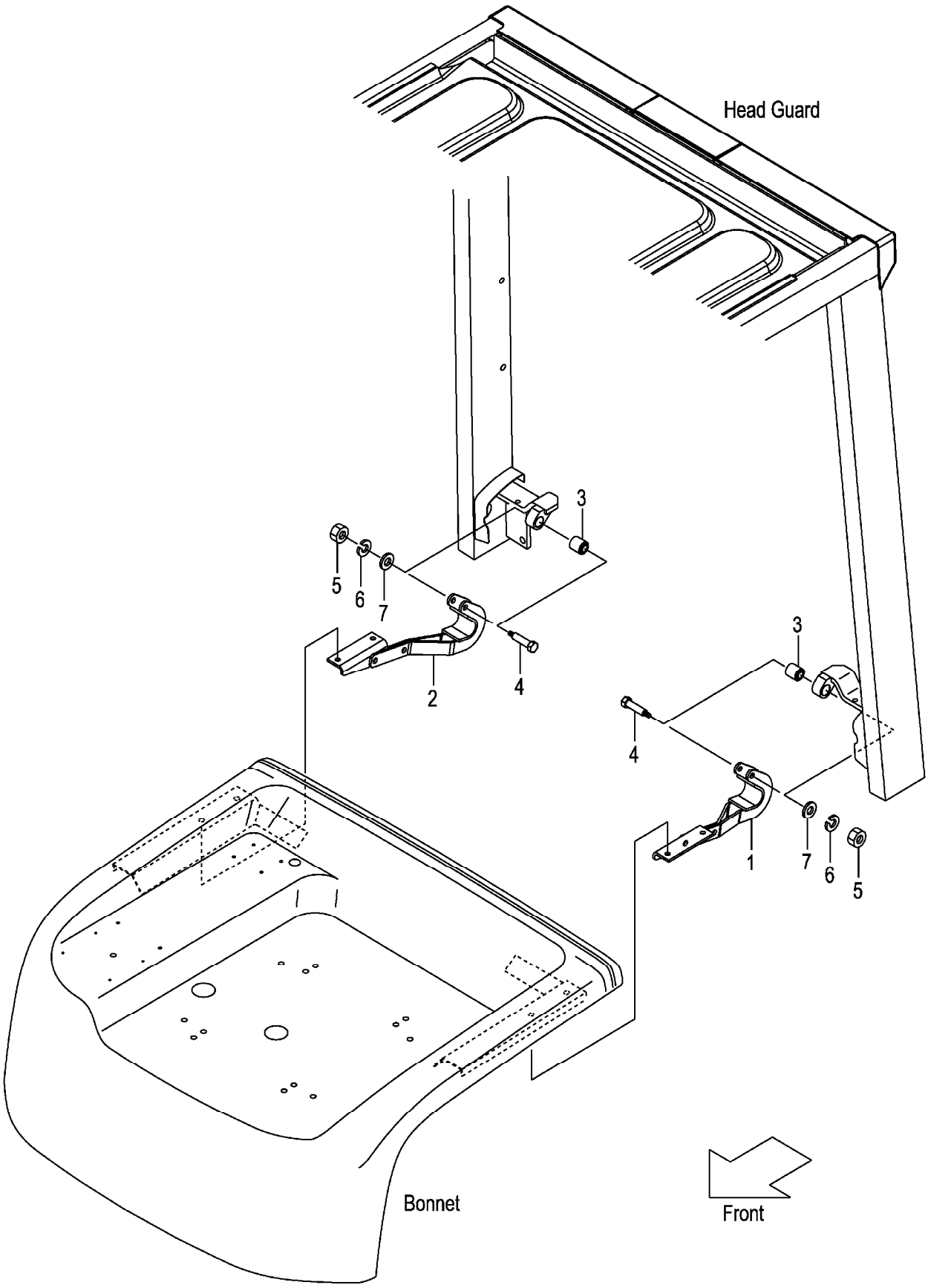

A:FG30C3 FG30T3 FG30W3
B:FD30C3 FD30T3 FD30W3

Item No	Part No.	Mark	Description		Req'd	Remarks : Serial No.
1	22N56-42602		HINGE,LH	ﾋﾝｼﾞ	1	
2	22N56-42612		HINGE,RH	ﾋﾝｼﾞ	1	
3	216G6-42921		BUSHING	ﾌﾞｯｼﾝｸﾞ	2	
4	216G6-42931		BOLT	ﾎﾞﾙﾄ	2	
5	01400-00006		NUT	ﾅｯﾄ	2	
6	02010-00006		WASHER	ﾜｯｼｬ	2	
7	02000-00006		WASHER	ﾜｯｼｬ	2	

FIG.154 FLOOR BOARD

(F7036450) ﾌﾛｱﾎﾞｰﾄﾞ

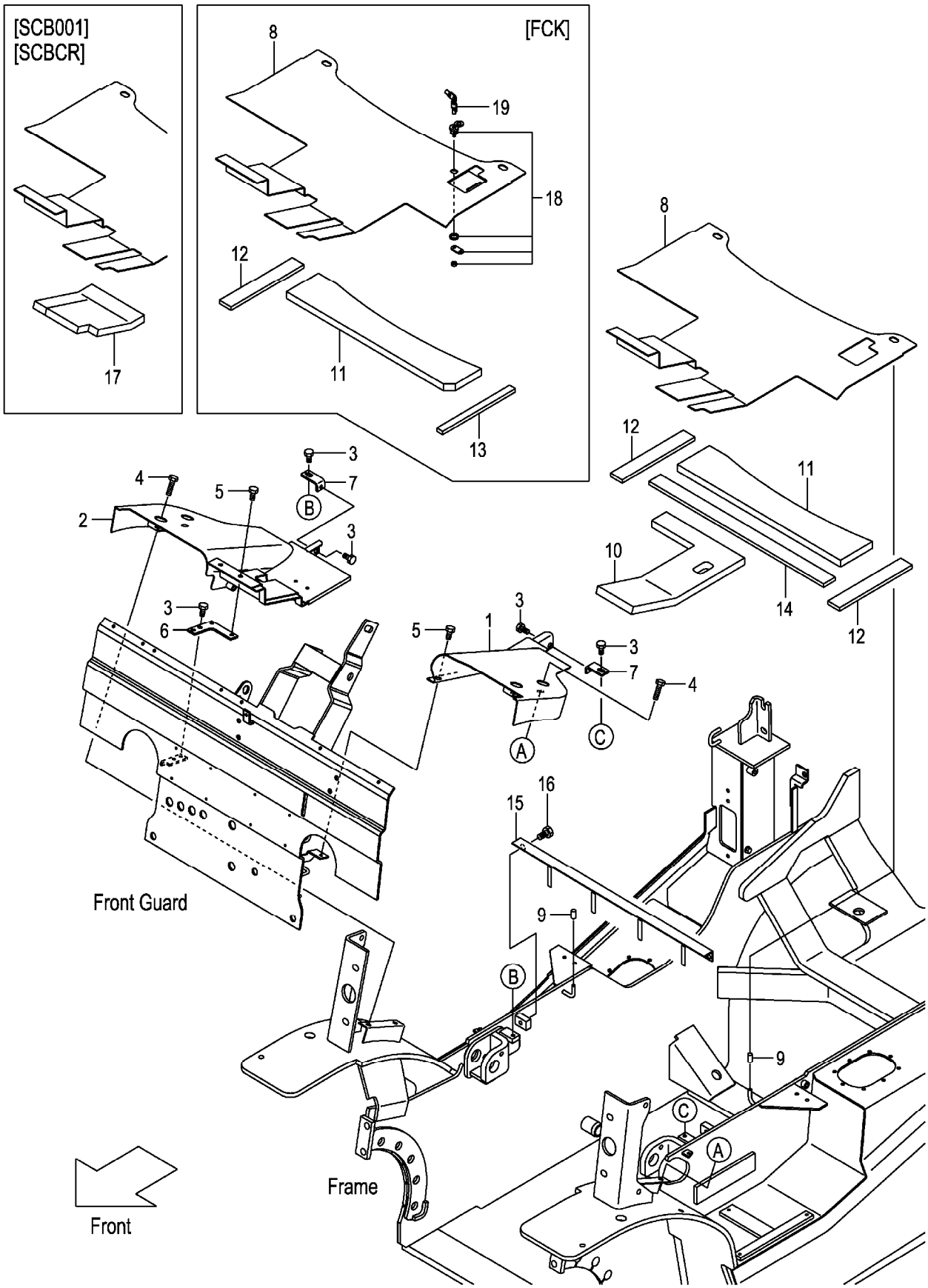

A:FG30C3 FG30T3 C:FD30C3 FD30T3
B:FG30W3 D:FD30W3

Item No	Part No.	Mark	Description		Req'd	Remarks : Serial No.
1	22N56-50201		COVER,LH	ｶﾊﾞｰ	1	
2	22N56-50211		COVER,RH	ｶﾊﾞｰ	1	
3	01185-08016		BOLT	ﾎﾞﾙﾄ	6	
4	01185-08030		BOLT	ﾎﾞﾙﾄ	4	
5	273A6-42471		BOLT	ﾎﾞﾙﾄ	3	
6	22N56-52251		BRACKET	ﾌﾞﾗｹｯﾄ	1	
7	22N56-52241		BRACKET	ﾌﾞﾗｹｯﾄ	2	
8	22N56-52201		BOARD,FLOOR	ﾎﾞｰﾄﾞ	1	
-	52N58-10201		BOARD,FLOOR	ﾎﾞｰﾄﾞ	1	[FCK]
9	216G6-52291		CAP	ｷｬｯﾌﾟ	2	
10	22N56-52222		RUBBER,FLOOR-BOARD	ﾗﾊﾞｰ	1	
11	22N56-52231		RUBBER,FLOOR-BOARD	ﾗﾊﾞｰ	1	
-	52N58-12201		RUBBER,FLOOR-BOARD	ﾗﾊﾞｰ	1	[FCK]
12	22N56-52351		RUBBER	ﾗﾊﾞｰ	2	
-	22N56-52351		RUBBER	ﾗﾊﾞｰ	1	[FCK]
13	216G6-52161		RUBBER	ﾗﾊﾞｰ	1	[FCK]
14	22N56-52361		RUBBER	ﾗﾊﾞｰ	1	
15	22N56-52402		ANGLE	ｱﾝｸﾞﾙ	1	
16	01185-10016		BOLT	ﾎﾞﾙﾄ	2	
17	52N55-32331		RUBBER,FLOOR-BOARD	ﾗﾊﾞｰ	1	[SCB001]
-	52N55-32331		RUBBER,FLOOR-BOARD	ﾗﾊﾞｰ	1	A,B,C
						[SCBCR]
A1	52N58-10301		LOCK-ASSY,COIN	ﾛｯｸｱｯｾﾝ	1	[FCK] INC.18,19
18	52N58-12501		CYL,KEY	ｼﾘﾝﾀﾞ	1	[FCK]
19	52N58-12511		KEY	ｷｰ	1	[FCK](1SET=2PCS)

FIG.155 STEP & FLOOR MAT

(F7036460) ｽﾃｯﾌﾟ&ﾌﾛｱﾏｯﾄ

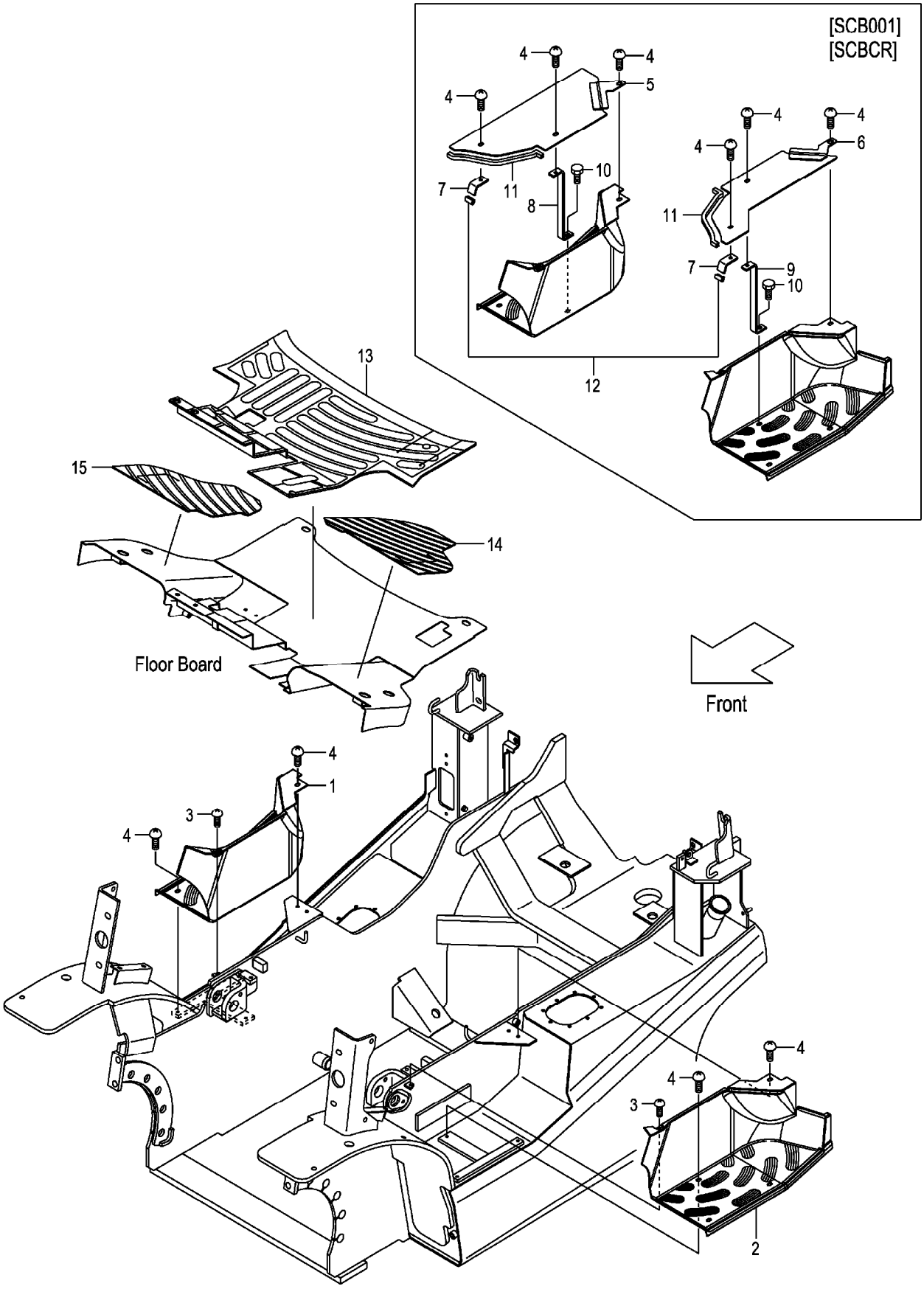

A:FG30C3 FG30T3 C:FD30C3 FD30T3
B:FG30W3 D:FD30W3

Item No	Part No.	Mark	Description		Req'd	Remarks : Serial No.
1	22N56-42901		COVER,STEP,RH	ｶﾊﾞｰ	1	(WITHOUT HR)
-	52N55-42601		COVER,STEP,RH	ｶﾊﾞｰ	1	[AW061]
2	22N56-42911		COVER,STEP,LH	ｶﾊﾞｰ	1	
-	52N55-42611		COVER,STEP,LH	ｶﾊﾞｰ	1	[AW061]
3	214A6-42771		SCREW	ｽｸﾘｭ	2	
-	214A6-42771		SCREW	ｽｸﾘｭ	1	[HR]
4	278M6-42031		SCREW	ｽｸﾘｭ	8	
-	278M6-42031		SCREW	ｽｸﾘｭ	4	[HR]
-	278M6-42031		SCREW	ｽｸﾘｭ	10	[SCB001]
-	278M6-42031		SCREW	ｽｸﾘｭ	10	A,B,C
						[SCBCR]
-	278M6-42031		SCREW	ｽｸﾘｭ	5	[HR/SCB001]
-	278M6-42031		SCREW	ｽｸﾘｭ	5	A,B,C
						[HR/SCBCR]
5	52N55-32051		PLATE,STEP,RH	ﾌﾟﾚｰﾄ	1	[SCB001](WITHOUT HR/SCB001)
-	52N55-32051		PLATE,STEP,RH	ﾌﾟﾚｰﾄ	1	A,B,C
						[SCBCR](WITHOUT HR/SCBCR)
6	52N55-32061		PLATE,STEP,LH	ﾌﾟﾚｰﾄ	1	[SCB001]
-	52N55-32061		PLATE,STEP,LH	ﾌﾟﾚｰﾄ	1	A,B,C
						[SCBCR]
7	52N55-32091		BRACKET	ﾌﾞﾗｹｯﾄ	2	[SCB001]
-	52N55-32091		BRACKET	ﾌﾞﾗｹｯﾄ	2	A,B,C
						[SCBCR]
-	52N55-32091		BRACKET	ﾌﾞﾗｹｯﾄ	1	[HR/SCB001]
-	52N55-32091		BRACKET	ﾌﾞﾗｹｯﾄ	1	A,B,C
						[HR/SCBCR]
8	52N55-32101		BRACKET,RH	ﾌﾞﾗｹｯﾄ	1	[SCB001](WITHOUT HR/SCB001)
-	52N55-32101		BRACKET,RH	ﾌﾞﾗｹｯﾄ	1	A,B,C
						[SCBCR](WITHOUT HR/SCBCR)
9	52N55-32111		BRACKET,LH	ﾌﾞﾗｹｯﾄ	1	[SCB001]
-	52N55-32111		BRACKET,LH	ﾌﾞﾗｹｯﾄ	1	A,B,C
						[SCBCR]
10	216H3-92281		BOLT	ﾎﾞﾙﾄ	2	[SCB001]
-	216H3-92281		BOLT	ﾎﾞﾙﾄ	2	A,B,C
						[SCBCR]
-	216H3-92281		BOLT	ﾎﾞﾙﾄ	1	[HR/SCB001]
-	216H3-92281		BOLT	ﾎﾞﾙﾄ	1	A,B,C
						[HR/SCBCR]
11	509S3-92261		RUBBER,SEAL	ﾗﾊﾞｰ	2	[SCB001]
-	509S3-92261		RUBBER,SEAL	ﾗﾊﾞｰ	2	A,B,C
						[SCBCR]
-	509S3-92261		RUBBER,SEAL	ﾗﾊﾞｰ	1	[HR/SCB001]
-	509S3-92261		RUBBER,SEAL	ﾗﾊﾞｰ	1	A,B,C
						[HR/SCBCR]
12	209P6-42831		EDGING	ｴｯｼﾞﾝｸﾞ	1	[SCB001]
-	209P6-42831		EDGING	ｴｯｼﾞﾝｸﾞ	1	A,B,C
						[SCBCR]
13	22N56-52302		MAT,FLOOR	ﾏｯﾄ	1	
-	52N58-10311		MAT,FLOOR	ﾏｯﾄ	1	[FCK]
14	22N56-52311		MAT,FLOOR,LH	ﾏｯﾄ	1	

FIG.155 STEP & FLOOR MAT

(F7036460) ｽﾃｯﾌﾟ&ﾌﾛｱﾏｯﾄ

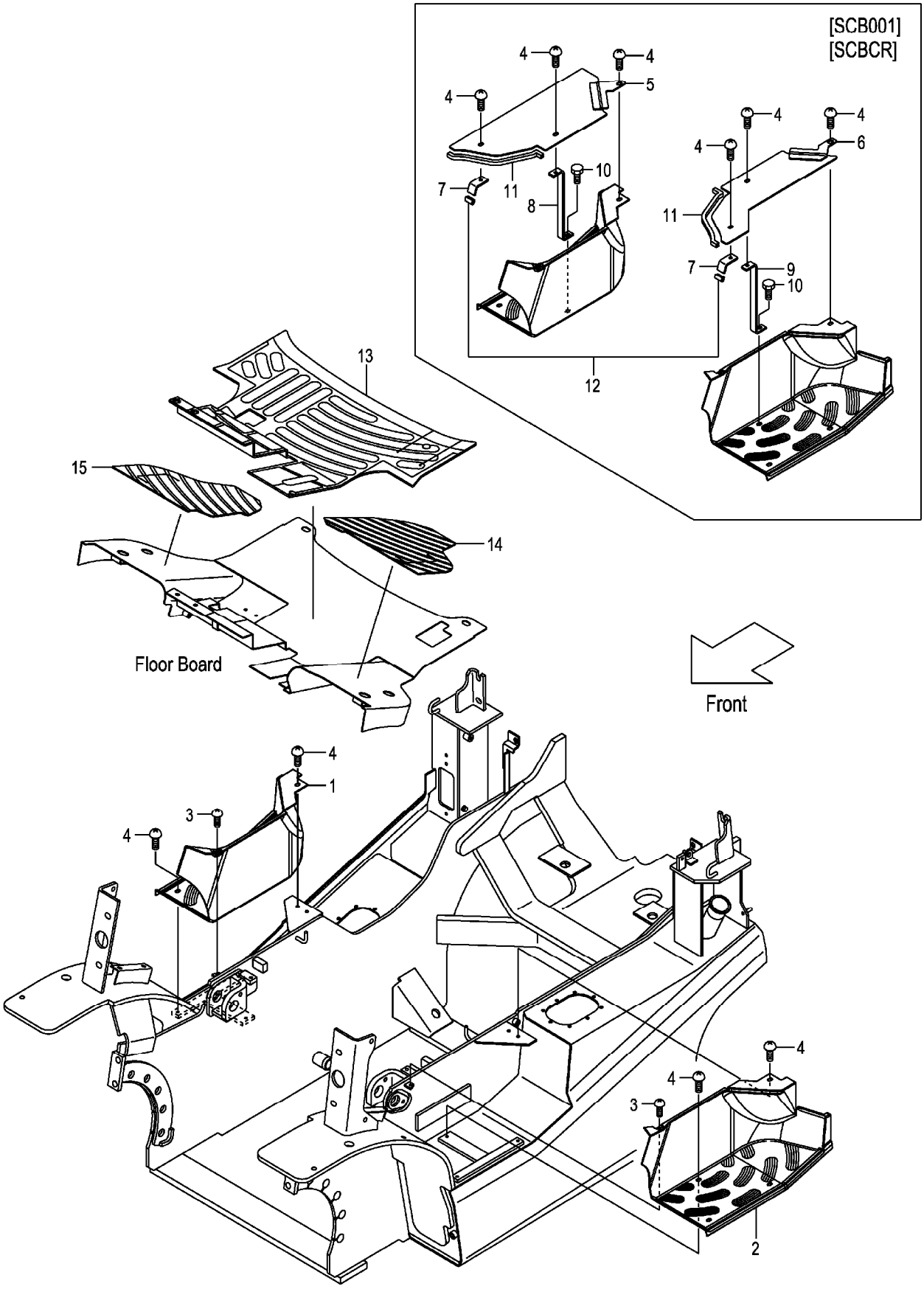

A:FG30C3 FG30T3 C:FD30C3 FD30T3
B:FG30W3 D:FD30W3

Item No	Part No.	Mark	Description	Req'd	Remarks : Serial No.
15	22N56-52321		MAT,FLOOR,RH マット	1	

M E M O

M E M O

FIG.156 FRONT COVER (CLUTCH)(OIL CLUTCH)

(F7036470) フロントカバー

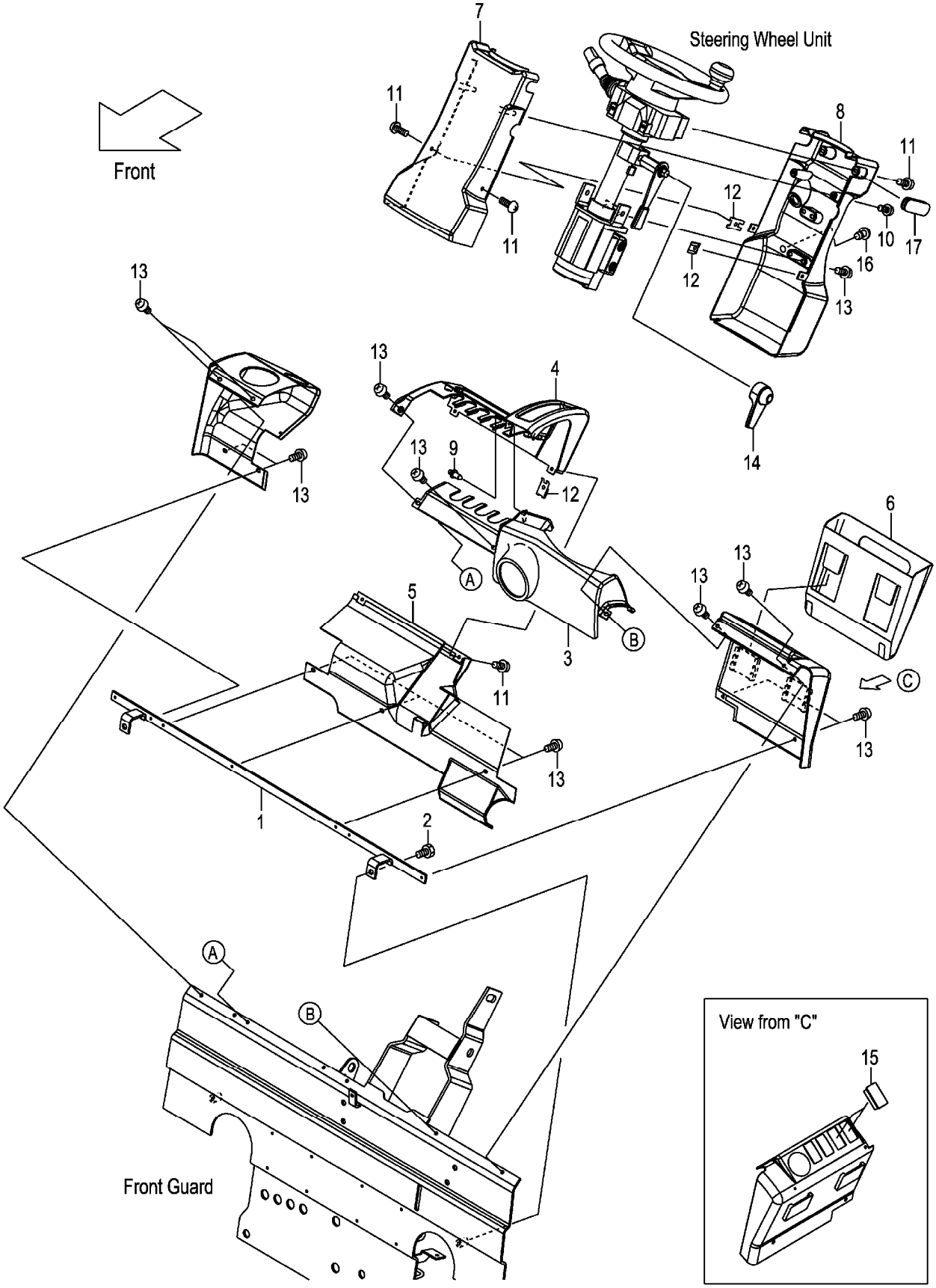

A:FG30C3 C:FD30C3
B:FG30W3 D:FD30W3

Item No	Part No.	Mark	Description		Req'd	Remarks : Serial No.
1	22N56-42861		BRACKET,COVER	ﾌﾞﾗｹｯﾄ	1	
2	01185-08016		BOLT	ﾎﾞﾙﾄ	2	
3	22N56-42741		COVER,FRONT	ｶﾊﾞｰ	1	
4	22N56-42701		COVER,METER-PANEL	ｶﾊﾞｰ	1	
5	22N56-42731		COVER,LOWER	ｶﾊﾞｰ	1	
6	22N56-42751		POCKET,BINDER	ﾎﾟｹｯﾄ	1	
7	22N54-12321		COVER,HANDLE,FRONT	ｶﾊﾞｰ	1	
8	22N54-12311		COVER,HANDLE,REAR	ｶﾊﾞｰ	1	
-	52N57-72001		COVER,HANDLE,REAR	ｶﾊﾞｰ	1	[SWD]
9	22N56-42791		RIVET,PUSH	ﾘﾍﾞｯﾄ	1	
10	222A2-42031		SCREW	ｽｸﾘｭ	2	
11	209K2-43001		SCREW	ｽｸﾘｭ	6	
12	281E6-42521		NUT,SPEED	ﾅｯﾄ	4	
13	225R6-42031		SCREW	ｽｸﾘｭ	15	
14	22N54-12201		COVER,TILT-LOCK	ｶﾊﾞｰ	1	
15	256T2-42121		CAP	ｷｬｯﾌﾟ	2	
16	281E6-42571		PLUG,HOLE	ﾌﾟﾗｸﾞ	1	
17	239A4-12541		GROMMET,HANDLE-COVER	ｸﾞﾛﾒｯﾄ	1	

FIG.157 FRONT COVER (TOR-CON)

(F7036480) フロントカバー

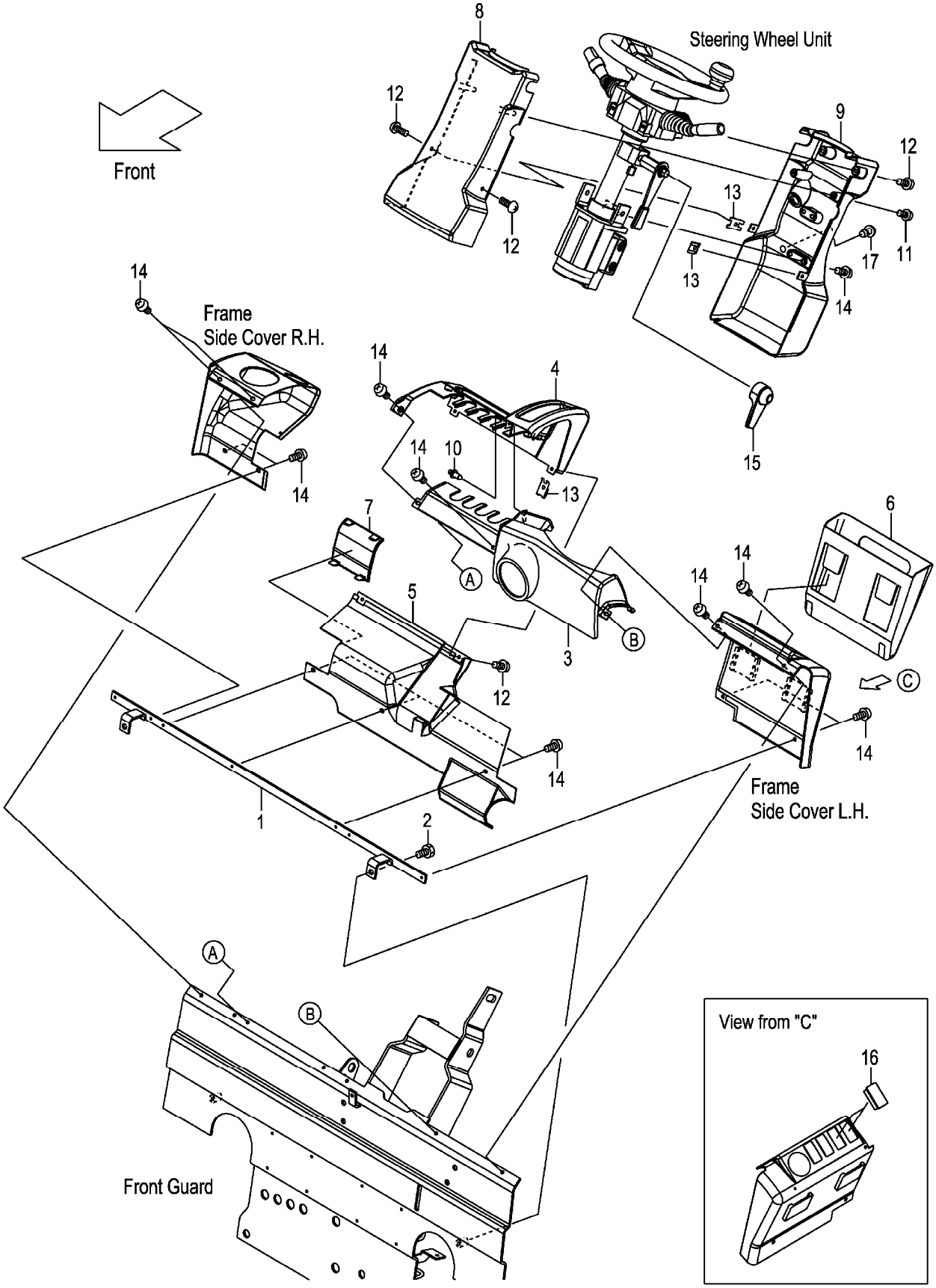

A:FG30T3
B:FD30T3

Item No	Part No.	Mark	Description		Req'd	Remarks : Serial No.
1	22N56-42861		BRACKET,COVER	ﾌﾞﾗｹｯﾄ	1	
2	01185-08016		BOLT	ﾎﾞﾙﾄ	2	
3	22N56-42741		COVER,FRONT	ｶﾊﾞｰ	1	
4	22N56-42701		COVER,METER-PANEL	ｶﾊﾞｰ	1	
5	22N56-42731		COVER,LOWER	ｶﾊﾞｰ	1	
6	22N56-42751		POCKET,BINDER	ﾎﾟｹｯﾄ	1	
7	22N56-42771		COVER,CHANGE-LEVER	ｶﾊﾞｰ	1	
8	22N54-12321		COVER,HANDLE,FRONT	ｶﾊﾞｰ	1	
9	22N54-12311		COVER,HANDLE,REAR	ｶﾊﾞｰ	1	
-	52N57-72001		COVER,HANDLE,REAR	ｶﾊﾞｰ	1	[SWD]
10	22N56-42791		RIVET,PUSH	ﾘﾍﾞｯﾄ	1	
11	222A2-42031		SCREW	ｽｸﾘｭ	2	
12	209K2-43001		SCREW	ｽｸﾘｭ	6	
13	281E6-42521		NUT,SPEED	ﾅｯﾄ	4	
14	225R6-42031		SCREW	ｽｸﾘｭ	15	
15	22N54-12201		COVER,TILT-LOCK	ｶﾊﾞｰ	1	
16	256T2-42121		CAP	ｷｬｯﾌﾟ	2	
17	281E6-42571		PLUG,HOLE	ﾌﾟﾗｸﾞ	1	

FIG.158 FRONT COVER (TOR-CON):[EXN]

(F7036490) フロントカバー

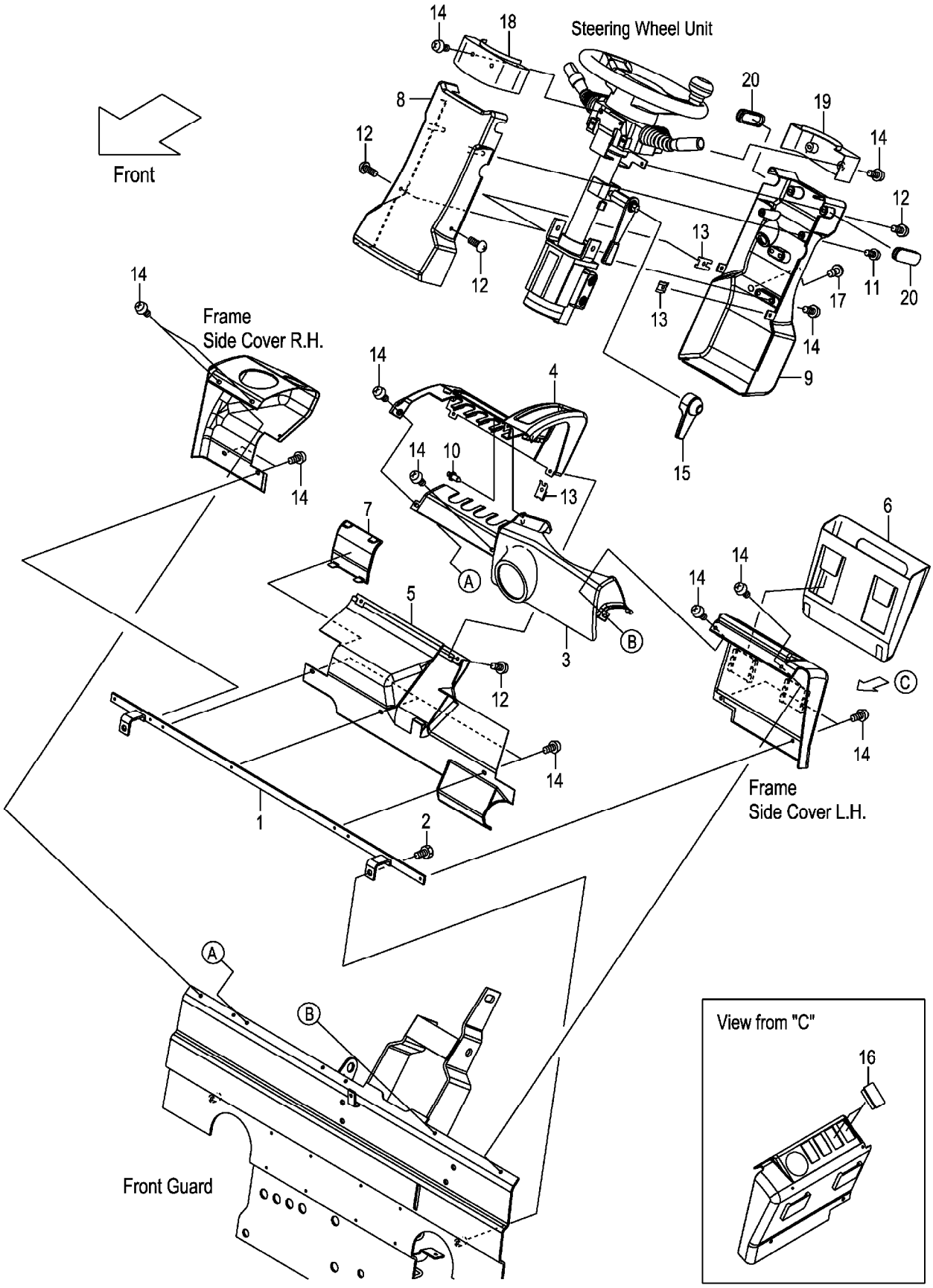

A:FG30T3
B:FD30T3

Item No	Part No.	Mark	Description		Req'd	Remarks : Serial No.
1	22N56-42861		BRACKET,COVER	ﾌﾞﾗｹｯﾄ	1	[EXN]
2	01185-08016		BOLT	ﾎﾞﾙﾄ	2	[EXN]
3	22N56-42741		COVER,FRONT	ｶﾊﾞｰ	1	[EXN]
4	22N56-42701		COVER,METER-PANEL	ｶﾊﾞｰ	1	[EXN]
5	22N56-42731		COVER,LOWER	ｶﾊﾞｰ	1	[EXN]
6	22N56-42751		POCKET,BINDER	ﾎﾟｹｯﾄ	1	[EXN]
7	22N56-42771		COVER,CHANGE-LEVER	ｶﾊﾞｰ	1	[EXN]
8	52N52-62011		COVER,HANDLE,FRONT	ｶﾊﾞｰ	1	[EXN]
9	52N52-62001		COVER,HANDLE,REAR	ｶﾊﾞｰ	1	[EXN]
10	22N56-42791		RIVET,PUSH	ﾘﾍﾞｯﾄ	1	[EXN]
11	222A2-42031		SCREW	ｽｸﾘｭ	2	[EXN]
12	209K2-43001		SCREW	ｽｸﾘｭ	6	[EXN]
13	281E6-42521		NUT,SPEED	ﾅｯﾄ	4	[EXN]
14	225R6-42031		SCREW	ｽｸﾘｭ	19	[EXN]
15	22N54-12201		COVER,TILT-LOCK	ｶﾊﾞｰ	1	[EXN]
16	256T2-42121		CAP	ｷｬｯﾌﾟ	2	[EXN]
17	281E6-42571		PLUG,HOLE	ﾌﾟﾗｸﾞ	1	[EXN]
18	52N52-62301		COVER,HANDLE,UPPER-F	ｶﾊﾞｰ	1	[EXN]
19	52N52-62401		COVER,HANDLE,UPPER-R	ｶﾊﾞｰ	1	[EXN]
20	239A4-12541		GROMMET,HANDLE-COVER	ｸﾞﾛﾒｯﾄ	2	[EXN]

FIG.159 SIDE COVER

(F70364A0) サイドカバー

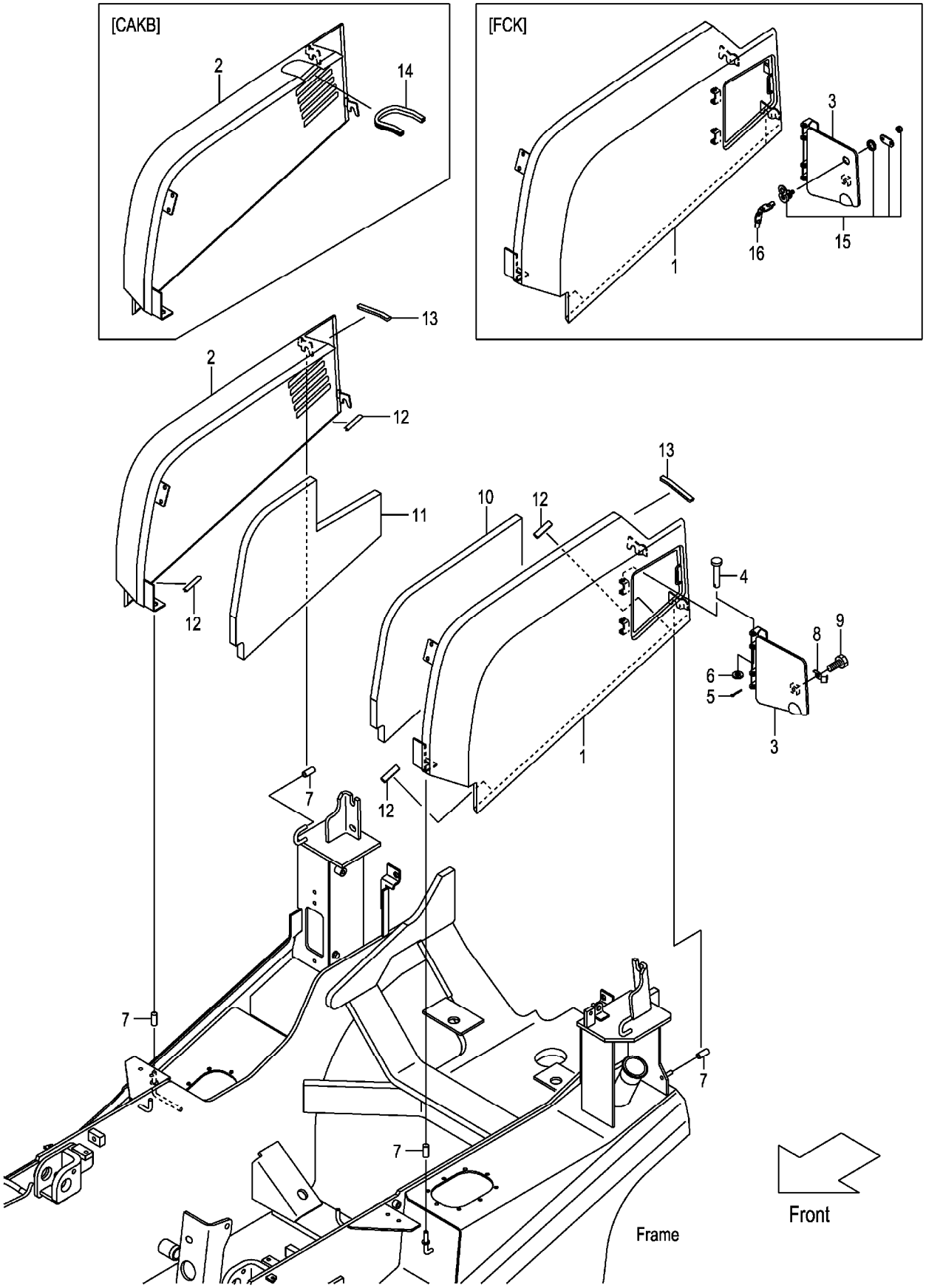

A:FG30C3 FG30T3 FG30W3
B:FD30C3 FD30T3 FD30W3

Item No	Part No.	Mark	Description		Req'd	Remarks : Serial No.
1	22N56-40252		COVER,SIDE,LH	ｶﾊﾞｰ	1	
-	52N58-10211		COVER,SIDE,LH	ｶﾊﾞｰ	1	[FCK]
2	22N56-40262		COVER,SIDE,RH	ｶﾊﾞｰ	1	
-	52N50-90201		COVER,SIDE,RH	ｶﾊﾞｰ	1	[CAKB]
3	22N56-40272		COVER,FUEL-CAP	ｶﾊﾞｰ	1	
-	52N58-10221		COVER,FUEL-CAP	ｶﾊﾞｰ	1	[FCK]
4	02262-08045		PIN,CLEVIS	ﾋﾟﾝ	2	
5	02200-02020		PIN,COTTER	ﾋﾟﾝ	2	A:1-124
						B:1-225
-	216H3-92171		PIN,SNAP	ﾋﾟﾝ	2	A:125-
						B:226-
6	02000-00008		WASHER	ﾜｯｼｬ	2	
7	216G6-52291		CAP	ｷｬｯﾌﾟ	6	
8	22N56-43251		SPRING,LEAF	ｽﾌﾟﾘﾝｸﾞ	1	
9	01183-08012		BOLT	ﾎﾞﾙﾄ	1	
10	22N56-40411		RUBBER,FOAM,LH	ﾗﾊﾞｰ	1	
11	22N56-40421		RUBBER,FOAM,RH	ﾗﾊﾞｰ	1	
12	209P6-42831		EDGING,L=50	ｴｯｼﾞﾝｸﾞ	4	
13	243C6-42821		EDGING,L=100	ｴｯｼﾞﾝｸﾞ	2	
14	243C6-42821		EDGING,L=230	ｴｯｼﾞﾝｸﾞ	1	[CAKB]
A1	52N58-10301		LOCK-ASSY,COIN	ﾛｯｸｱｯｾﾝ	1	[FCK] INC.15,16
15	52N58-12501		CYL,KEY	ｼﾘﾝﾀﾞ	1	[FCK]
16	52N58-12511		KEY	ｷｰ	1	[FCK](1SET=2PCS)

FIG.160 SIDE COVER [SCB001][SCBCR]

(F70364B0) サイドカバー

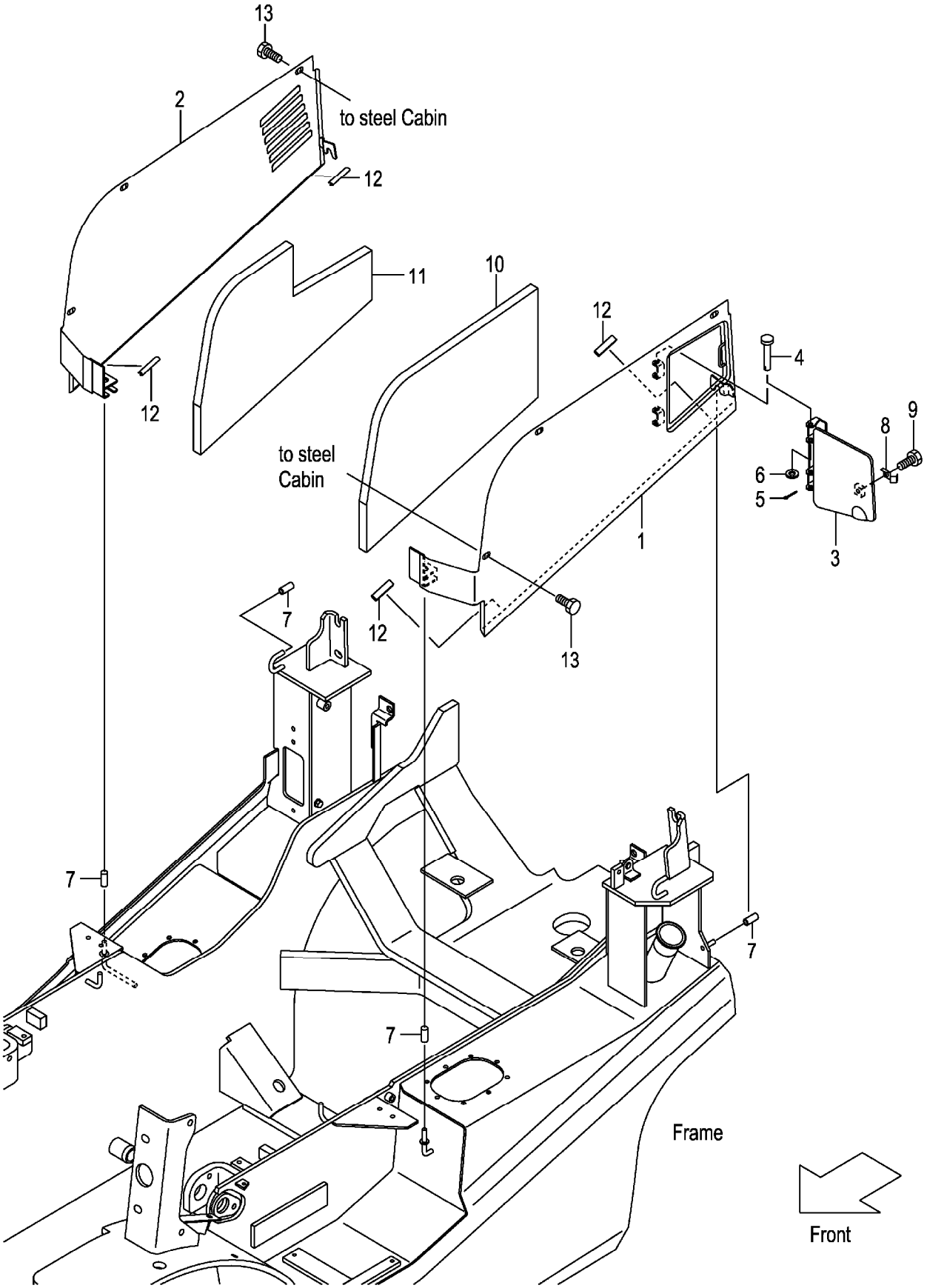

A:FG30C3 FG30T3 C:FD30C3 FD30T3
B:FG30W3 D:FD30W3

Item No	Part No.	Mark	Description		Req'd	Remarks : Serial No.
1	52N55-30511		COVER,SIDE,LH	ｶﾊﾞｰ	1	[SCB001]
-	52N55-30511		COVER,SIDE,LH	ｶﾊﾞｰ	1	A,B,C [SCBCR]
2	52N55-30501		COVER,SIDE,RH	ｶﾊﾞｰ	1	[SCB001]
-	52N55-30501		COVER,SIDE,RH	ｶﾊﾞｰ	1	A,B,C [SCBCR]
3	22N56-40272		COVER,FUEL-CAP	ｶﾊﾞｰ	1	[SCB001]
-	22N56-40272		COVER,FUEL-CAP	ｶﾊﾞｰ	1	A,B,C [SCBCR]
4	02262-08045		PIN,CLEVIS	ﾋﾟﾝ	2	[SCB001]
-	02262-08045		PIN,CLEVIS	ﾋﾟﾝ	2	A,B,C [SCBCR]
5	02200-02020		PIN,COTTER	ﾋﾟﾝ	2	A,B:1-124 C,D:1-225 [SCB001]
-	216H3-92171		PIN,SNAP	ﾋﾟﾝ	2	A,B:125- C,D:226- [SCB001]
-	02200-02020		PIN,COTTER	ﾋﾟﾝ	2	A,B:1-124 C:1-225 [SCBCR]
-	216H3-92171		PIN,SNAP	ﾋﾟﾝ	2	A,B:125- C:226- [SCBCR]
6	02000-00008		WASHER	ﾜｯｼｬ	2	[SCB001]
-	02000-00008		WASHER	ﾜｯｼｬ	2	A,B,C [SCBCR]
7	216G6-52291		CAP	ｷｬｯﾌﾟ	6	[SCB001]
-	216G6-52291		CAP	ｷｬｯﾌﾟ	6	A,B,C [SCBCR]
8	22N56-43251		SPRING,LEAF	ｽﾌﾟﾘﾝｸﾞ	1	[SCB001]
-	22N56-43251		SPRING,LEAF	ｽﾌﾟﾘﾝｸﾞ	1	A,B,C [SCBCR]
9	01183-08012		BOLT	ﾎﾞﾙﾄ	1	[SCB001]
-	01183-08012		BOLT	ﾎﾞﾙﾄ	1	A,B,C [SCBCR]
10	52N55-32311		RUBBER,FOAM,LH	ﾗﾊﾞｰ	1	[SCB001]
-	52N55-32311		RUBBER,FOAM,LH	ﾗﾊﾞｰ	1	A,B,C [SCBCR]
11	52N55-32301		RUBBER,FOAM,RH	ﾗﾊﾞｰ	1	[SCB001]
-	52N55-32301		RUBBER,FOAM,RH	ﾗﾊﾞｰ	1	A,B,C [SCBCR]
12	209P6-42831		EDGING,L=50	ｴｯｼﾞﾝｸﾞ	4	[SCB001]
-	209P6-42831		EDGING,L=50	ｴｯｼﾞﾝｸﾞ	4	A,B,C [SCBCR]
13	01185-08025		BOLT	ﾎﾞﾙﾄ	6	[SCB001]
-	01185-08025		BOLT	ﾎﾞﾙﾄ	6	A,B,C [SCBCR]

FIG.161 FRONT SIDE COVER

(F70364C0) フロントサイドカバー

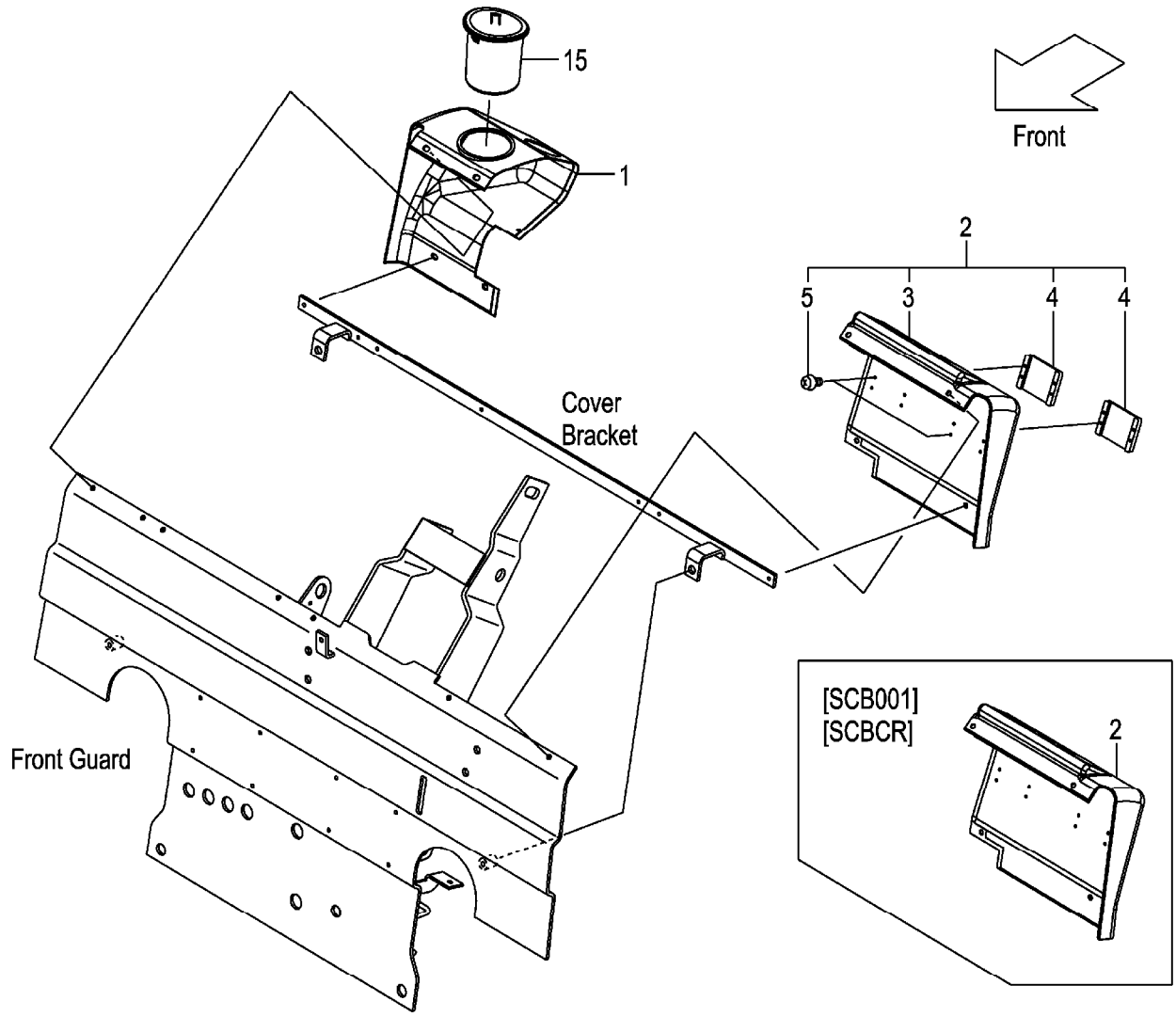

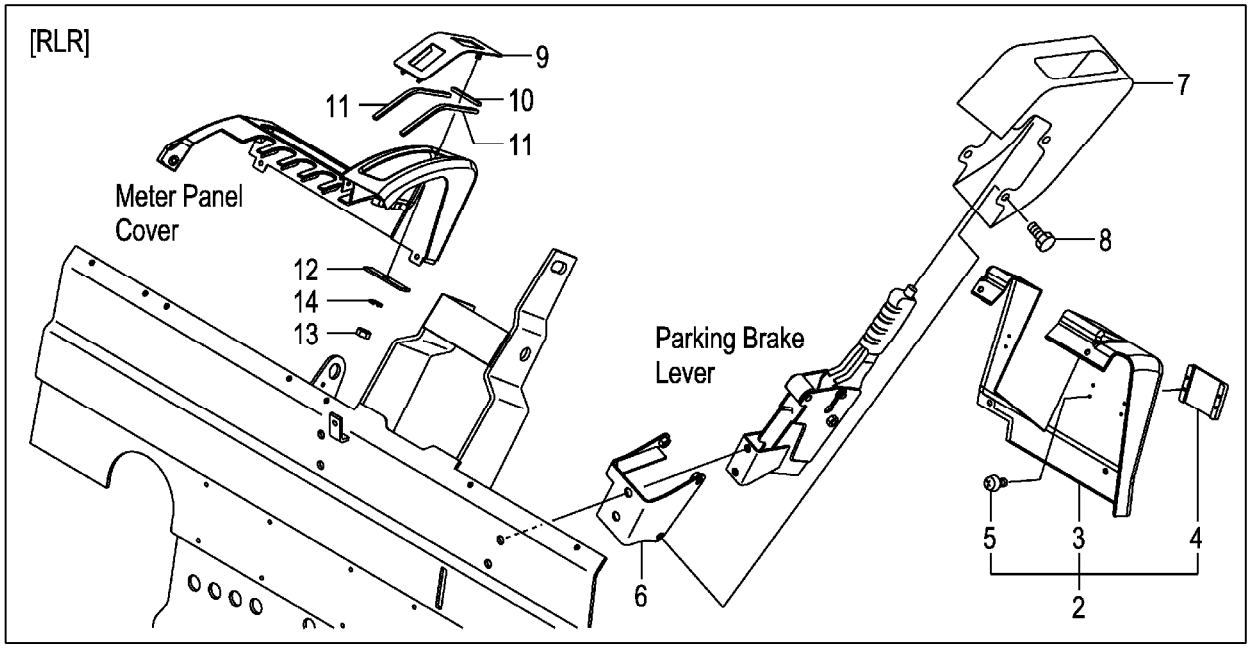

A:FG30C3 FG30T3 C:FD30C3 FD30T3
B:FG30W3 D:FD30W3

Item No	Part No.	Mark	Description		Req'd	Remarks : Serial No.
1	22N56-42711		COVER,RH	ｶﾊﾞｰ	1	
-	22N56-43411		COVER,RH	ｶﾊﾞｰ	1	[TTM][TPM]
-	52N55-32141		COVER,RH	ｶﾊﾞｰ	1	[SCB001]
-	52N55-32141		COVER,RH	ｶﾊﾞｰ	1	A,B,C
						[SCBCR]
-	52N55-32401		COVER,RH	ｶﾊﾞｰ	1	[TTM/SCB001][TPM/SCB001]
-	52N55-32401		COVER,RH	ｶﾊﾞｰ	1	A,B,C
						[TTM/SCBCR][TPM/SCBCR]
2	22N56-42851		COVER,LH	ｶﾊﾞｰ	1	INC.3-5
-	22N56-43021		COVER,LH	ｶﾊﾞｰ	1	[RWL/BB SW/LPG]
						[RWL/BBASW/LPG] INC.3-5
-	22N56-43021		COVER,LH	ｶﾊﾞｰ	1	[RWL/BB SW/AW071]
						[RWL/BBASW/AW071] INC.3-5
-	22N56-43021		COVER,LH	ｶﾊﾞｰ	1	[RWL/LPG/AW071] INC.3-5
-	22N56-43021		COVER,LH	ｶﾊﾞｰ	1	[BB SW/LPG/AW071]
						[BBASW/LPG/AW071] INC.3-5
-	22N56-43031		COVER,LH	ｶﾊﾞｰ	1	[AM][TTM/TPM] INC.3-5
-	52E00-52191		COVER,LH	ｶﾊﾞｰ	1	[LPG/LPGL] INC.3-5
-	52N55-40411		COVER,LH	ｶﾊﾞｰ	1	[AW071/WAS071] INC.3-5
-	52N55-42251		COVER,LH	ｶﾊﾞｰ	1	[SCB001]
-	52N55-42251		COVER,LH	ｶﾊﾞｰ	1	A,B,C
						[SCBCR]
-	52N55-32411		COVER,LH	ｶﾊﾞｰ	1	[AM/SCB001][TTM/TPM/SCB001]
-	52N55-32411		COVER,LH	ｶﾊﾞｰ	1	A,B,C
						[AM/SCBCR][TTM/TPM/SCBCR]
-	22N56-43771		COVER,LH	ｶﾊﾞｰ	1	[PLR] INC.3-5
3	22N56-42721		COVER,LH	ｶﾊﾞｰ	1	(WITHOUT SCB001,SCBCR)
-	22N56-43421		COVER,LH	ｶﾊﾞｰ	1	[RWL/BB SW/LPG]
						[RWL/BBASW/LPG]
-	22N56-43421		COVER,LH	ｶﾊﾞｰ	1	[RWL/BB SW/AW071]
						[RWL/BBASW/AW071]
-	22N56-43421		COVER,LH	ｶﾊﾞｰ	1	[RWL/LPG/AW071]
-	22N56-43421		COVER,LH	ｶﾊﾞｰ	1	[BB SW/LPG/AW071]
						[BBASW/LPG/AW071]
-	22N56-43431		COVER,LH	ｶﾊﾞｰ	1	[AM][TTM/TPM]
-	52E00-52201		COVER,LH	ｶﾊﾞｰ	1	[LPG/LPGL]
-	52N55-40081		COVER,LH	ｶﾊﾞｰ	1	[AW071/WAS071]
-	22N56-43871		COVER,LH	ｶﾊﾞｰ	1	[PLR]
4	22N56-42811		COVER	ｶﾊﾞｰ	2	(WITHOUT SCB001,SCBCR)
-	22N56-42811		COVER	ｶﾊﾞｰ	1	[PLR]
5	214A6-42781		SCREW	ｽｸﾘｭ	8	(WITHOUT SCB001,SCBCR)
-	214A6-42781		SCREW	ｽｸﾘｭ	4	[PLR]
6	22N56-43801		BRACKET	ﾌﾞﾗｹｯﾄ	1	[PLR]
7	22N56-43831		COVER,PLR	ｶﾊﾞｰ	1	[PLR]
8	01185-08015		BOLT	ﾎﾞﾙﾄ	3	[PLR]
9	22N56-43881		COVER,PLR	ｶﾊﾞｰ	1	[PLR]
10	22N56-43911		RUBBER	ﾗﾊﾞｰ	1	[PLR]
11	22N56-43921		RUBBER	ﾗﾊﾞｰ	2	[PLR]
12	22N56-43931		PLATE	ﾌﾟﾚｰﾄ	1	[PLR]
13	01400-00006		NUT	ﾅｯﾄ	1	[PLR]

FIG.161 FRONT SIDE COVER

(F70364C0) フロントサイドカバー

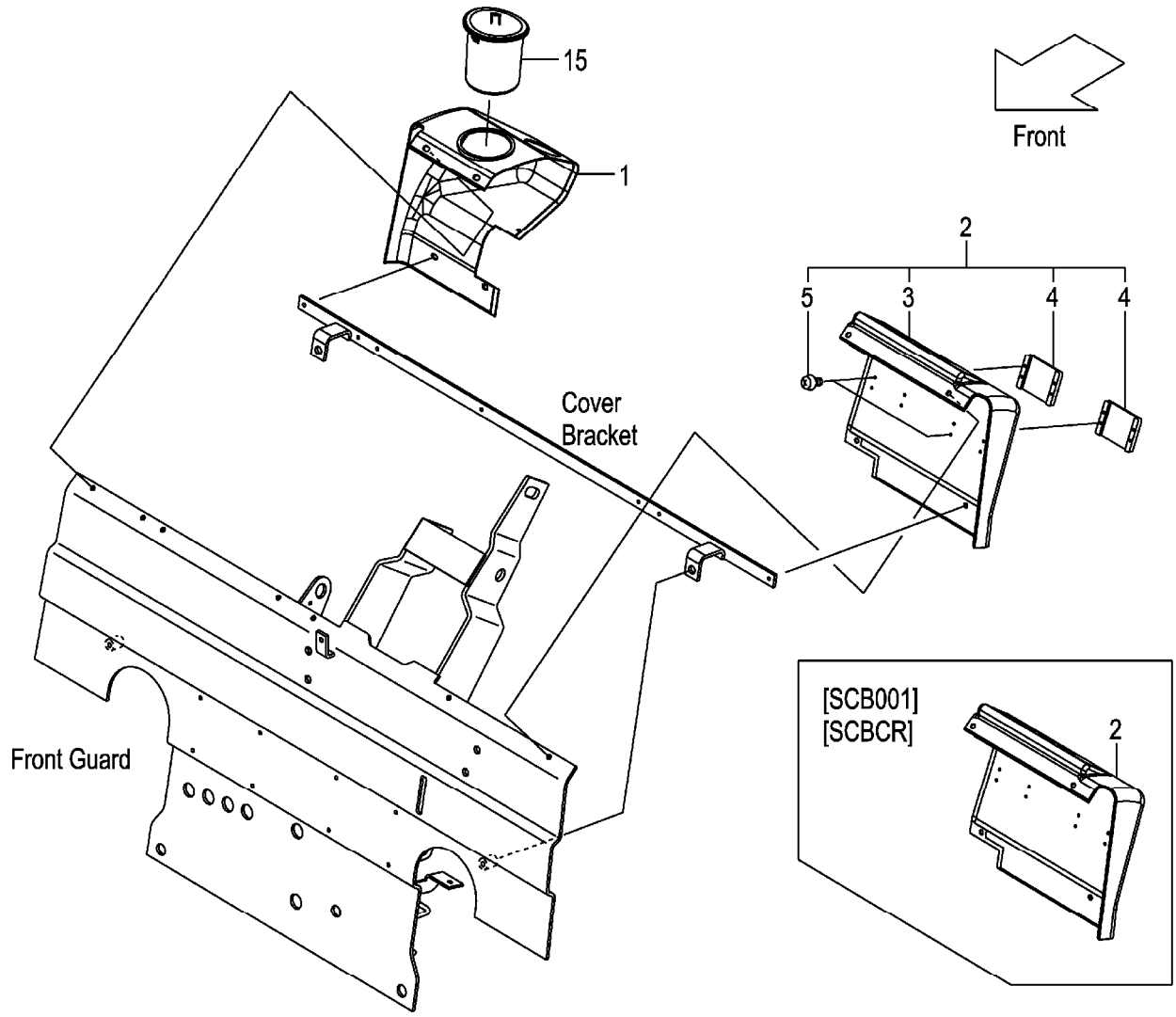

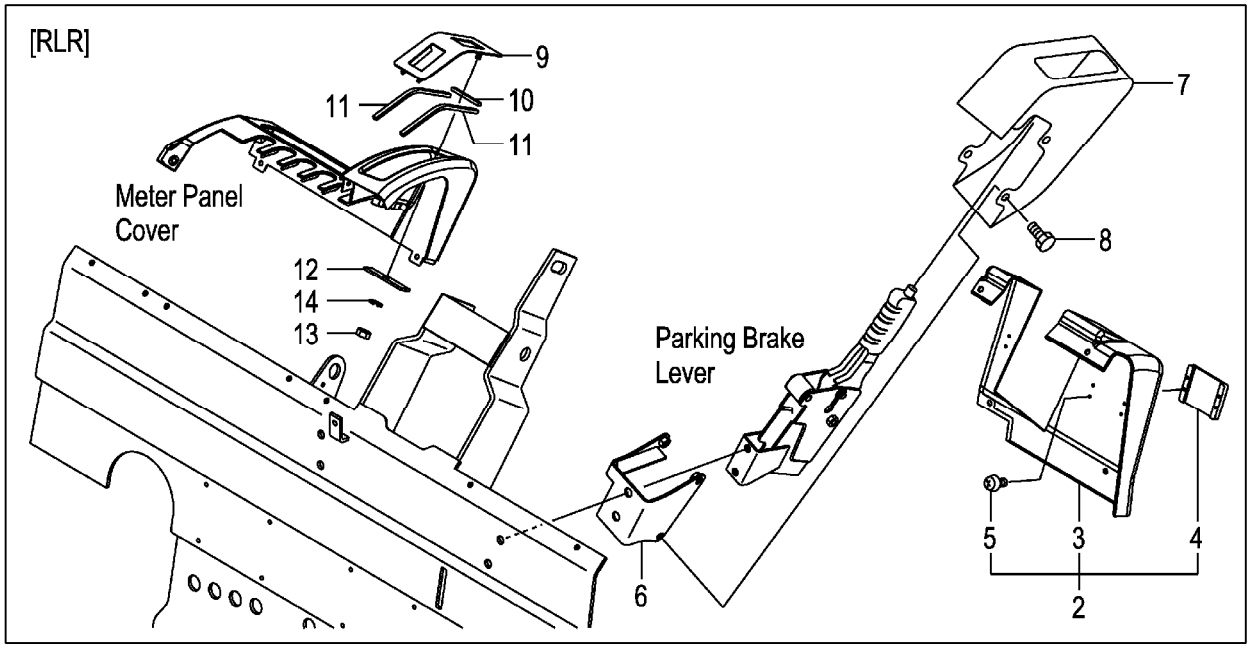

A:FG30C3 FG30T3 C:FD30C3 FD30T3
B:FG30W3 D:FD30W3

Item No	Part No.	Mark	Description	Req'd	Remarks : Serial No.
14	02010-00006		WASHER ﾜｯｼｬ	1	[PLR]
15	22N56-42761		CUP,HOLDER ｶｯﾌﾟ	1	(WITHOUT SM)

M E M O

M E M O

FIG.162 SEAT

(F7036810) シート

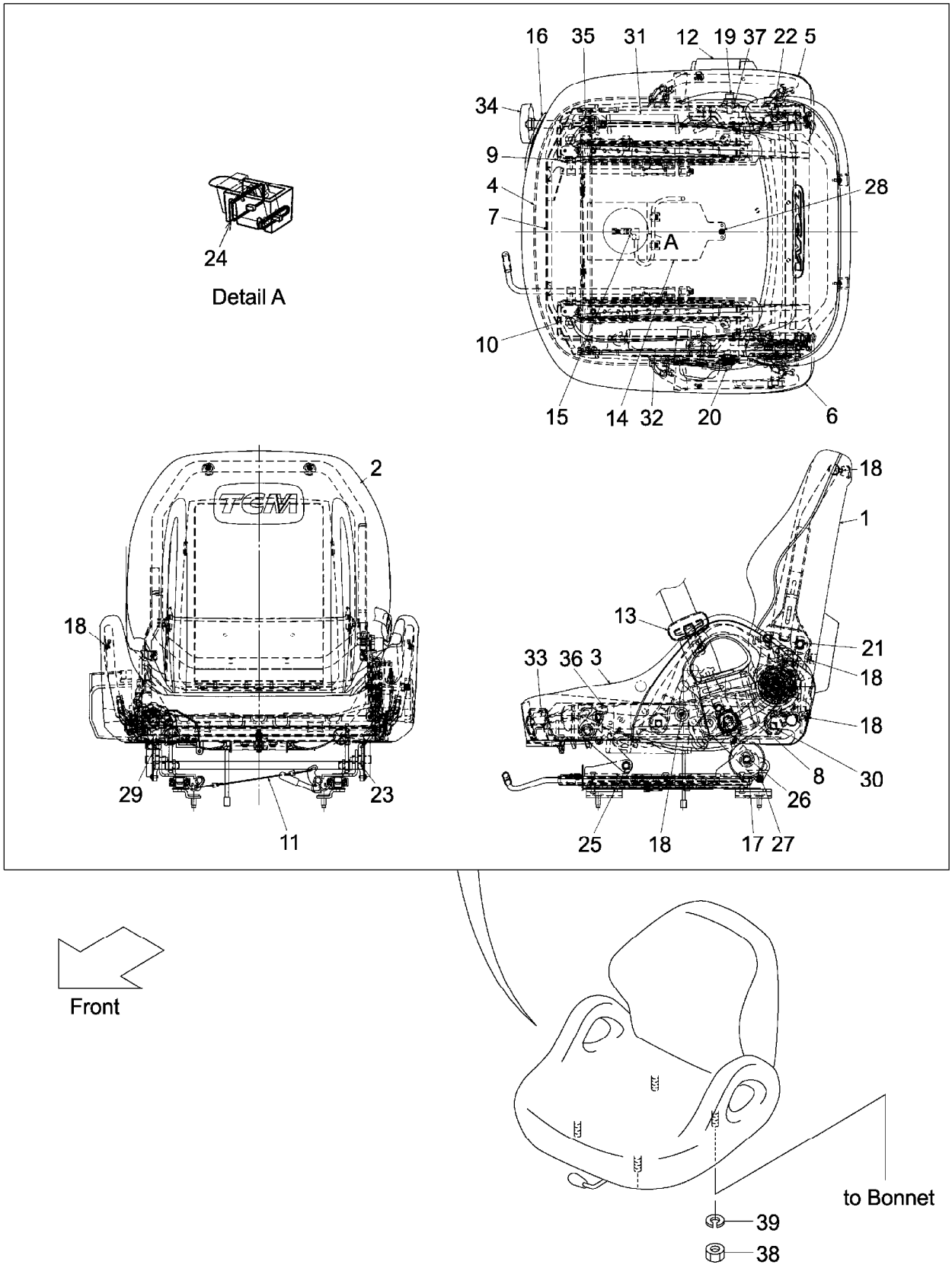

A:FG30C3 FG30T3 C:FD30C3 FD30T3
B:FG30W3 D:FD30W3

Item No	Part No.	Mark	Description		Req'd	Remarks : Serial No.
A1	242F6-80101		SEAT-ASSY	ｼｰﾄｱｯｾﾝ	1	INC.1-13,16-23,25-37
-	542F3-80101		SEAT-ASSY	ｼｰﾄｱｯｾﾝ	1	(SEAT SW) INC.1-37
-	52N56-22201		SEAT-ASSY	ｼｰﾄｱｯｾﾝ	1	[OKM][SIL] INC.1-37
-	52N56-22201		SEAT-ASSY	ｼｰﾄｱｯｾﾝ	1	A,C
						[EXE][EXN] INC.1-37
1	242F6-82001		BOARD,SEAT-BACK	ﾎﾞｰﾄﾞ	1	
2	242F6-82011		PAD,SEAT-BACK	ﾊﾟｯﾄﾞ	1	
3	242F6-82021		PAD,SEAT-CUSHION	ﾊﾟｯﾄﾞ	1	
4	242F6-82031		PANEL,SEAT-CUSHION	ﾊﾟﾈﾙ	1	
5	242F6-82041		SHIELD,RH	ｼｰﾙﾄﾞ	1	
6	242F6-82051		SHIELD,LH	ｼｰﾙﾄﾞ	1	
7	242F6-82061		FRAME	ﾌﾚｰﾑ	1	
8	242F6-82071		LEVER	ﾚﾊﾞｰ	1	
9	242F6-82081		TRACK,RH	ﾄﾗｯｸ	1	
10	242F6-82091		TRACK,LH	ﾄﾗｯｸ	1	
11	242F6-82101		WIRE	ﾜｲﾔ	1	
12	242F6-82111		BELT,SEAT,OUTER	ﾍﾞﾙﾄ	1	
13	242F6-82121		BELT,SEAT,INNER	ﾍﾞﾙﾄ	1	
14	542F3-82001		PLATE,SEAT-CUSHION	ﾌﾟﾚｰﾄ	1	[OKM][SIL](SEAT SW)
-	542F3-82001		PLATE,SEAT-CUSHION	ﾌﾟﾚｰﾄ	1	A,C
						[EXE][EXN]
15	542F3-82011		SWITCH,SEAT	ｽｲｯﾁ	1	[OKM][SIL](SEAT SW)
-	542F3-82011		SWITCH,SEAT	ｽｲｯﾁ	1	A,C
						[EXE][EXN]
16	242F6-82131		CONTROL,SUSPENSION	ｺﾝﾄﾛｰﾙ	1	
17	242F6-82141		ABSORBER,SUSPENSION	ｱﾌﾞｿｰﾊﾞ	2	
18	242F6-82151		SCREW	ｽｸﾘｭ	10	
19	242F6-82161		BOLT	ﾎﾞﾙﾄ	1	
20	242F6-82171		BOLT	ﾎﾞﾙﾄ	1	
21	242F6-82181		BOLT	ﾎﾞﾙﾄ	2	
22	242F6-82191		BOLT	ﾎﾞﾙﾄ	1	
23	242F6-82201		COLLAR	ｶﾗｰ	4	
24	542F3-82021		CLAMP	ｸﾗﾝﾌﾟ	2	[OKM][SIL](SEAT SW)
-	542F3-82021		CLAMP	ｸﾗﾝﾌﾟ	2	A,C
						[EXE][EXN]
25	242F6-82211		BOLT	ﾎﾞﾙﾄ	2	
26	242F6-82221		BOLT	ﾎﾞﾙﾄ	2	
27	242F6-82231		SCREW	ｽｸﾘｭ	4	
28	242F6-82241		SCREW	ｽｸﾘｭ	1	[OKM][SIL](SEAT SW)
-	242F6-82241		SCREW	ｽｸﾘｭ	1	A,C
						[EXE][EXN]
29	242F6-82251		SCREW	ｽｸﾘｭ	2	
30	242F6-82261		BOLT	ﾎﾞﾙﾄ	4	
31	242F6-82271		SPRING,TENSION	ｽﾌﾟﾘﾝｸﾞ	1	
32	242F6-82281		SPRING,TENSION	ｽﾌﾟﾘﾝｸﾞ	1	
33	242F6-82291		SHAFT,SUS-CONTROL	ｼｬﾌﾄ	1	
34	242F6-82301		HANDLE,SUS-CONTROL	ﾊﾝﾄﾞﾙ	1	
35	242F6-82311		PIN	ﾋﾟﾝ	1	
36	242F6-82321		NUT	ﾅｯﾄ	1	
37	242F6-82331		WASHER	ﾜｯｼｬ	1	

FIG.162 SEAT

(F7036810) シート

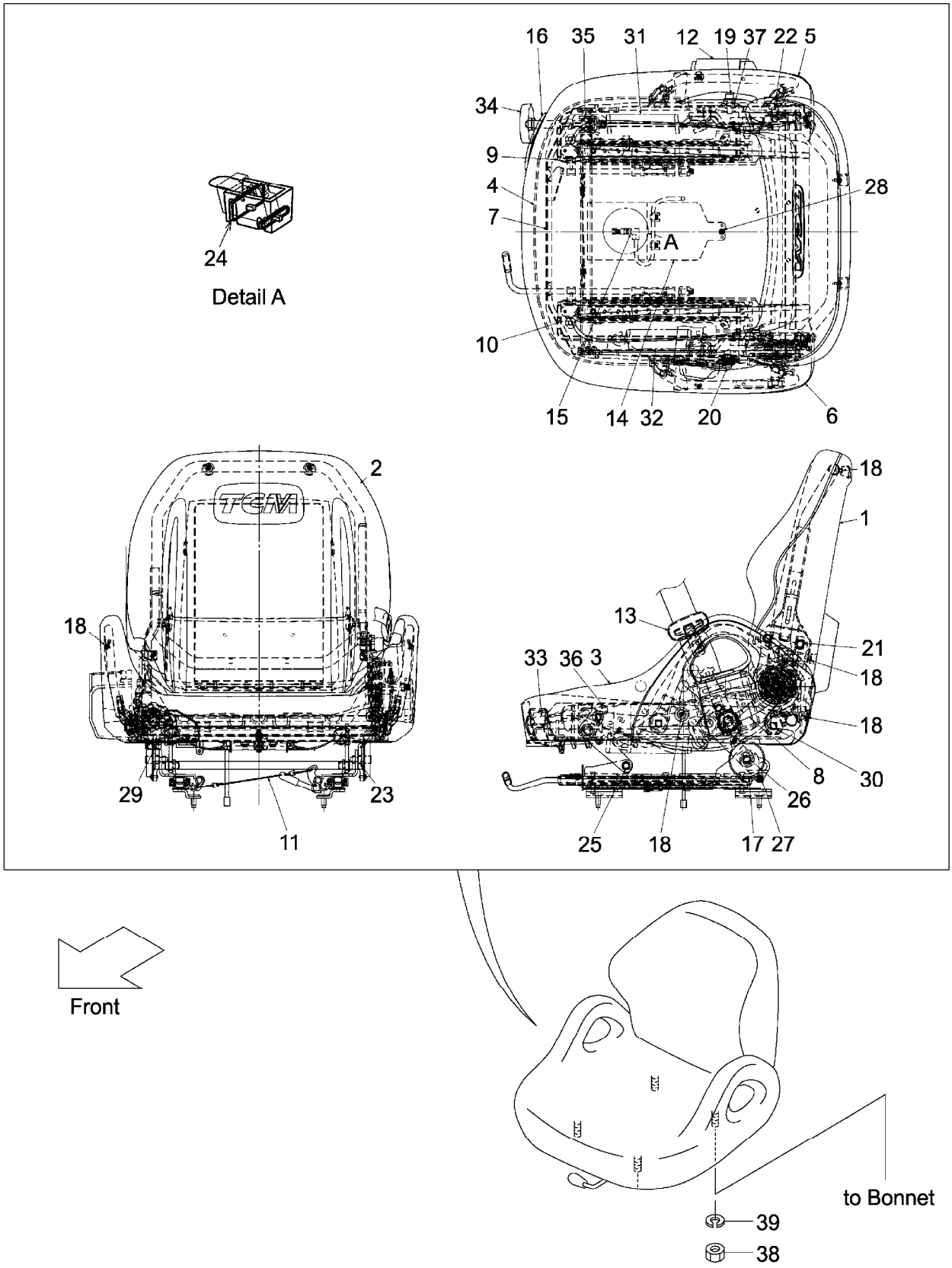

A:FG30C3 FG30T3 C:FD30C3 FD30T3
B:FG30W3 D:FD30W3

Item No	Part No.	Mark	Description	Req'd	Remarks : Serial No.
38	01400-00008		NUT ナット	4	
39	02010-00008		WASHER ワッシャ	4	

M E M O

M E M O

FIG.163 SEAT [HGL]

(F7036820) シート

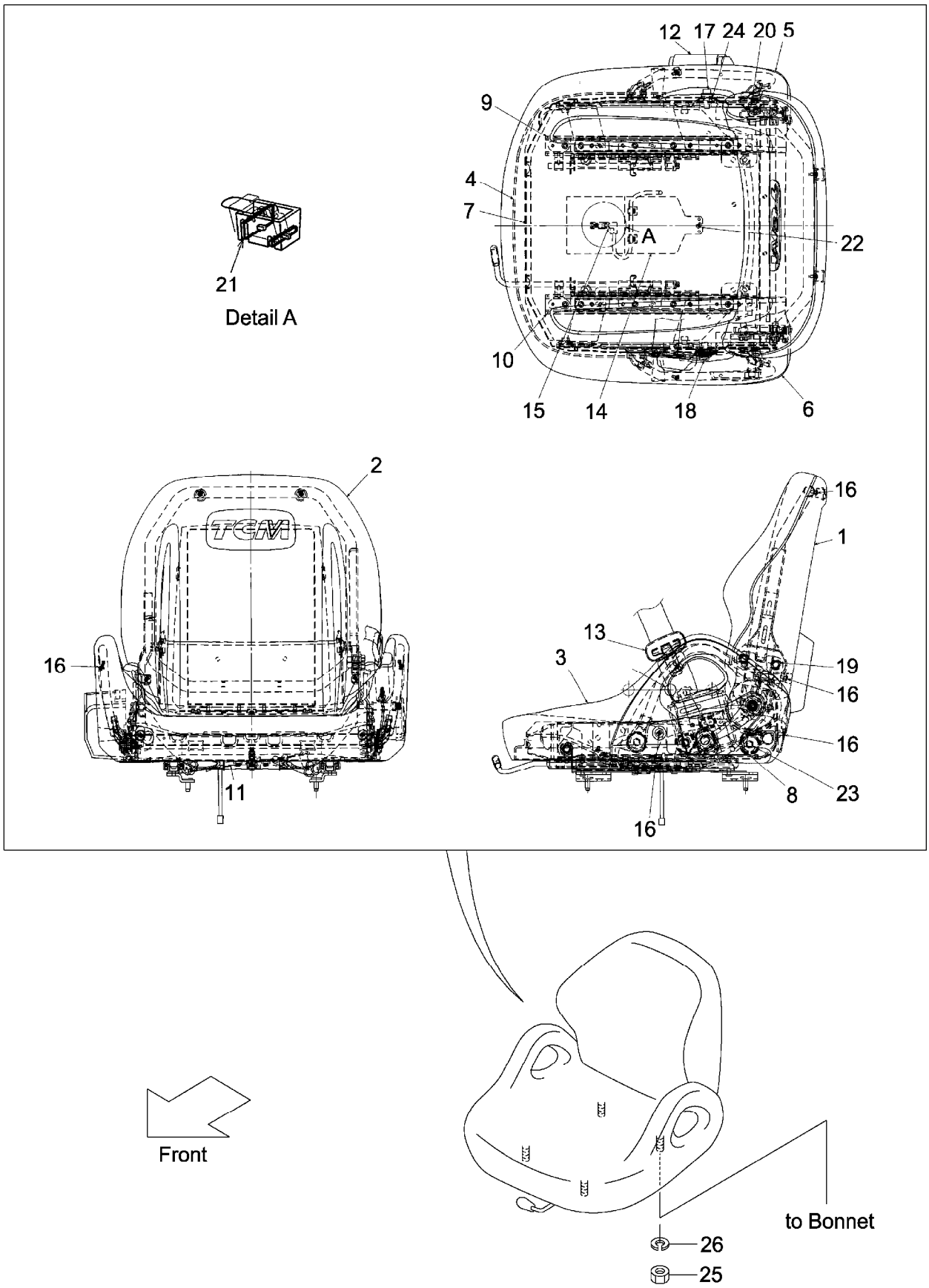

A:FG30C3 FG30T3 FG30W3
B:FD30C3 FD30T3 FD30W3

Item No	Part No.	Mark	Description		Req'd	Remarks : Serial No.
A1	242F6-80201		SEAT-ASSY	ｼｰﾄｱｯｾﾝ	1	[HGL] INC.1-13,16-20,23,24
-	542F3-80201		SEAT-ASSY	ｼｰﾄｱｯｾﾝ	1	[HGL](SEAT SW) INC.1-24
1	242F6-82001		BOARD,SEAT-BACK	ﾎﾞｰﾄﾞ	1	[HGL]
2	242F6-82011		PAD,SEAT-BACK	ﾊﾟｯﾄﾞ	1	[HGL]
3	242F6-82341		PAD,SEAT-CUSHION	ﾊﾟｯﾄﾞ	1	[HGL]
4	242F6-82031		PANEL,SEAT-CUSHION	ﾊﾟﾈﾙ	1	[HGL]
5	242F6-82041		SHIELD,RH	ｼｰﾙﾄﾞ	1	[HGL]
6	242F6-82051		SHIELD,LH	ｼｰﾙﾄﾞ	1	[HGL]
7	242F6-82351		FRAME	ﾌﾚｰﾑ	1	[HGL]
8	242F6-82071		LEVER	ﾚﾊﾞｰ	1	[HGL]
9	242F6-82361		TRACK,RH	ﾄﾗｯｸ	1	[HGL]
10	242F6-82371		TRACK,LH	ﾄﾗｯｸ	1	[HGL]
11	242F6-82101		WIRE	ﾜｲﾔ	1	[HGL]
12	242F6-82111		BELT,SEAT,OUTER	ﾍﾞﾙﾄ	1	[HGL]
13	242F6-82121		BELT,SEAT,INNER	ﾍﾞﾙﾄ	1	[HGL]
14	542F3-82001		PLATE,SEAT-CUSHION	ﾌﾟﾚｰﾄ	1	[HGL](SEAT SW)
15	542F3-82011		SWITCH,SEAT	ｽｲｯﾁ	1	[HGL](SEAT SW)
16	242F6-82151		SCREW	ｽｸﾘｭ	10	[HGL]
17	242F6-82161		BOLT	ﾎﾞﾙﾄ	1	[HGL]
18	242F6-82171		BOLT	ﾎﾞﾙﾄ	1	[HGL]
19	242F6-82181		BOLT	ﾎﾞﾙﾄ	2	[HGL]
20	242F6-82191		BOLT	ﾎﾞﾙﾄ	1	[HGL]
21	542F3-82021		CLAMP	ｸﾗﾝﾌﾟ	2	[HGL](SEAT SW)
22	242F6-82241		SCREW	ｽｸﾘｭ	1	[HGL](SEAT SW)
23	242F6-82261		BOLT	ﾎﾞﾙﾄ	4	[HGL]
24	242F6-82291		SHAFT,SUS-CONTROL	ｼｬﾌﾄ	1	[HGL]
25	01400-00008		NUT	ﾅｯﾄ	4	[HGL]
26	02010-00008		WASHER	ﾜｯｼｬ	4	[HGL]

FIG.164 PUMP UNIT (CLUTCH)(TOR-CON)

(F7037110) ﾎﾟﾝﾌﾟﾕﾆｯﾄ

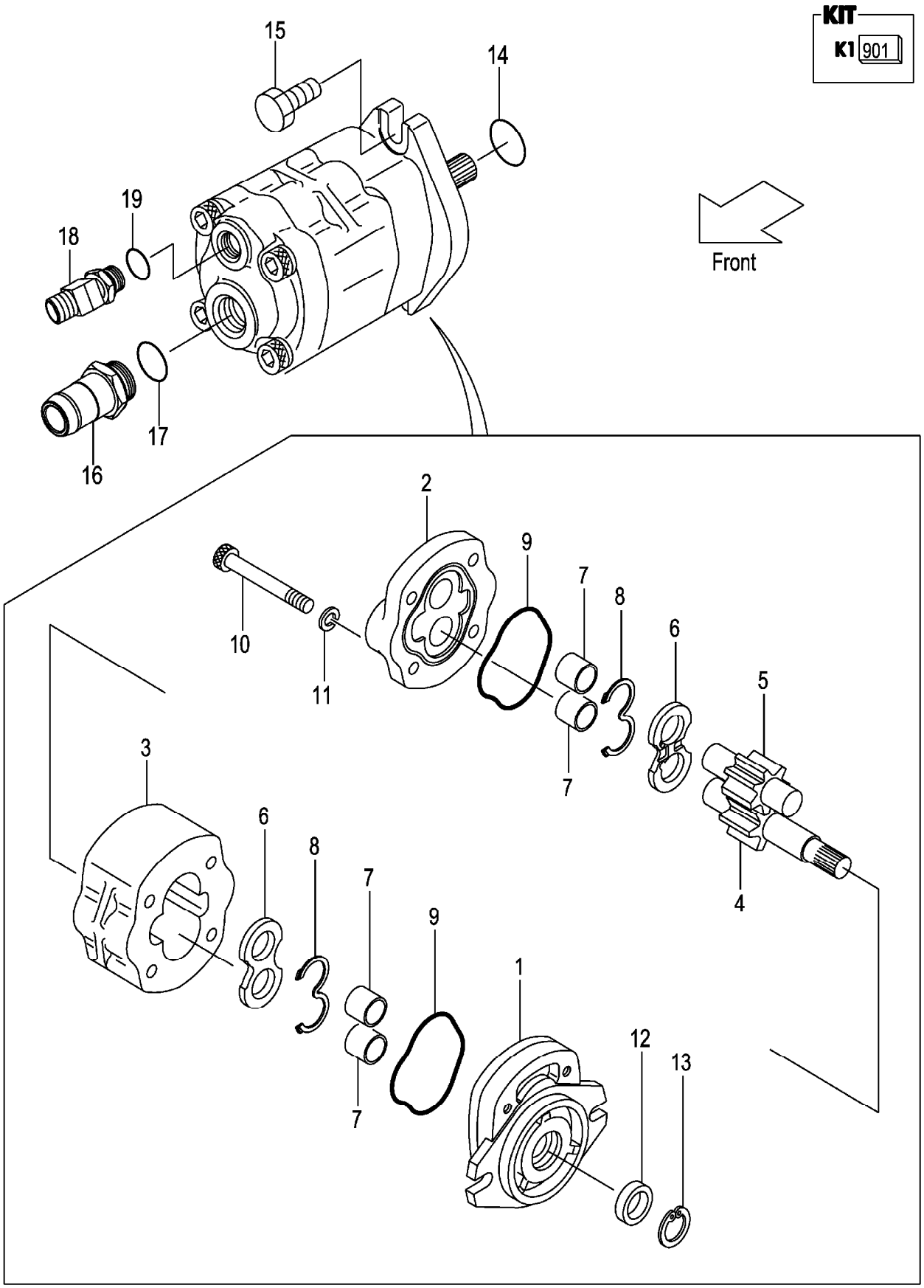

A:FG30C3 FG30T3
B:FD30C3 FD30T3

Item No	Part No.	Mark	Description		Req'd	Remarks : Serial No.
A1	134A7-10301		PUMP-ASSY,GEAR	ｷﾞﾔｰﾎﾟﾝﾌﾟｱｯｾﾝ	1	INC.1-13
901	110F7-12001	K1	KIT,REPAIR	ﾘﾍﾟｱｷｯﾄ	1	INC.8,9,12,13
1	NO PART NO.	#	COVER,FRONT	ｶﾊﾞｰ	1	
2	NO PART NO.	#	COVER,REAR	ｶﾊﾞｰ	1	
3	NO PART NO.	#	BODY	ﾎﾞﾃﾞｨ	1	
4	NO PART NO.	#	GEAR,DRIVE	ｷﾞﾔｰ	1	
5	NO PART NO.	#	GEAR,DRIVEN	ｷﾞﾔｰ	1	
6	NO PART NO.	#	PLATE,SIDE	ﾌﾟﾚｰﾄ	2	
7	NO PART NO.	#	BUSHING	ﾌﾞｯｼﾝｸﾞ	4	
8	NO PART NO.	#*	GASKET	ｶﾞｽｹｯﾄ	2	
9	NO PART NO.	#*	GASKET	ｶﾞｽｹｯﾄ	2	
10	R-402-65004-03		BOLT	ﾎﾞﾙﾄ	4	
11	R-402-00710-12		WASHER	ﾜｯｼｬ	4	
12	NO PART NO.	#*	SEAL,OIL	ｼｰﾙ	1	
13	NO PART NO.	#*	RING,SNAP	ｽﾅｯﾌﾟﾘﾝｸﾞ	1	
14	03340-00140		O-RING	Oﾘﾝｸﾞ	1	
15	01185-10055		BOLT	ﾎﾞﾙﾄ	2	
A2	225A7-62021		NIPPLE-ASSY	ﾆｯﾌﾟﾙｱｯｾﾝ	1	INC.16,17
16	NO PART NO.	#	NIPPLE	ﾆｯﾌﾟﾙ	1	
17	03320-00290		O-RING	Oﾘﾝｸﾞ	1	
A3	216M7-62101		ADAPTER-ASSY	ｱﾀﾞﾌﾟﾀｱｯｾﾝ	1	INC.18,19
18	NO PART NO.	#	ADAPTER	ｱﾀﾞﾌﾟﾀ	1	
19	03320-00180		O-RING	Oﾘﾝｸﾞ	1	

FIG.165 PUMP UNIT (OIL CLUTCH)

(F7037130) ﾎﾟﾝﾌﾟﾕﾆｯﾄ

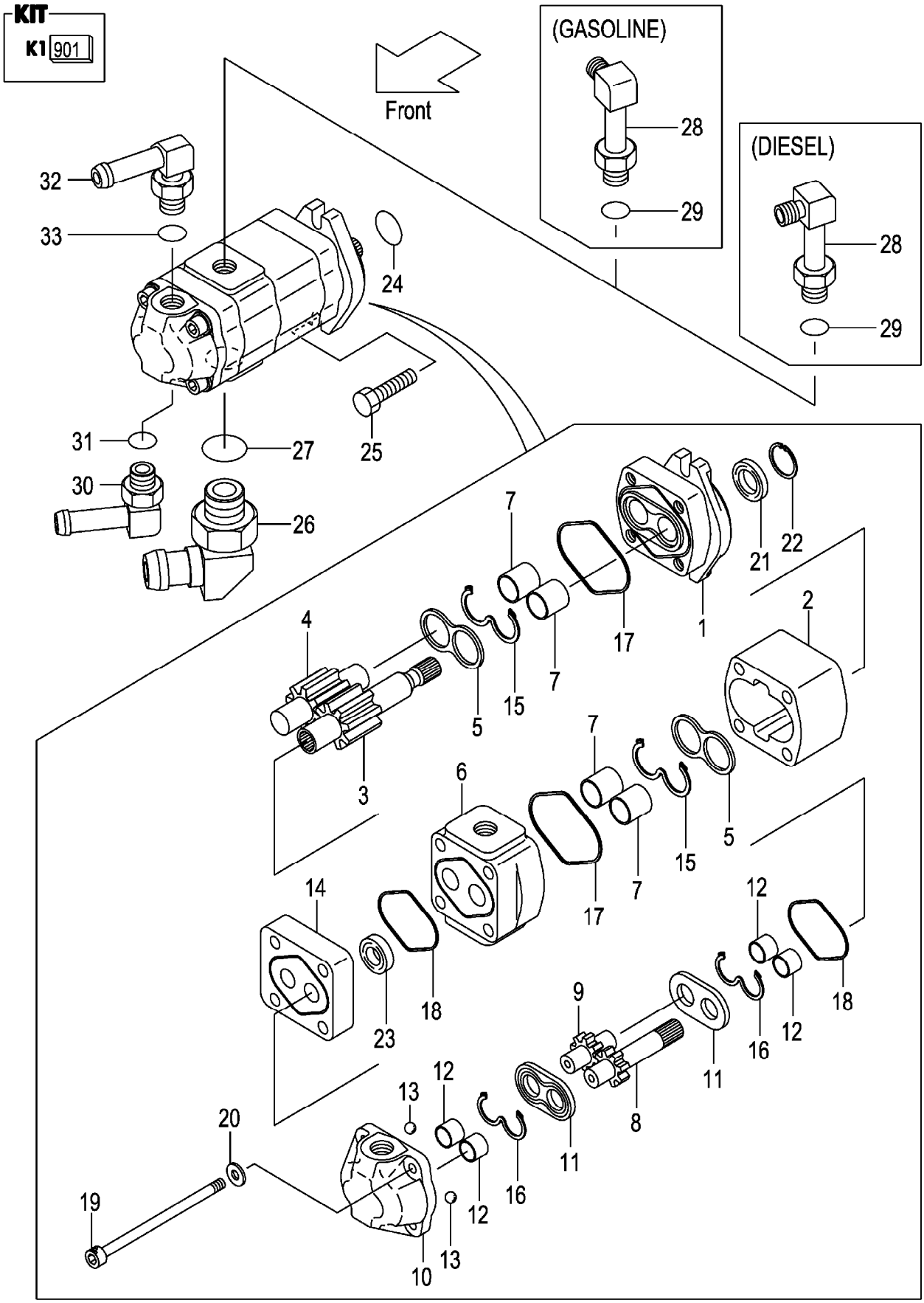

A:FG30W3
B:FD30W3

Item No	Part No.	Mark	Description		Req'd	Remarks : Serial No.
A1	134H7-10301		PUMP-ASSY,GEAR	ｷﾞﾔｰﾎﾟﾝﾌﾟｱｯｾﾝ	1	INC.1-23
901	R-403-24323	K1	KIT,SEAL	ｼｰﾙｷｯﾄ	1	INC.15-18,21,23
1	NO PART NO.	#	COVER,FRONT	ｶﾊﾞｰ	1	
2	NO PART NO.	#	BODY,1	ﾎﾞﾃﾞｨ	1	
3	NO PART NO.	#	GEAR,DRIVE,1	ｷﾞﾔｰ	1	
4	NO PART NO.	#	GEAR,DRIVEN,1	ｷﾞﾔｰ	1	
5	NO PART NO.	#	PLATE,SIDE,1	ﾌﾟﾚｰﾄ	2	
6	NO PART NO.	#	PLATE,ADAPTER	ﾌﾟﾚｰﾄ	1	
7	NO PART NO.	#	BUSHING,1	ﾌﾞｯｼﾝｸﾞ	4	
8	NO PART NO.	#	GEAR,DRIVE,2	ｷﾞﾔｰ	1	
9	NO PART NO.	#	GEAR,DRIVEN,2	ｷﾞﾔｰ	1	
10	NO PART NO.	#	BODY,2	ﾎﾞﾃﾞｨ	1	
11	NO PART NO.	#	PLATE,SIDE,2	ﾌﾟﾚｰﾄ	2	
12	NO PART NO.	#	BUSHING,2	ﾌﾞｯｼﾝｸﾞ	4	
13	NO PART NO.	#	BALL,STEEL	ﾎﾞｰﾙ	2	
14	NO PART NO.	#	SUB-PLATE,ADAPTER	ｻﾌﾞﾌﾟﾚｰﾄ	1	
15	NO PART NO.	#*	GASKET,1	ｶﾞｽｹｯﾄ	2	
16	NO PART NO.	#*	GASKET,2	ｶﾞｽｹｯﾄ	2	
17	NO PART NO.	#*	GASKET,1	ｶﾞｽｹｯﾄ	2	
18	NO PART NO.	#*	GASKET,2	ｶﾞｽｹｯﾄ	2	
19	R-402-65004-28		BOLT	ﾎﾞﾙﾄ	4	
20	R-402-00710-12		WASHER	ﾜｯｼｬ	4	
21	NO PART NO.	#*	SEAL,OIL	ｼｰﾙ	1	
22	NO PART NO.	#	RING,SNAP	ｽﾅｯﾌﾟﾘﾝｸﾞ	1	
23	NO PART NO.	#*	SEAL,OIL	ｼｰﾙ	1	
24	03340-00140		O-RING	Oﾘﾝｸﾞ	1	
25	01185-10055		BOLT	ﾎﾞﾙﾄ	2	
A2	239H7-60201		ELBOW-ASSY	ｴﾙﾎﾞｱｯｾﾝ	1	INC.26,27
26	NO PART NO.	#	ELBOW	ｴﾙﾎﾞ	1	
27	03320-00290		O-RING	Oﾘﾝｸﾞ	1	
A3	04150-20404		ELBOW-ASSY	ｴﾙﾎﾞｱｯｾﾝ	1	INC.28,29
28	NO PART NO.	#	ELBOW	ｴﾙﾎﾞ	1	
29	03320-00180		O-RING	Oﾘﾝｸﾞ	1	
A4	234H7-62351		FITTING-ASSY,HOSE	ﾎｰｽﾌｨｯﾃｨﾝｸﾞｱｯｾﾝ	1	INC.30,31
30	NO PART NO.	#	FITTING,HOSE	ﾌｨｯﾃｨﾝｸﾞ	1	
31	03320-00180		O-RING	Oﾘﾝｸﾞ	1	
A5	234H7-62301		FITTING-ASSY,HOSE	ﾎｰｽﾌｨｯﾃｨﾝｸﾞｱｯｾﾝ	1	INC.32,33
32	NO PART NO.	#	FITTING,HOSE	ﾌｨｯﾃｨﾝｸﾞ	1	
33	03320-00180		O-RING	Oﾘﾝｸﾞ	1	

FIG.166 CONTROL VALVE [2SV]

(F7037310) ｺﾝﾄﾛｰﾙﾊﾞﾙﾌﾞ

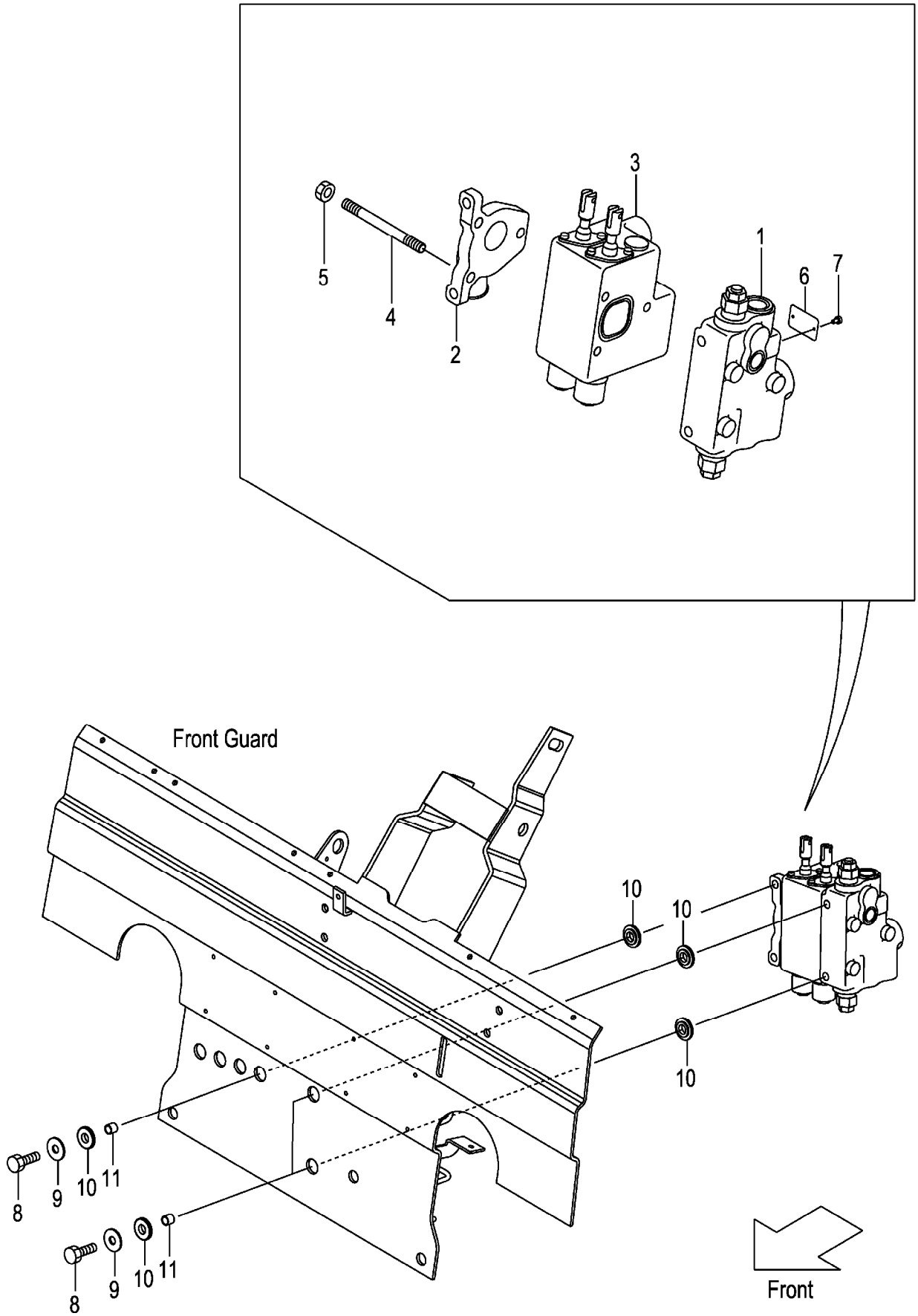

A:FG30C3 D:FD30C3
B:FG30T3 E:FD30T3
C:FG30W3 F:FD30W3

FIG.166
(F7037310)

Item No	Part No.	Mark	Description		Req'd	Remarks : Serial No.
A1	22N57-30221		VALVE-ASSY,CONTROL	ｺﾝﾄﾛｰﾙﾊﾞﾙﾌﾞｱｯｾﾝ	1	INC.1-7
-	52N54-60221		VALVE-ASSY,CONTROL	ｺﾝﾄﾛｰﾙﾊﾞﾙﾌﾞｱｯｾﾝ	1	[VLS] INC.1-7
-	22N57-30321		VALVE-ASSY,CONTROL	ｺﾝﾄﾛｰﾙﾊﾞﾙﾌﾞｱｯｾﾝ	1	[VLL][SIL] INC.1-7
-	22N57-30321		VALVE-ASSY,CONTROL	ｺﾝﾄﾛｰﾙﾊﾞﾙﾌﾞｱｯｾﾝ	1	A,B,D,E
						[EXE][EXN] INC.1-7
1	B-402-36066		COVER,FRONT	ｶﾊﾞｰ	1	
-	B-402-36067		COVER,FRONT	ｶﾊﾞｰ	1	[VLS][VLL][SIL]
-	B-402-36067		COVER,FRONT	ｶﾊﾞｰ	1	A,B,D,E
						[EXE][EXN]
2	B-402-36603		COVER,REAR	ｶﾊﾞｰ	1	
-	B-402-36151		COVER,REAR	ｶﾊﾞｰ	1	[VLL][SIL]
-	B-402-36151		COVER,REAR	ｶﾊﾞｰ	1	A,B,D,E
						[EXE][EXN]
3	B-402-37129		VALVE,COMBINATION	ﾊﾞﾙﾌﾞ	1	
-	B-402-37128		VALVE,COMBINATION	ﾊﾞﾙﾌﾞ	1	[VLL][SIL]
-	B-402-37128		VALVE,COMBINATION	ﾊﾞﾙﾌﾞ	1	A,B,D,E
						[EXE][EXN]
4	B-402-30905-02		BOLT,STUD	ﾎﾞﾙﾄ	3	
5	B-023-06632-41		NUT	ﾅｯﾄ	3	
6	B-402-00704-13		PLATE,NAME	ﾌﾟﾚｰﾄ	1	
7	B-026-50103		RIVET	ﾘﾍﾞｯﾄ	2	
8	22N57-32041		BOLT	ﾎﾞﾙﾄ	3	
9	216G7-32021		WASHER,PLANE	ﾜｯｼｬ	3	
10	22N57-42201		RUBBER,VALVE	ﾗﾊﾞｰ	6	
11	22N57-42211		COLLAR	ｶﾗｰ	3	

FIG.167 CONTROL VALVE [3SV]

(F7037320) ｺﾝﾄﾛｰﾙﾊﾞﾙﾌﾞ

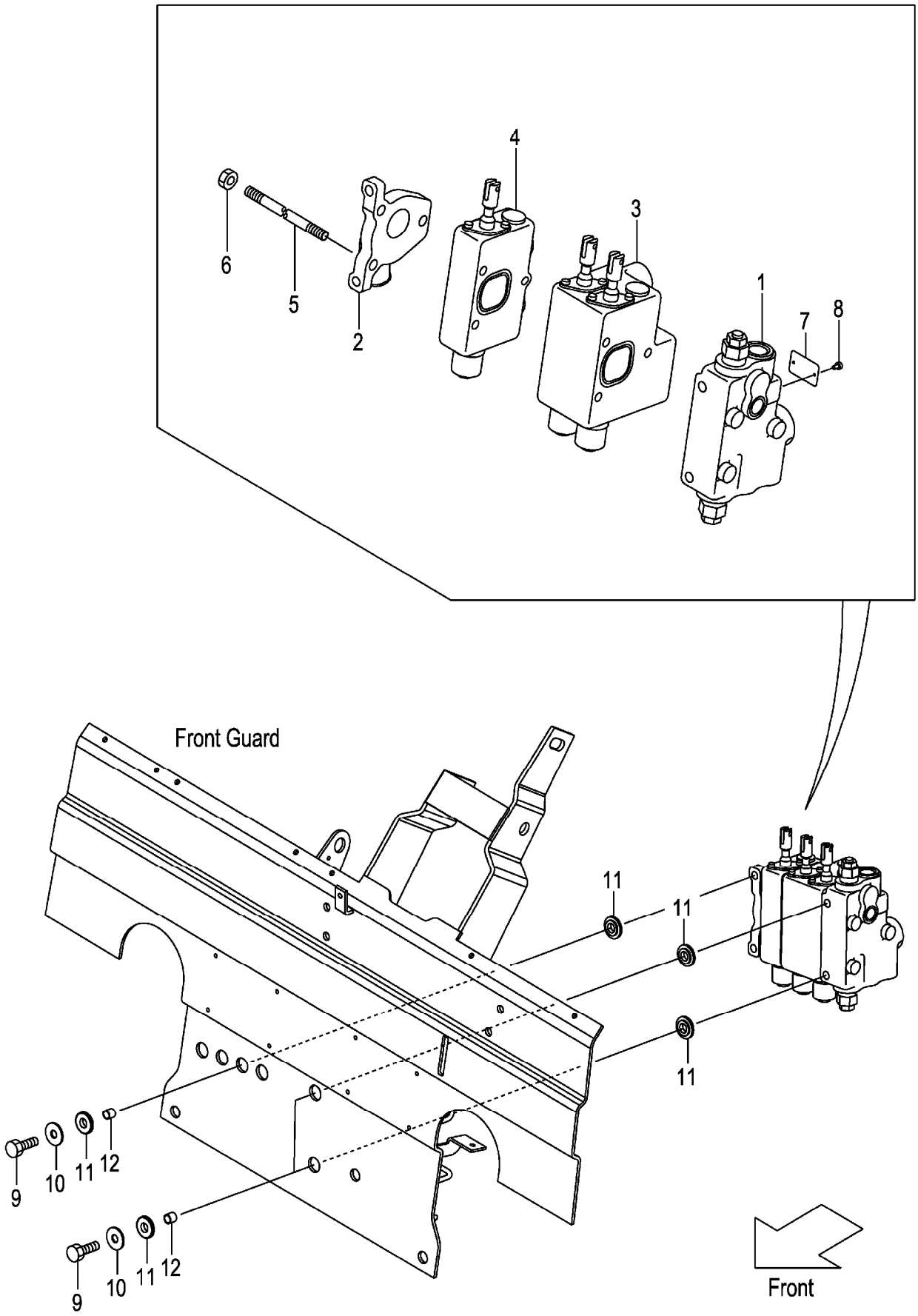

A:FG30C3 D:FD30C3
B:FG30T3 E:FD30T3
C:FG30W3 F:FD30W3

FIG.167
(F7037320)

Item No	Part No.	Mark	Description		Req'd	Remarks : Serial No.
A1	22N57-30231		VALVE-ASSY,CONTROL	ｺﾝﾄﾛｰﾙﾊﾞﾙﾌﾞｱｯｾﾝ	1	[3SV] INC.1-8
-	52N54-60231		VALVE-ASSY,CONTROL	ｺﾝﾄﾛｰﾙﾊﾞﾙﾌﾞｱｯｾﾝ	1	[3SV/VLS] INC.1-8
-	22N57-30331		VALVE-ASSY,CONTROL	ｺﾝﾄﾛｰﾙﾊﾞﾙﾌﾞｱｯｾﾝ	1	[3SV/VLL][3SV/SIL] INC.1-8
-	22N57-30331		VALVE-ASSY,CONTROL	ｺﾝﾄﾛｰﾙﾊﾞﾙﾌﾞｱｯｾﾝ	1	A,B,D,E
						[3SV/EXE][3SV/EXN] INC.1-8
1	B-402-36066		COVER,FRONT	ｶﾊﾞｰ	1	[3SV]
-	B-402-36067		COVER,FRONT	ｶﾊﾞｰ	1	[3SV/VLS][3SV/VLL][3SV/SIL]
-	B-402-36067		COVER,FRONT	ｶﾊﾞｰ	1	A,B,D,E
						[3SV/EXE][3SV/EXN]
2	B-402-36603		COVER,REAR	ｶﾊﾞｰ	1	[3SV]
-	B-402-36151		COVER,REAR	ｶﾊﾞｰ	1	[3SV/VLL][3SV/SIL]
-	B-402-36151		COVER,REAR	ｶﾊﾞｰ	1	A,B,D,E
						[3SV/EXE][3SV/EXN]
3	B-402-37129		VALVE,COMBINATION	ﾊﾞﾙﾌﾞ	1	[3SV]
-	B-402-37128		VALVE,COMBINATION	ﾊﾞﾙﾌﾞ	1	[3SV/VLL][3SV/SIL]
-	B-402-37128		VALVE,COMBINATION	ﾊﾞﾙﾌﾞ	1	A,B,D,E
						[3SV/EXE][3SV/EXN]
4	B-402-36924		VALVE,SECTION	ﾊﾞﾙﾌﾞ	1	[3SV]
5	B-402-30905-03		BOLT,STUD	ﾎﾞﾙﾄ	3	[3SV]
6	B-023-06632-41		NUT	ﾅｯﾄ	3	[3SV]
7	B-402-00704-13		PLATE,NAME	ﾌﾟﾚｰﾄ	1	[3SV]
8	B-026-50103		RIVET	ﾘﾍﾞｯﾄ	2	[3SV]
9	22N57-32041		BOLT	ﾎﾞﾙﾄ	3	[3SV]
10	216G7-32021		WASHER,PLANE	ﾜｯｼｬ	3	[3SV]
11	22N57-42201		RUBBER,VALVE	ﾗﾊﾞｰ	6	[3SV]
12	22N57-42211		COLLAR	ｶﾗｰ	3	[3SV]

FIG.168 CONTROL VALVE [4SV]

(F7037330) ｺﾝﾄﾛｰﾙﾊﾞﾙﾌﾞ

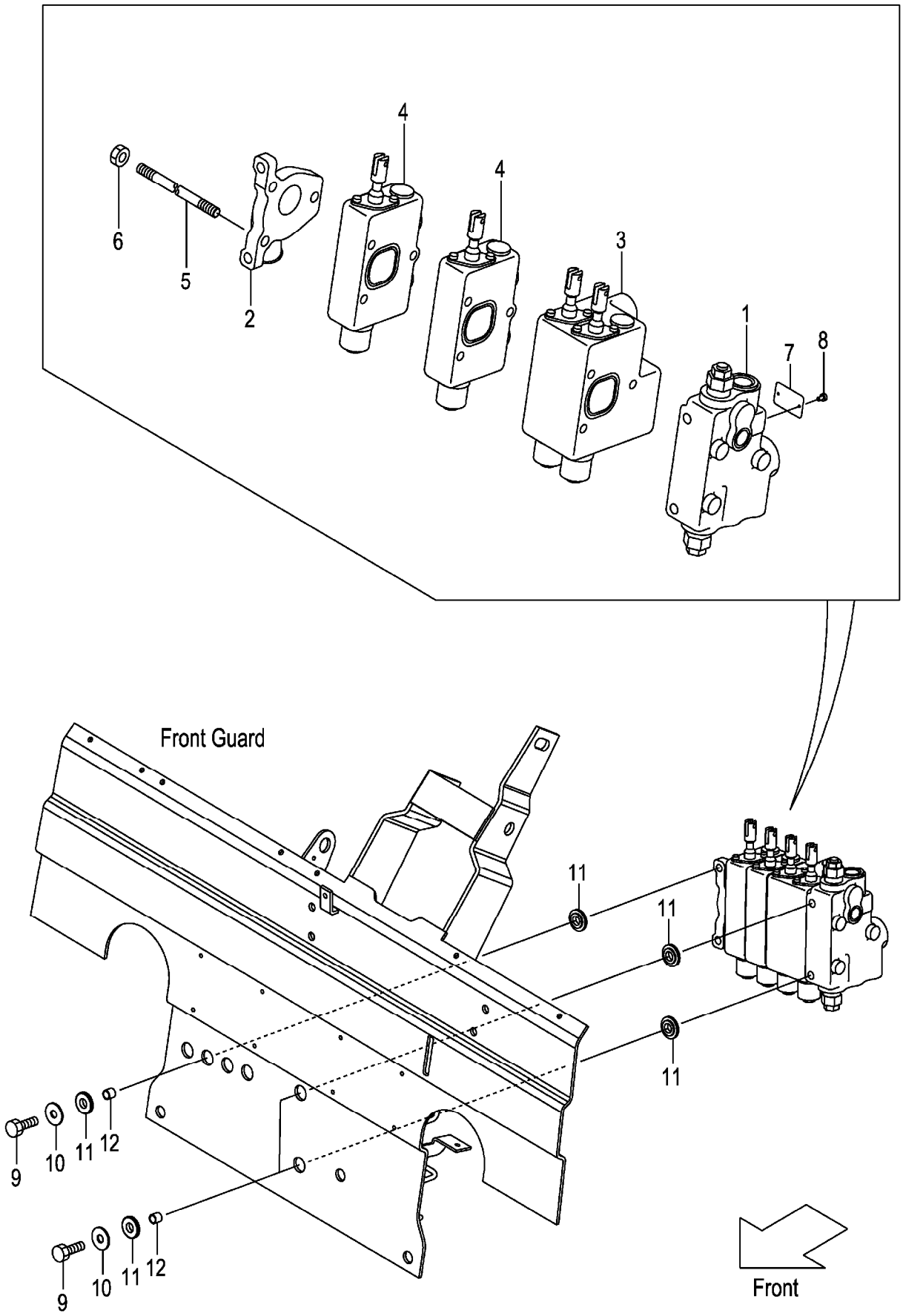

A:FG30C3 D:FD30C3
B:FG30T3 E:FD30T3
C:FG30W3 F:FD30W3

FIG.168
(F7037330)

Item No	Part No.	Mark	Description		Req'd	Remarks : Serial No.
A1	22N57-30241		VALVE-ASSY,CONTROL	ｺﾝﾄﾛｰﾙﾊﾞﾙﾌﾞｱｯｾﾝ	1	[4SV] INC.1-8
-	52N54-60241		VALVE-ASSY,CONTROL	ｺﾝﾄﾛｰﾙﾊﾞﾙﾌﾞｱｯｾﾝ	1	[4SV/VLS] INC.1-8
-	22N57-30341		VALVE-ASSY,CONTROL	ｺﾝﾄﾛｰﾙﾊﾞﾙﾌﾞｱｯｾﾝ	1	[4SV/VLL][4SV/SIL] INC.1-8
-	22N57-30341		VALVE-ASSY,CONTROL	ｺﾝﾄﾛｰﾙﾊﾞﾙﾌﾞｱｯｾﾝ	1	A,B,D,E
						[4SV/EXE][4SV/EXN] INC.1-8
1	B-402-36066		COVER,FRONT	ｶﾊﾞｰ	1	[4SV]
-	B-402-36067		COVER,FRONT	ｶﾊﾞｰ	1	[4SV/VLS][4SV/VLL][4SV/SIL]
-	B-402-36067		COVER,FRONT	ｶﾊﾞｰ	1	A,B,D,E
						[4SV/EXE][4SV/EXN]
2	B-402-36603		COVER,REAR	ｶﾊﾞｰ	1	[4SV]
-	B-402-36151		COVER,REAR	ｶﾊﾞｰ	1	[4SV/VLL][4SV/SIL]
-	B-402-36151		COVER,REAR	ｶﾊﾞｰ	1	A,B,D,E
						[4SV/EXE][4SV/EXN]
3	B-402-37129		VALVE,COMBINATION	ﾊﾞﾙﾌﾞ	1	[4SV]
-	B-402-37128		VALVE,COMBINATION	ﾊﾞﾙﾌﾞ	1	[4SV/VLL][4SV/SIL]
-	B-402-37128		VALVE,COMBINATION	ﾊﾞﾙﾌﾞ	1	A,B,D,E
						[4SV/EXE][4SV/EXN]
4	B-402-36924		VALVE,SECTION	ﾊﾞﾙﾌﾞ	2	[4SV]
5	B-402-30905-04		BOLT,STUD	ﾎﾞﾙﾄ	3	[4SV]
6	B-023-06632-41		NUT	ﾅｯﾄ	3	[4SV]
7	B-402-00704-13		PLATE,NAME	ﾌﾟﾚｰﾄ	1	[4SV]
8	B-026-50103		RIVET	ﾘﾍﾞｯﾄ	2	[4SV]
9	22N57-32041		BOLT	ﾎﾞﾙﾄ	3	[4SV]
10	216G7-32021		WASHER,PLANE	ﾜｯｼｬ	3	[4SV]
11	22N57-42201		RUBBER,VALVE	ﾗﾊﾞｰ	6	[4SV]
12	22N57-42211		COLLAR	ｶﾗｰ	3	[4SV]

FIG.169 CONTROL VALVE [5SV]

(F7037340) ｺﾝﾄﾛｰﾙﾊﾞﾙﾌﾞ

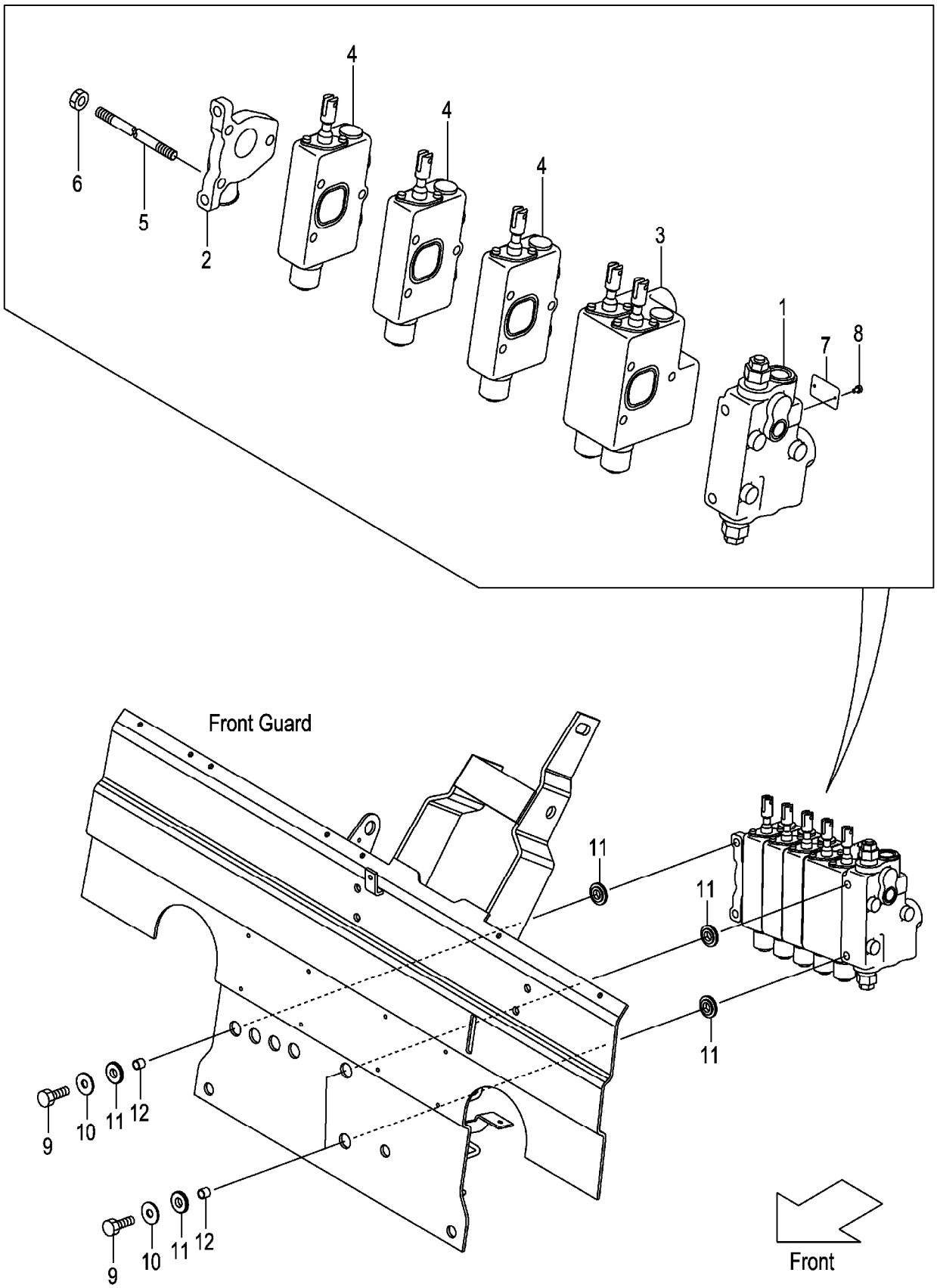

A:FG30C3 D:FD30C3
B:FG30T3 E:FD30T3
C:FG30W3 F:FD30W3

FIG.169
(F7037340)

Item No	Part No.	Mark	Description		Req'd	Remarks : Serial No.
A1	22N57-30251		VALVE-ASSY,CONTROL	ｺﾝﾄﾛｰﾙﾊﾞﾙﾌﾞｱｯｾﾝ	1	[5SV] INC.1-8
-	52N54-60251		VALVE-ASSY,CONTROL	ｺﾝﾄﾛｰﾙﾊﾞﾙﾌﾞｱｯｾﾝ	1	[5SV/VLS] INC.1-8
-	22N57-30351		VALVE-ASSY,CONTROL	ｺﾝﾄﾛｰﾙﾊﾞﾙﾌﾞｱｯｾﾝ	1	[5SV/VLL][5SV/SIL] INC.1-8
-	22N57-30351		VALVE-ASSY,CONTROL	ｺﾝﾄﾛｰﾙﾊﾞﾙﾌﾞｱｯｾﾝ	1	A,B,D,E
						[5SV/EXE][5SV/EXN] INC.1-8
1	B-402-36066		COVER,FRONT	ｶﾊﾞｰ	1	[5SV]
-	B-402-36067		COVER,FRONT	ｶﾊﾞｰ	1	[5SV/VLS][5SV/VLL][5SV/SIL]
-	B-402-36067		COVER,FRONT	ｶﾊﾞｰ	1	A,B,D,E
						[5SV/EXE][5SV/EXN]
2	B-402-36603		COVER,REAR	ｶﾊﾞｰ	1	[5SV]
-	B-402-36151		COVER,REAR	ｶﾊﾞｰ	1	[5SV/VLL][5SV/SIL]
-	B-402-36151		COVER,REAR	ｶﾊﾞｰ	1	A,B,D,E
						[5SV/EXE][5SV/EXN]
3	B-402-37129		VALVE,COMBINATION	ﾊﾞﾙﾌﾞ	1	[5SV]
-	B-402-37128		VALVE,COMBINATION	ﾊﾞﾙﾌﾞ	1	[5SV/VLL][5SV/SIL]
-	B-402-37128		VALVE,COMBINATION	ﾊﾞﾙﾌﾞ	1	A,B,D,E
						[5SV/EXE][5SV/EXN]
4	B-402-36924		VALVE,SECTION	ﾊﾞﾙﾌﾞ	3	[5SV]
5	B-402-30905-05		BOLT,STUD	ﾎﾞﾙﾄ	3	[5SV]
6	B-023-06632-41		NUT	ﾅｯﾄ	3	[5SV]
7	B-402-00704-13		PLATE,NAME	ﾌﾟﾚｰﾄ	1	[5SV]
8	B-026-50103		RIVET	ﾘﾍﾞｯﾄ	2	[5SV]
9	22N57-32041		BOLT	ﾎﾞﾙﾄ	3	[5SV]
10	216G7-32021		WASHER,PLANE	ﾜｯｼｬ	3	[5SV]
11	22N57-42201		RUBBER,VALVE	ﾗﾊﾞｰ	6	[5SV]
12	22N57-42211		COLLAR	ｶﾗｰ	3	[5SV]

FIG.170 CONTROL VALVE FITTING

(F7037350) ｺﾝﾄﾛｰﾙﾊﾞﾙﾌﾞﾌｨｯﾃｨﾝｸﾞ

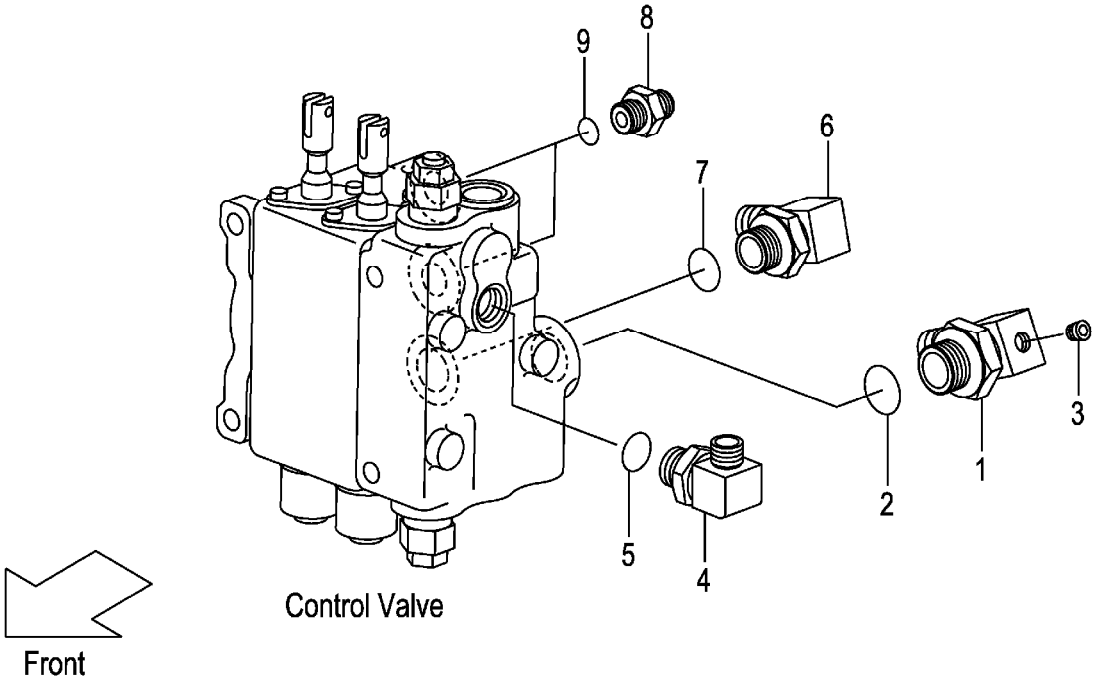

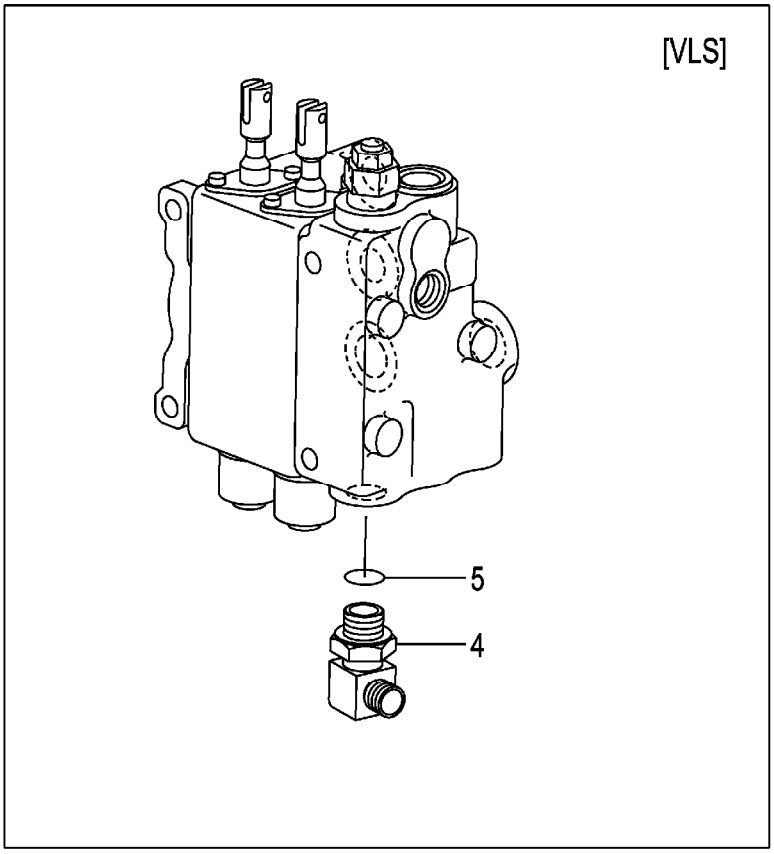

A:FG30C3 FG30T3 FG30W3
B:FD30C3 FD30T3 FD30W3

Item No	Part No.	Mark	Description		Req'd	Remarks : Serial No.
A1	22N57-63011		ELBOW-ASSY	ｴﾙﾎﾞｱｯｾﾝ	1	INC.1-3
1	NO PART NO.	#	ELBOW	ｴﾙﾎﾞ	1	
2	03320-00240		O-RING	Oﾘﾝｸﾞ	1	
3	23870-52871		PLUG,SUNK	ﾌﾟﾗｸﾞ	1	
A2	04150-20202		ELBOW-ASSY	ｴﾙﾎﾞｱｯｾﾝ	1	INC.4,5
-	04150-20202		ELBOW-ASSY	ｴﾙﾎﾞｱｯｾﾝ	2	[VLS] INC.4,5
4	NO PART NO.	#	ELBOW	ｴﾙﾎﾞ	1	
-	NO PART NO.	#	ELBOW	ｴﾙﾎﾞ	2	[VLS]
5	03320-00110		O-RING	Oﾘﾝｸﾞ	1	
-	03320-00110		O-RING	Oﾘﾝｸﾞ	2	[VLS]
A2	04150-20404		ELBOW-ASSY	ｴﾙﾎﾞｱｯｾﾝ	1	INC.6,7
6	NO PART NO.	#	ELBOW	ｴﾙﾎﾞ	1	
7	03320-00180		O-RING	Oﾘﾝｸﾞ	1	
A3	277H7-60601		NIPPLE-ASSY	ﾆｯﾌﾟﾙｱｯｾﾝ	2	INC.8,9
8	NO PART NO.	#	NIPPLE	ﾆｯﾌﾟﾙ	2	
9	03320-00140		O-RING	Oﾘﾝｸﾞ	2	

FIG.171 VALVE CONTROL [2SV]

(F70373A0) ﾊﾞﾙﾌﾞｺﾝﾄﾛｰﾙ

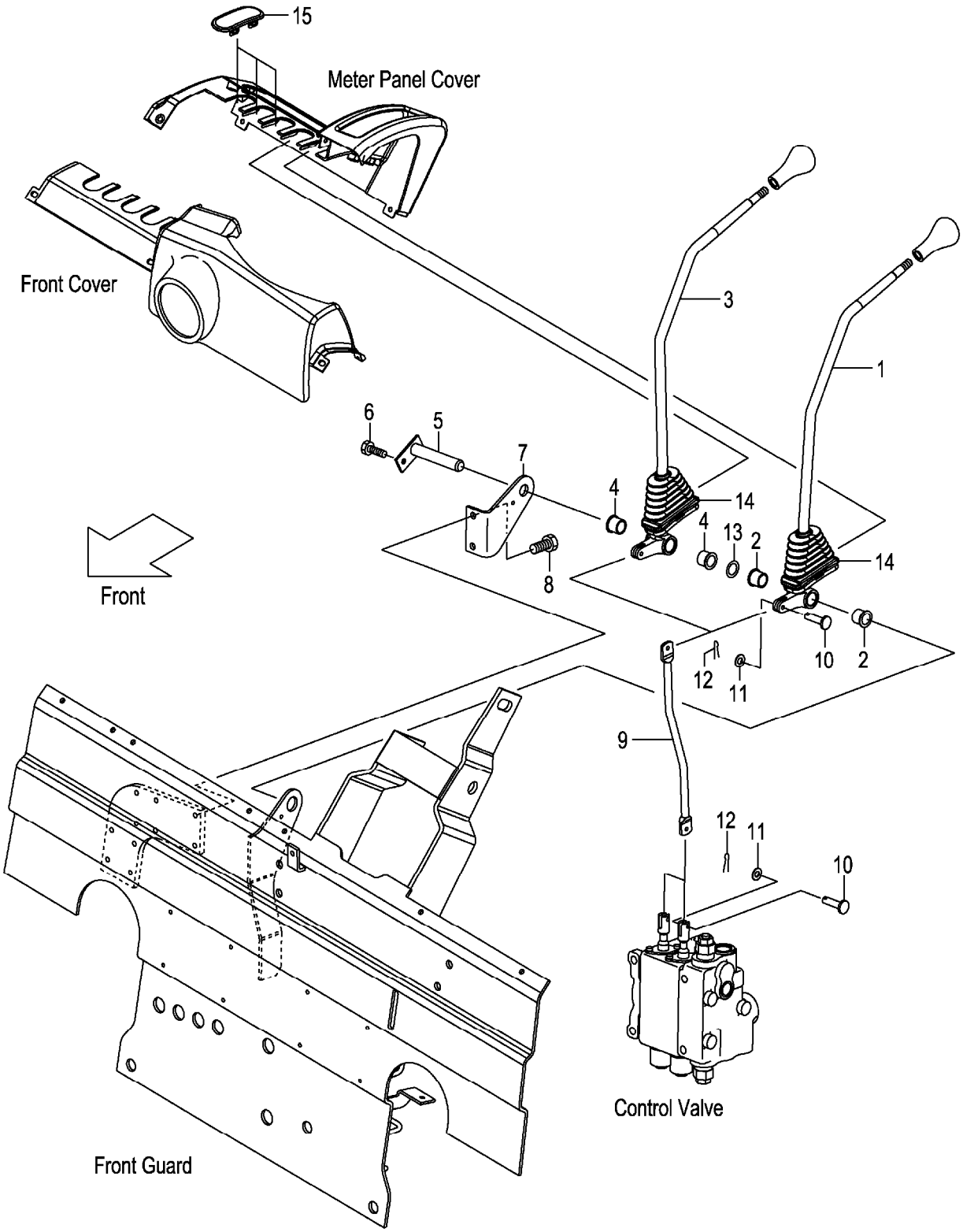

A:FG30C3 FG30T3 FG30W3
B:FD30C3 FD30T3 FD30W3

Item No	Part No.	Mark	Description		Req'd	Remarks : Serial No.
A1	22N57-40011		LEVER-ASSY,LIFT	ﾘﾌﾄﾚﾊﾞｰｱｯｾﾝ	1	INC.1,2
1	NO PART NO.	#	LEVER,LIFT	ﾚﾊﾞｰ	1	
2	214A7-42071		BUSHING	ﾌﾞｯｼﾝｸﾞ	2	
A2	22N57-40021		LEVER-ASSY,TILT	ﾃｨﾙﾄﾚﾊﾞｰｱｯｾﾝ	1	INC.3,4
3	NO PART NO.	#	LEVER,TILT	ﾚﾊﾞｰ	1	
4	214A7-42071		BUSHING	ﾌﾞｯｼﾝｸﾞ	2	
5	23647-40041		SHAFT,2SV-LEVER	ｼｬﾌﾄ	1	
-	529F3-70401		SHAFT,2SV-LEVER	ｼｬﾌﾄ	1	[FC]
6	01183-06012		BOLT	ﾎﾞﾙﾄ	1	
7	22N57-42001		BRACKET,VALVE-LEVER	ﾌﾞﾗｹｯﾄ	1	
8	01183-08012		BOLT	ﾎﾞﾙﾄ	2	
9	22N57-42101		JOINT	ｼﾞｮｲﾝﾄ	2	
10	22N57-42121		PIN,CLEVIS	ﾋﾟﾝ	4	
11	02000-00005		WASHER	ﾜｯｼｬ	4	
12	02200-16010		PIN,COTTER	ﾋﾟﾝ	4	
13	22517-40051		SHIM,T-0.2	ｼﾑ	3	
14	22N57-42151		BOOT	ﾌﾞｰﾂ	2	
15	22N57-42161		COVER,VALVE-LEVER	ｶﾊﾞｰ	3	

FIG.172 VALVE CONTROL [3SV]

(F70373B0) ﾊﾞﾙﾌﾞｺﾝﾄﾛｰﾙ

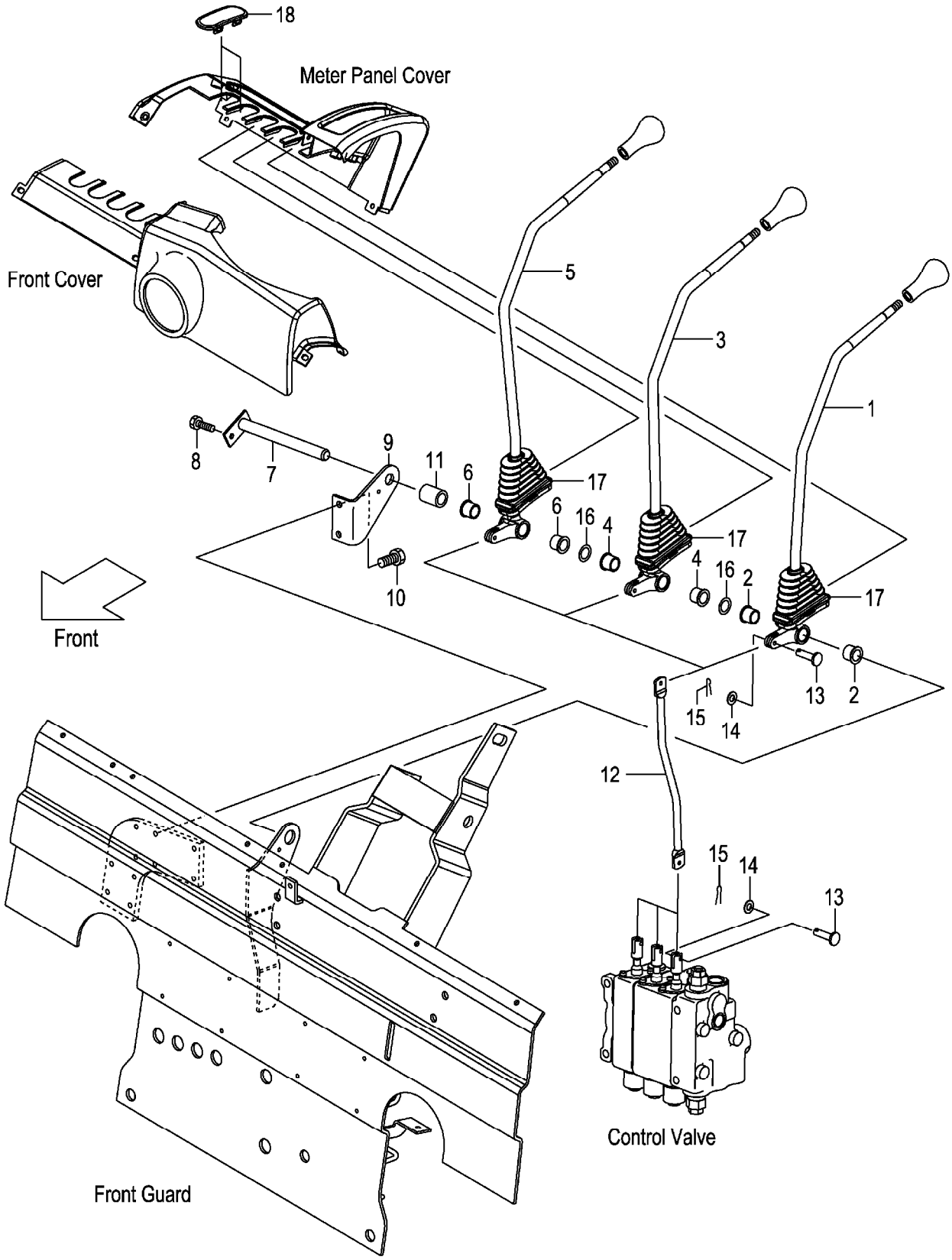

A:FG30C3 FG30T3 FG30W3
B:FD30C3 FD30T3 FD30W3

Item No	Part No.	Mark	Description		Req'd	Remarks : Serial No.
A1	22N57-40011		LEVER-ASSY,LIFT	ﾘﾌﾄﾚﾊﾞｰｱｯｾﾝ	1	[3SV] INC.1,2
1	NO PART NO.	#	LEVER,LIFT	ﾚﾊﾞｰ	1	[3SV]
2	214A7-42071		BUSHING	ﾌﾞｯｼﾝｸﾞ	2	[3SV]
A2	22N57-40021		LEVER-ASSY,TILT	ﾃｨﾙﾄﾚﾊﾞｰｱｯｾﾝ	1	[3SV] INC.3,4
3	NO PART NO.	#	LEVER,TILT	ﾚﾊﾞｰ	1	[3SV]
4	214A7-42071		BUSHING	ﾌﾞｯｼﾝｸﾞ	2	[3SV]
A3	22N57-40031		LEVER-ASSY,THIRD	ｻｰﾄﾞﾚﾊﾞｰｱｯｾﾝ	1	[3SV] INC.5,6
5	NO PART NO.	#	LEVER,THIRD	ﾚﾊﾞｰ	1	[3SV]
6	214A7-42071		BUSHING	ﾌﾞｯｼﾝｸﾞ	2	[3SV]
7	23457-42041		SHAFT,3&4SV-LEVER	ｼｬﾌﾄ	1	[3SV]
-	529F3-70411		SHAFT,3&4SV-LEVER	ｼｬﾌﾄ	1	[3SV/FC]
8	01183-06012		BOLT	ﾎﾞﾙﾄ	1	[3SV]
9	22N57-42001		BRACKET,VALVE-LEVER	ﾌﾞﾗｹｯﾄ	1	[3SV]
10	01183-08012		BOLT	ﾎﾞﾙﾄ	2	[3SV]
11	23657-42131		COLLAR	ｶﾗｰ	1	[3SV]
12	22N57-42101		JOINT	ｼﾞｮｲﾝﾄ	3	[3SV]
13	22N57-42121		PIN,CLEVIS	ﾋﾟﾝ	6	[3SV]
14	02000-00005		WASHER	ﾜｯｼｬ	6	[3SV]
15	02200-16010		PIN,COTTER	ﾋﾟﾝ	6	[3SV]
16	22517-40051		SHIM,T-0.2	ｼﾑ	6	[3SV]
17	22N57-42151		BOOT	ﾌﾞｰﾂ	3	[3SV]
18	22N57-42161		COVER,VALVE-LEVER	ｶﾊﾞｰ	2	[3SV]

FIG.173 VALVE CONTROL [4SV]

(F70373C0) ﾊﾞﾙﾌﾞｺﾝﾄﾛｰﾙ

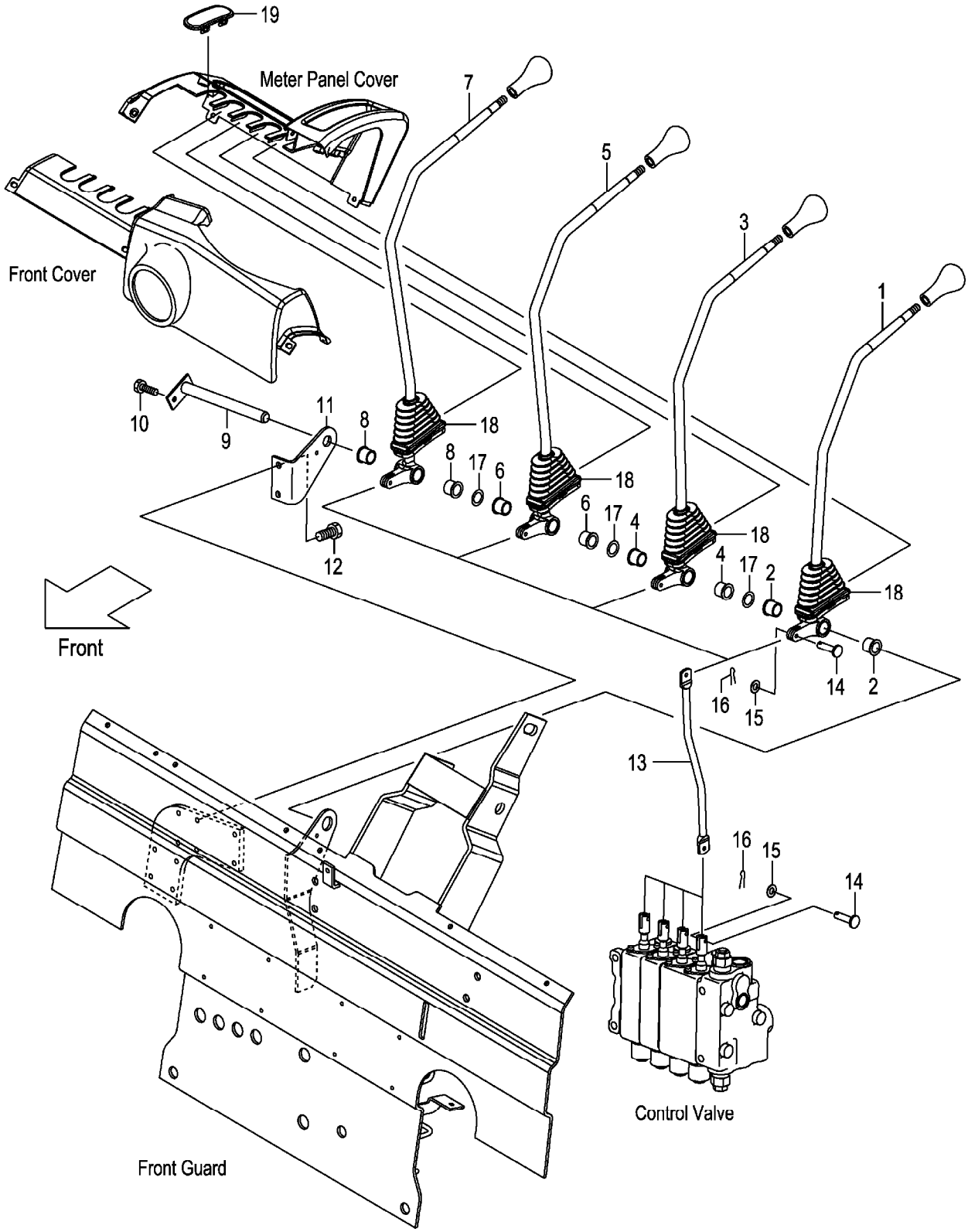

A:FG30C3 FG30T3 FG30W3
B:FD30C3 FD30T3 FD30W3

Item No	Part No.	Mark	Description		Req'd	Remarks : Serial No.
A1	22N57-40011		LEVER-ASSY,LIFT	ﾘﾌﾄﾚﾊﾞｰｱｯｾﾝ	1	[4SV] INC.1,2
1	NO PART NO.	#	LEVER,LIFT	ﾚﾊﾞｰ	1	[4SV]
2	214A7-42071		BUSHING	ﾌﾞｯｼﾝｸﾞ	2	[4SV]
A2	22N57-40021		LEVER-ASSY,TILT	ﾃｨﾙﾄﾚﾊﾞｰｱｯｾﾝ	1	[4SV] INC.3,4
3	NO PART NO.	#	LEVER,TILT	ﾚﾊﾞｰ	1	[4SV]
4	214A7-42071		BUSHING	ﾌﾞｯｼﾝｸﾞ	2	[4SV]
A3	22N57-40031		LEVER-ASSY,THIRD	ｻｰﾄﾞﾚﾊﾞｰｱｯｾﾝ	1	[4SV] INC.5,6
5	NO PART NO.	#	LEVER,THIRD	ﾚﾊﾞｰ	1	[4SV]
6	214A7-42071		BUSHING	ﾌﾞｯｼﾝｸﾞ	2	[4SV]
A4	22N57-40041		LEVER-ASSY,FOURTH	ﾌｫｰｽﾚﾊﾞｰｱｯｾﾝ	1	[4SV] INC.7,8
7	NO PART NO.	#	LEVER,FOURTH	ﾚﾊﾞｰ	1	[4SV]
8	214A7-42071		BUSHING	ﾌﾞｯｼﾝｸﾞ	2	[4SV]
9	23457-42041		SHAFT,3&4SV-LEVER	ｼｬﾌﾄ	1	[4SV]
-	529F3-70411		SHAFT,3&4SV-LEVER	ｼｬﾌﾄ	1	[4SV/FC]
10	01183-06012		BOLT	ﾎﾞﾙﾄ	1	[4SV]
11	22N57-42001		BRACKET,VALVE-LEVER	ﾌﾞﾗｹｯﾄ	1	[4SV]
12	01183-08012		BOLT	ﾎﾞﾙﾄ	2	[4SV]
13	22N57-42101		JOINT	ｼﾞｮｲﾝﾄ	4	[4SV]
14	22N57-42121		PIN,CLEVIS	ﾋﾟﾝ	8	[4SV]
15	02000-00005		WASHER	ﾜｯｼｬ	8	[4SV]
16	02200-16010		PIN,COTTER	ﾋﾟﾝ	8	[4SV]
17	22517-40051		SHIM,T-0.2	ｼﾑ	9	[4SV]
18	22N57-42151		BOOT	ﾌﾞｰﾂ	4	[4SV]
19	22N57-42161		COVER,VALVE-LEVER	ｶﾊﾞｰ	1	[4SV]

FIG.174 VALVE CONTROL [5SV]

(F70373D0) ﾊﾞﾙﾌﾞｺﾝﾄﾛｰﾙ

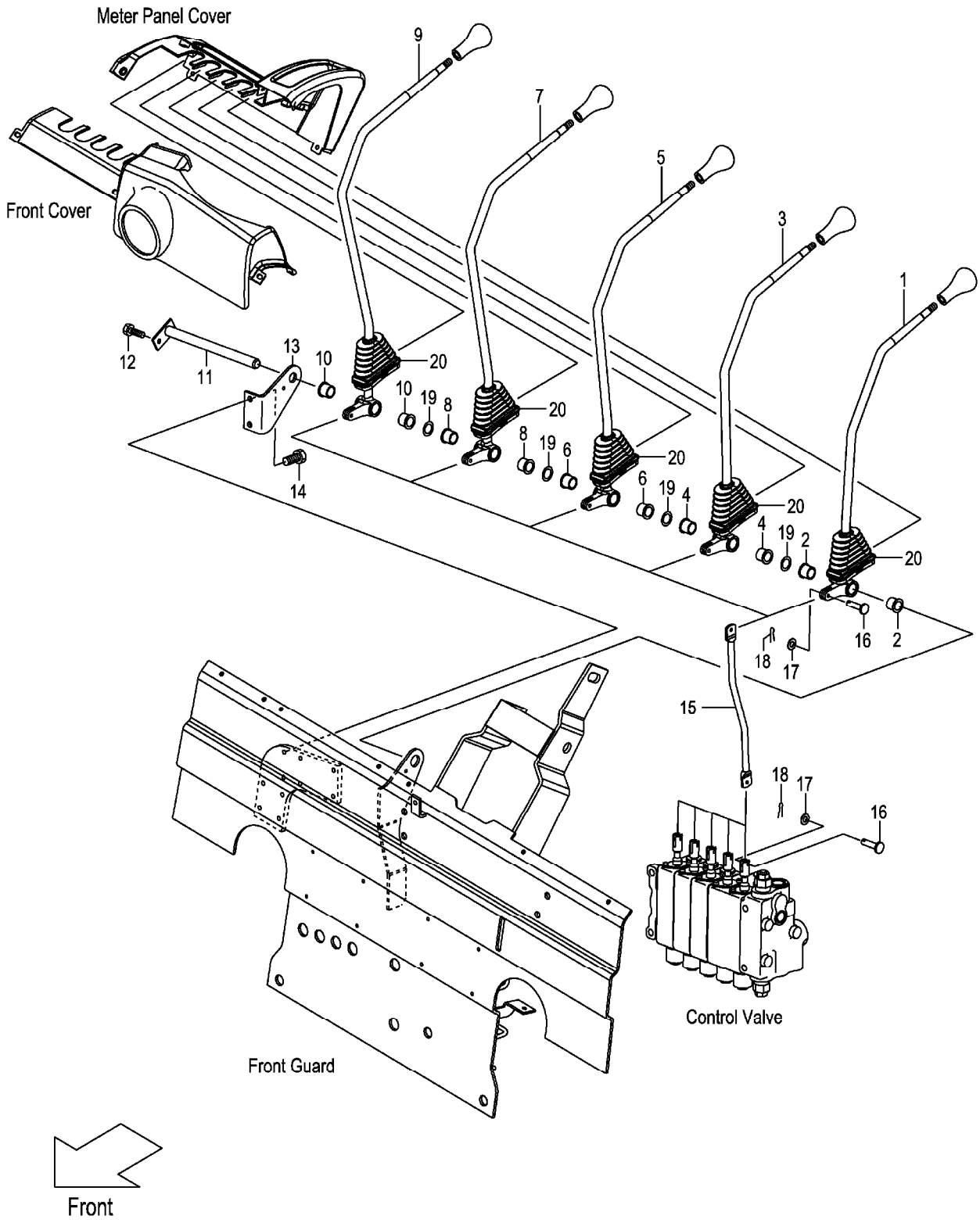

A:FG30C3 FG30T3 FG30W3
B:FD30C3 FD30T3 FD30W3

Item No	Part No.	Mark	Description		Req'd	Remarks : Serial No.
A1	22N57-40011		LEVER-ASSY,LIFT	ﾘﾌﾄﾚﾊﾞｰｱｯｾﾝ	1	[5SV] INC.1,2
1	NO PART NO.	#	LEVER,LIFT	ﾚﾊﾞｰ	1	[5SV]
2	214A7-42071		BUSHING	ﾌﾞｯｼﾝｸﾞ	2	[5SV]
A2	22N57-40021		LEVER-ASSY,TILT	ﾃｨﾙﾄﾚﾊﾞｰｱｯｾﾝ	1	[5SV] INC.3,4
3	NO PART NO.	#	LEVER,TILT	ﾚﾊﾞｰ	1	[5SV]
4	214A7-42071		BUSHING	ﾌﾞｯｼﾝｸﾞ	2	[5SV]
A3	22N57-40031		LEVER-ASSY,THIRD	ｻｰﾄﾞﾚﾊﾞｰｱｯｾﾝ	1	[5SV] INC.5,6
5	NO PART NO.	#	LEVER,THIRD	ﾚﾊﾞｰ	1	[5SV]
6	214A7-42071		BUSHING	ﾌﾞｯｼﾝｸﾞ	2	[5SV]
A4	22N57-40041		LEVER-ASSY,FOURTH	ﾌｫｰｽﾚﾊﾞｰｱｯｾﾝ	1	[5SV] INC.7,8
7	NO PART NO.	#	LEVER,FOURTH	ﾚﾊﾞｰ	1	[5SV]
8	214A7-42071		BUSHING	ﾌﾞｯｼﾝｸﾞ	2	[5SV]
A5	22N57-40051		LEVER-ASSY,FIFTH	ﾌｨﾌｽﾚﾊﾞｰｱｯｾﾝ	1	[5SV] INC.9,10
9	NO PART NO.	#	LEVER,FIFTH	ﾚﾊﾞｰ	1	[5SV]
10	214A7-42071		BUSHING	ﾌﾞｯｼﾝｸﾞ	2	[5SV]
11	55593-02371		SHAFT,5SV-LEVER	ｼｬﾌﾄ	1	[5SV]
-	529F3-70421		SHAFT,5SV-LEVER	ｼｬﾌﾄ	1	[5SV/FC]
12	01183-06012		BOLT	ﾎﾞﾙﾄ	1	[5SV]
13	22N57-42001		BRACKET,VALVE-LEVER	ﾌﾞﾗｹｯﾄ	1	[5SV]
14	01183-08012		BOLT	ﾎﾞﾙﾄ	2	[5SV]
15	22N57-42101		JOINT	ｼﾞｮｲﾝﾄ	5	[5SV]
16	22N57-42121		PIN,CLEVIS	ﾋﾟﾝ	10	[5SV]
17	02000-00005		WASHER	ﾜｯｼｬ	10	[5SV]
18	02200-16010		PIN,COTTER	ﾋﾟﾝ	10	[5SV]
19	22517-40051		SHIM,T-0.2	ｼﾑ	12	[5SV]
20	22N57-42151		BOOT	ﾌﾞｰﾂ	5	[5SV]

FIG.175 VALVE CONTROL KNOB

(F70373E0) ﾊﾞﾙﾌﾞｺﾝﾄﾛｰﾙﾉﾌﾞ

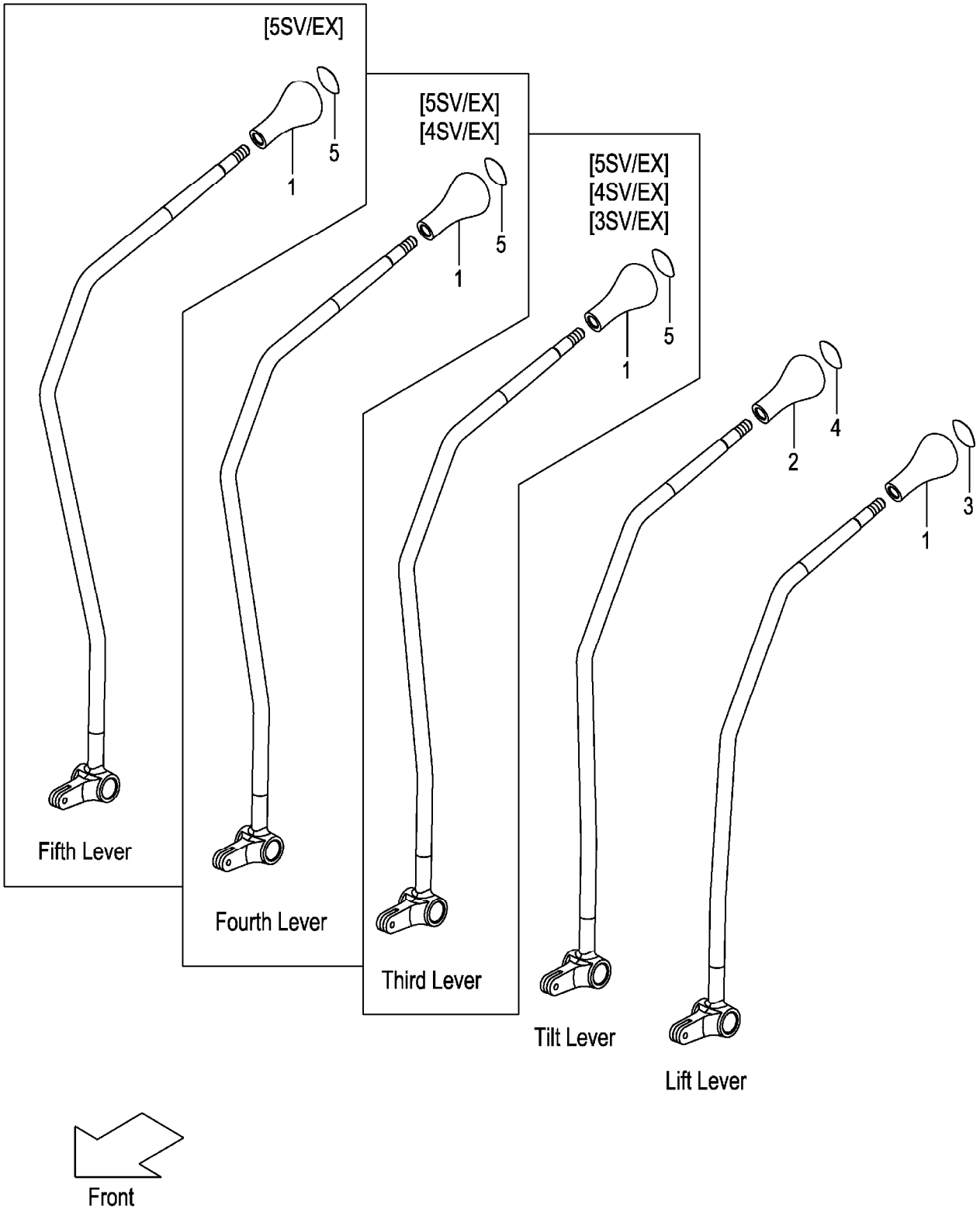

A:FG30C3 FG30T3 C:FD30C3 FD30T3
B:FG30W3 D:FD30W3

Item No	Part No.	Mark	Description	Req'd	Remarks : Serial No.
1	214A7-42181		KNOB,VALVE-LEVER ﾉﾌﾞ	1	
-	214A7-42181		KNOB,VALVE-LEVER ﾉﾌﾞ	2	A,C [3SV/EX]
-	214A7-42181		KNOB,VALVE-LEVER ﾉﾌﾞ	3	A,C [4SV/EX]
-	214A7-42181		KNOB,VALVE-LEVER ﾉﾌﾞ	4	A,C [5SV/EX]
2	281E7-42101		KNOB,VALVE-LEVER ﾉﾌﾞ	1	
3	214A7-42191		DECAL,SYMBOL,LIFT ﾃﾞｶﾙ	1	
4	214A7-42201		DECAL,SYMBOL,TILT ﾃﾞｶﾙ	1	
5	514A2-72411		DECAL,SYMBOL,SPACE ﾃﾞｶﾙ	1	A,C [3SV/EX]
-	514A2-72411		DECAL,SYMBOL,SPACE ﾃﾞｶﾙ	2	A,C [4SV/EX]
-	514A2-72411		DECAL,SYMBOL,SPACE ﾃﾞｶﾙ	3	A,C [5SV/EX]

HYDRAULIC LINE (MAIN)(1/4)
FIG.176 (GASOLINE:CLUTCH & TOR-CON)

(F7037610) ﾊｲﾄﾞﾛﾘｯｸﾗｲﾝ(ﾒｲﾝ)(1/4)

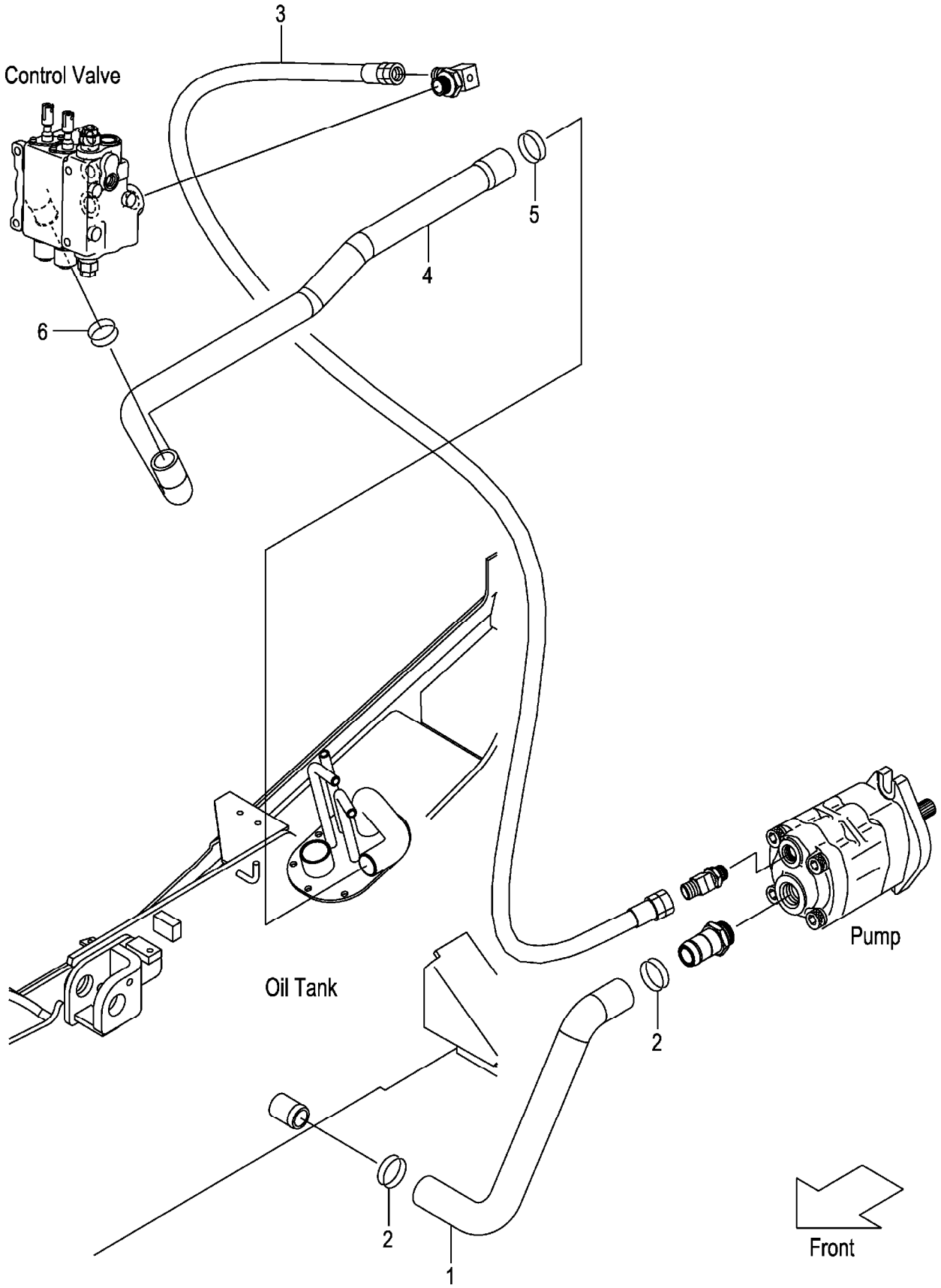

A:FG30C3 FG30T3

Item No	Part No.	Mark	Description		Req'd	Remarks : Serial No.
1	22B57-62001		HOSE,SUCTION	ﾎｰｽ	1	
2	04911-00046		CLIP	ｸﾘｯﾌﾟ	2	
3	22N57-63001		HOSE	ﾎｰｽ	1	1-110
-	04691-04123		HOSE	ﾎｰｽ	1	111-
4	22N57-62101		HOSE,RETURN	ﾎｰｽ	1	
-	22N57-62201		HOSE,RETURN	ﾎｰｽ	1	[4SV][5SV]
5	04911-00044		CLIP	ｸﾘｯﾌﾟ	1	1-110
-	04911-00042		CLIP	ｸﾘｯﾌﾟ	1	111-
6	04911-00040		CLIP	ｸﾘｯﾌﾟ	1	

FIG.177 HYDRAULIC LINE (MAIN)(1/4)(GASOLINE:OIL CLUTCH)

(F7037620) ﾊｲﾄﾞﾛﾘｯｸﾗｲﾝ(ﾒｲﾝ)(1/4)

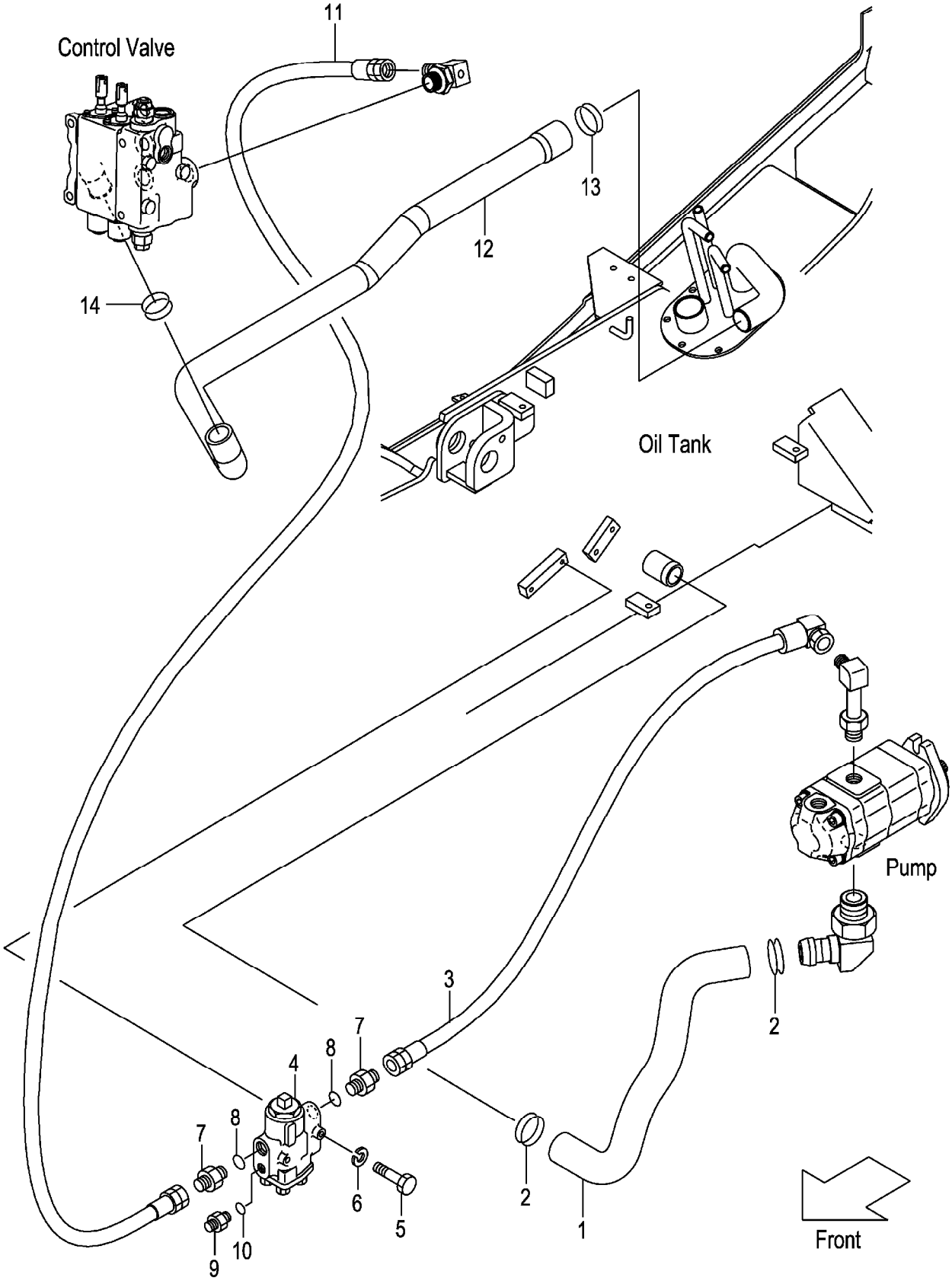

A:FG30W3

Item No	Part No.	Mark	Description		Req'd	Remarks : Serial No.
1	22C47-62001		HOSE,SUCTION	ﾎｰｽ	1	
2	04911-00046		CLIP	ｸﾘｯﾌﾟ	2	
3	22C47-62101		HOSE	ﾎｰｽ	1	
4	234H7-60301		VALVE,FLOW-PRIORITY	ﾊﾞﾙﾌﾞ	1	
5	01100-06055		BOLT	ﾎﾞﾙﾄ	2	
6	02010-00006		WASHER	ﾜｯｼｬ	2	
A1	04134-20404		NIPPLE-ASSY	ﾆｯﾌﾟﾙｱｯｾﾝ	2	INC.7,8
7	NO PART NO.	#	NIPPLE	ﾆｯﾌﾟﾙ	2	
8	03320-00180		O-RING	Oﾘﾝｸﾞ	2	
A2	23657-60311		NIPPLE-ASSY	ﾆｯﾌﾟﾙｱｯｾﾝ	1	INC.9,10
9	NO PART NO.	#	NIPPLE	ﾆｯﾌﾟﾙ	1	
10	03320-00140		O-RING	Oﾘﾝｸﾞ	1	
11	04691-04070		HOSE	ﾎｰｽ	1	
12	22N57-62101		HOSE,RETURN	ﾎｰｽ	1	
-	22N57-62201		HOSE,RETURN	ﾎｰｽ	1	[4SV][5SV]
13	04911-00044		CLIP	ｸﾘｯﾌﾟ	1	1-110
-	04911-00042		CLIP	ｸﾘｯﾌﾟ	1	111-
14	04911-00040		CLIP	ｸﾘｯﾌﾟ	1	

HYDRAULIC LINE (MAIN)(1/4)
FIG.178 (DIESEL:CLUTCH & TOR-CON)

(F7037630) ﾊｲﾄﾞﾛﾘｯｸﾗｲﾝ(ﾒｲﾝ)(1/4)

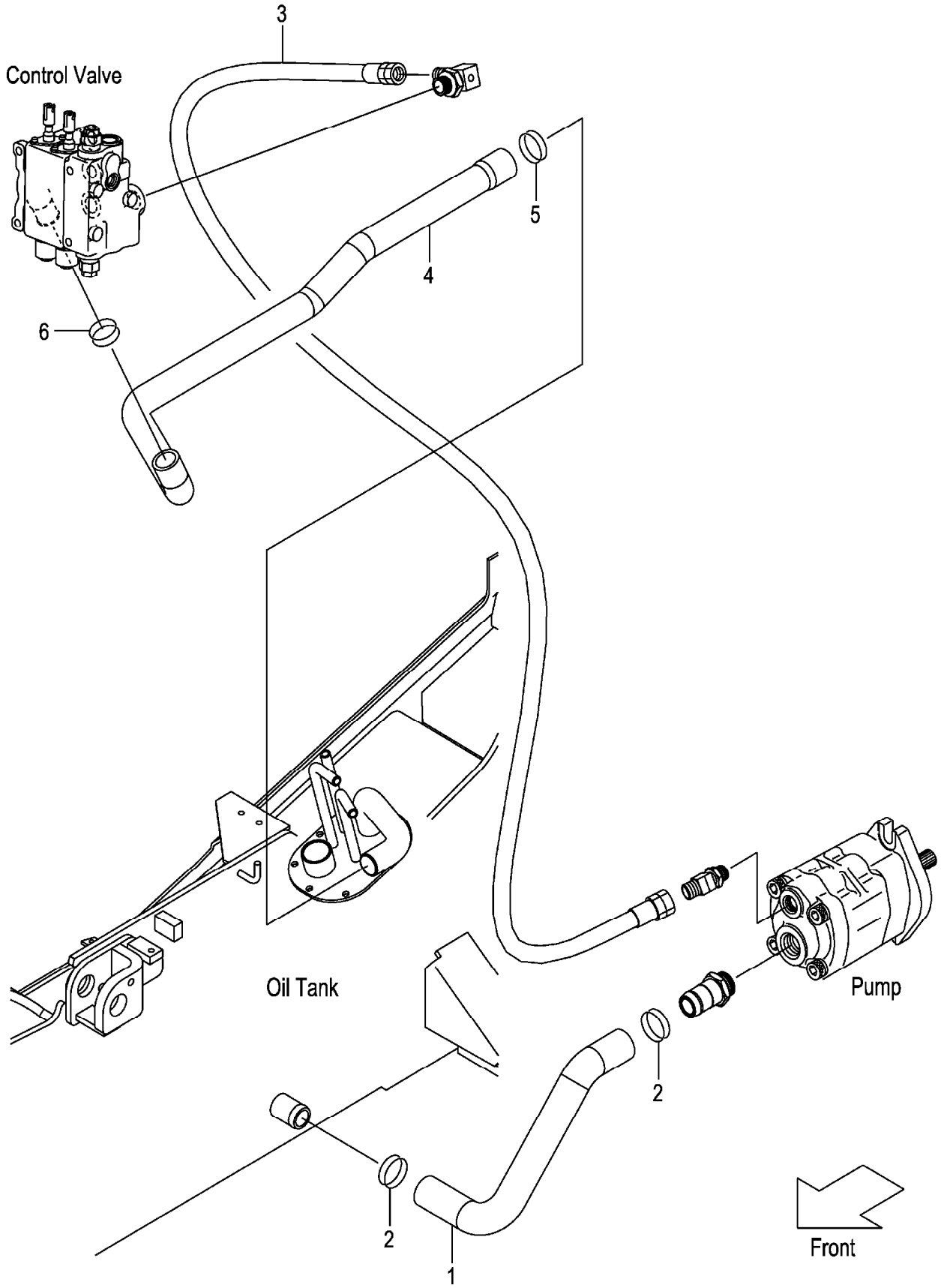

A:FD30C3 FD30T3

Item No	Part No.	Mark	Description		Req'd	Remarks : Serial No.
1	22N57-62001		HOSE,SUCTION	ﾎｰｽ	1	
2	04911-00046		CLIP	ｸﾘｯﾌﾟ	2	
3	22N57-63001		HOSE	ﾎｰｽ	1	1-126
-	04691-04123		HOSE	ﾎｰｽ	1	127-
4	22N57-62101		HOSE,RETURN	ﾎｰｽ	1	
-	22N57-62201		HOSE,RETURN	ﾎｰｽ	1	[4SV][5SV]
5	04911-00044		CLIP	ｸﾘｯﾌﾟ	1	1-126
-	04911-00042		CLIP	ｸﾘｯﾌﾟ	1	127-
6	04911-00040		CLIP	ｸﾘｯﾌﾟ	1	

FIG.179 HYDRAULIC LINE (MAIN)(1/4)(DIESEL:OIL CLUTCH)

(F7037640) ﾊｲﾄﾞﾛﾘｯｸﾗｲﾝ(ﾒｲﾝ)(1/4)

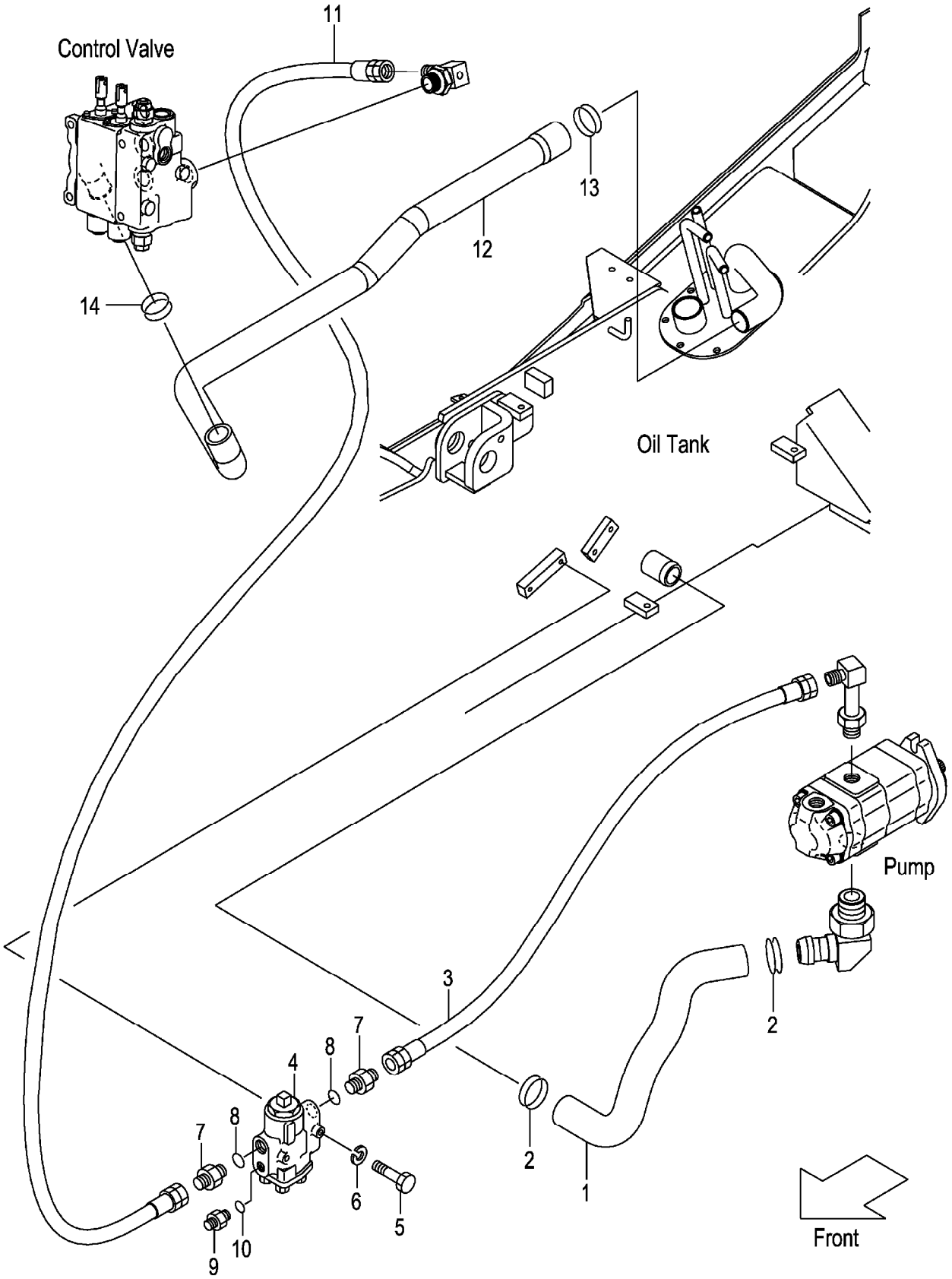

A:FD30W3

Item No	Part No.	Mark	Description		Req'd	Remarks : Serial No.
1	22P47-62001		HOSE,SUCTION	ﾎｰｽ	1	
2	04911-00046		CLIP	ｸﾘｯﾌﾟ	2	
3	04691-04050		HOSE	ﾎｰｽ	1	
4	234H7-60301		VALVE,FLOW-PRIORITY	ﾊﾞﾙﾌﾞ	1	
5	01100-06055		BOLT	ﾎﾞﾙﾄ	2	
6	02010-00006		WASHER	ﾜｯｼｬ	2	
A1	04134-20404		NIPPLE-ASSY	ﾆｯﾌﾟﾙｱｯｾﾝ	2	INC.7,8
7	NO PART NO.	#	NIPPLE	ﾆｯﾌﾟﾙ	2	
8	03320-00180		O-RING	Oﾘﾝｸﾞ	2	
A2	23657-60311		NIPPLE-ASSY	ﾆｯﾌﾟﾙｱｯｾﾝ	1	INC.9,10
9	NO PART NO.	#	NIPPLE	ﾆｯﾌﾟﾙ	1	
10	03320-00140		O-RING	Oﾘﾝｸﾞ	1	
11	04691-04070		HOSE	ﾎｰｽ	1	
12	22N57-62101		HOSE,RETURN	ﾎｰｽ	1	
-	22N57-62201		HOSE,RETURN	ﾎｰｽ	1	[4SV][5SV]
13	04911-00044		CLIP	ｸﾘｯﾌﾟ	1	1-126
-	04911-00042		CLIP	ｸﾘｯﾌﾟ	1	127-
14	04911-00040		CLIP	ｸﾘｯﾌﾟ	1	

FIG.180 HYDRAULIC LINE (MAIN)(2/4)

(F7037650) ﾊｲﾄﾞﾛﾘｯｸﾗｲﾝ(ﾒｲﾝ)(2/4)

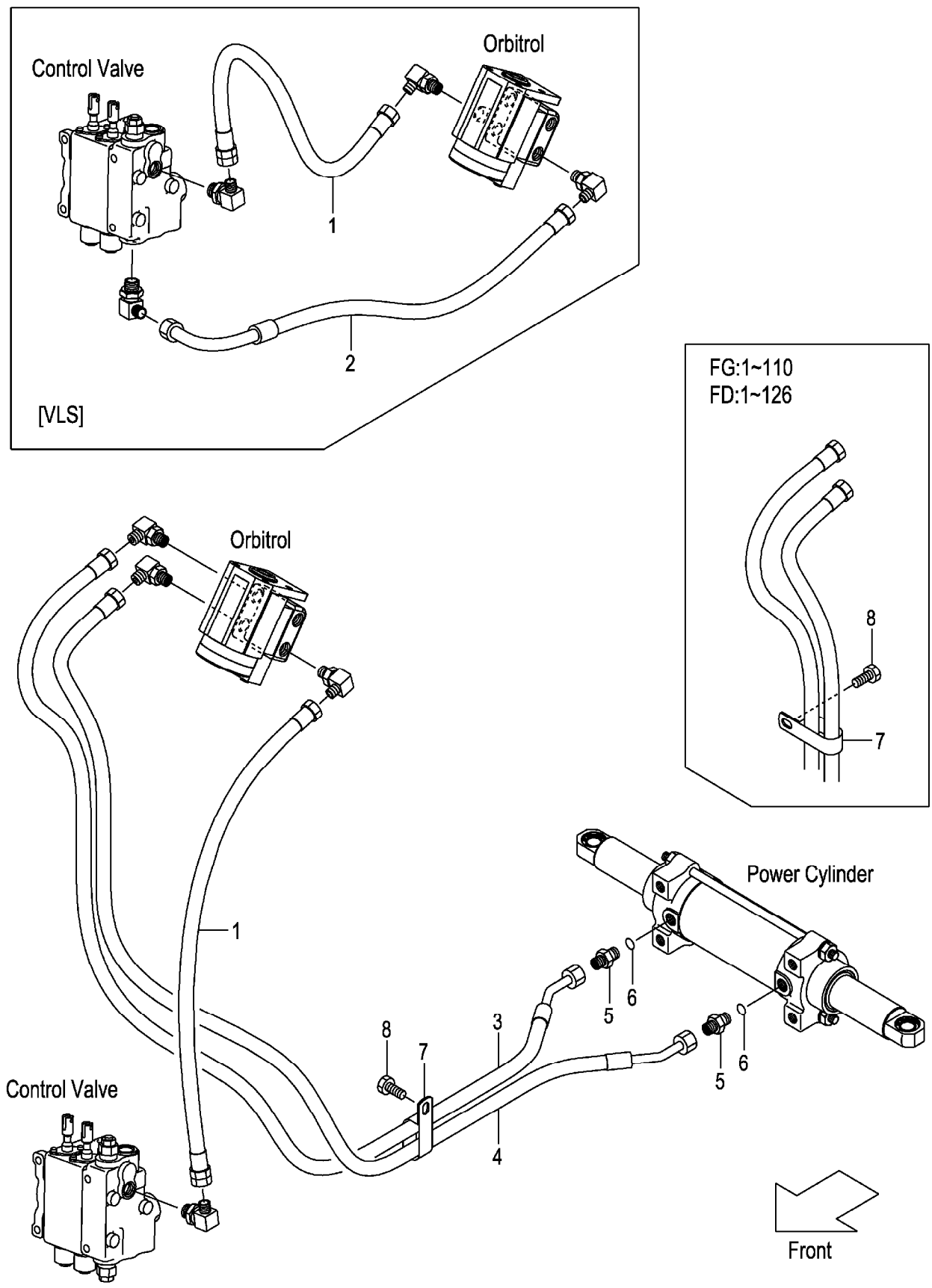

A:FG30C3 FG30T3 FG30W3
B:FD30C3 FD30T3 FD30W3

Item No	Part No.	Mark	Description		Req'd	Remarks : Serial No.
1	04691-02035		HOSE	ﾎｰｽ	1	A:1-110 B:1-126
-	04691-02038		HOSE	ﾎｰｽ	1	A:111- B:127-
-	04691-02035		HOSE	ﾎｰｽ	1	[VLS]
2	22N57-62801		HOSE	ﾎｰｽ	1	[VLS]
3	22N97-62381		HOSE,PS,FRONT	ﾎｰｽ	1	
4	22N97-62391		HOSE,PS,FRONT	ﾎｰｽ	1	
A1	04134-20303		NIPPLE-ASSY	ﾆｯﾌﾟﾙｱｯｾﾝ	2	INC.5,6
5	NO PART NO.	#	NIPPLE	ﾆｯﾌﾟﾙ	2	
6	03320-00140		O-RING	Oﾘﾝｸﾞ	2	
7	26602-42221		CLIP	ｸﾘｯﾌﾟ	2	A:1-110 B:1-126
-	26602-42221		CLIP	ｸﾘｯﾌﾟ	1	A:111- B:127-
8	01185-08016		BOLT	ﾎﾞﾙﾄ	2	A:1-110 B:1-126
-	01185-08016		BOLT	ﾎﾞﾙﾄ	1	A:111- B:127-

FIG.181 HYDRAULIC LINE (MAIN)(3/4)(CLUTCH)(TOR-CON)

(F7037660) ﾊｲﾄﾞﾛﾘｯｸﾗｲﾝ(ﾒｲﾝ)(3/4)

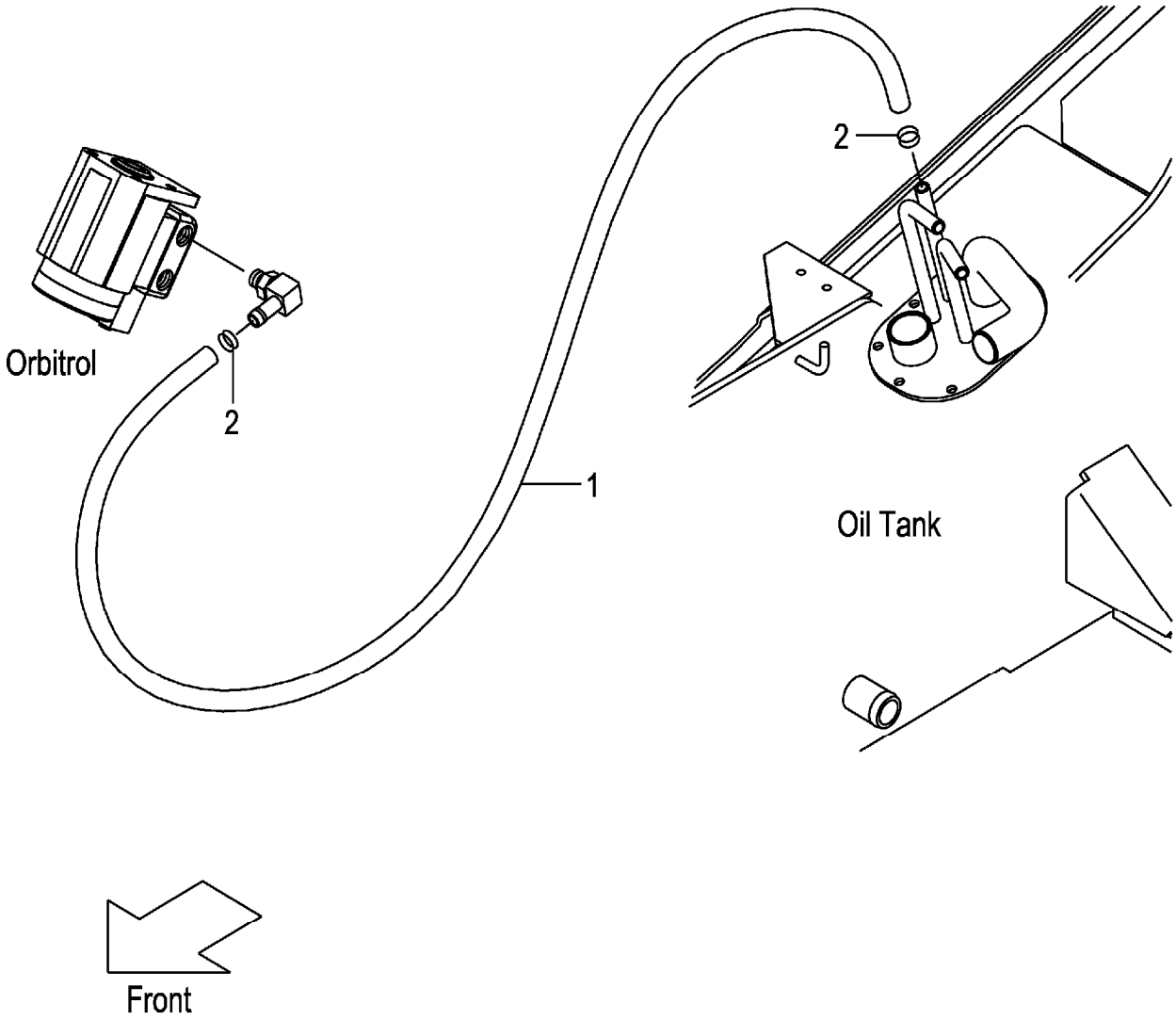

A:FG30C3 FG30T3
B:FD30C3 FD30T3

Item No	Part No.	Mark	Description	Req'd	Remarks : Serial No.
1	04710-04190		HOSE ﾎｰｽ	1	
2	04911-00020		CLIP ｸﾘｯﾌﾟ	2	

FIG.182 HYDRAULIC LINE (MAIN)(3/4)(OIL CLUTCH)

(F7037680) ﾊｲﾄﾞﾛﾘｯｸﾗｲﾝ(ﾒｲﾝ)(3/4)

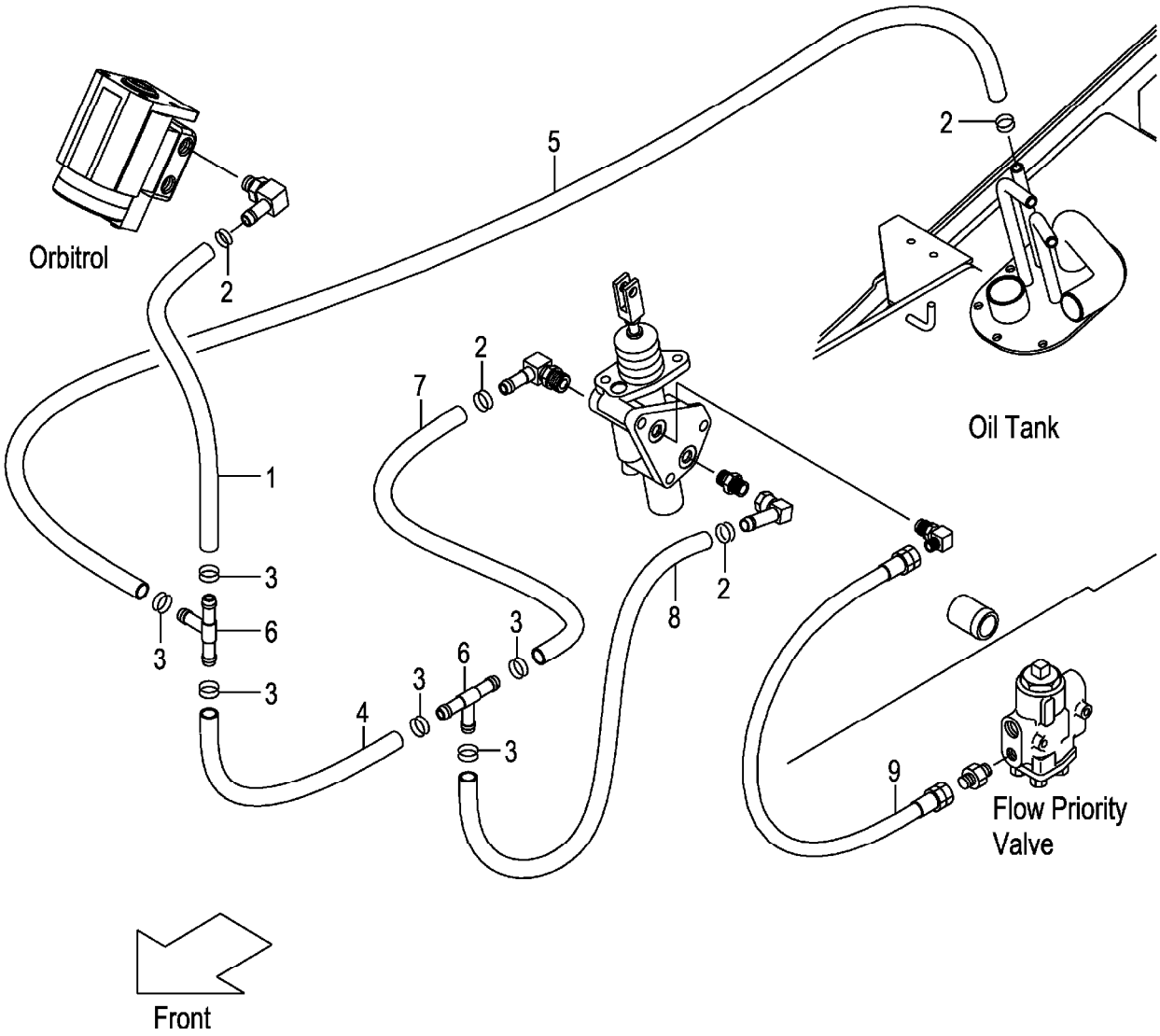

A:FG30W3
B:FD30W3

Item No	Part No.	Mark	Description		Req'd	Remarks : Serial No.
1	04710-04045		HOSE	ﾎｰｽ	1	
2	04911-00021		CLIP	ｸﾘｯﾌﾟ	4	
3	229G7-82051		CLIP	ｸﾘｯﾌﾟ	6	
4	04710-04060		HOSE	ﾎｰｽ	1	
5	04710-04145		HOSE	ﾎｰｽ	1	
6	53675-55051		THREE-WAY	ｽﾘｰｳｴｲ	2	
7	04710-04018		HOSE	ﾎｰｽ	1	
8	04710-04015		HOSE	ﾎｰｽ	1	
9	04691-02100		HOSE	ﾎｰｽ	1	

FIG.183 HYDRAULIC LINE (MAIN)(4/4)

(F7037690) ﾊｲﾄﾞﾛﾘｯｸﾗｲﾝ(ﾒｲﾝ)(4/4)

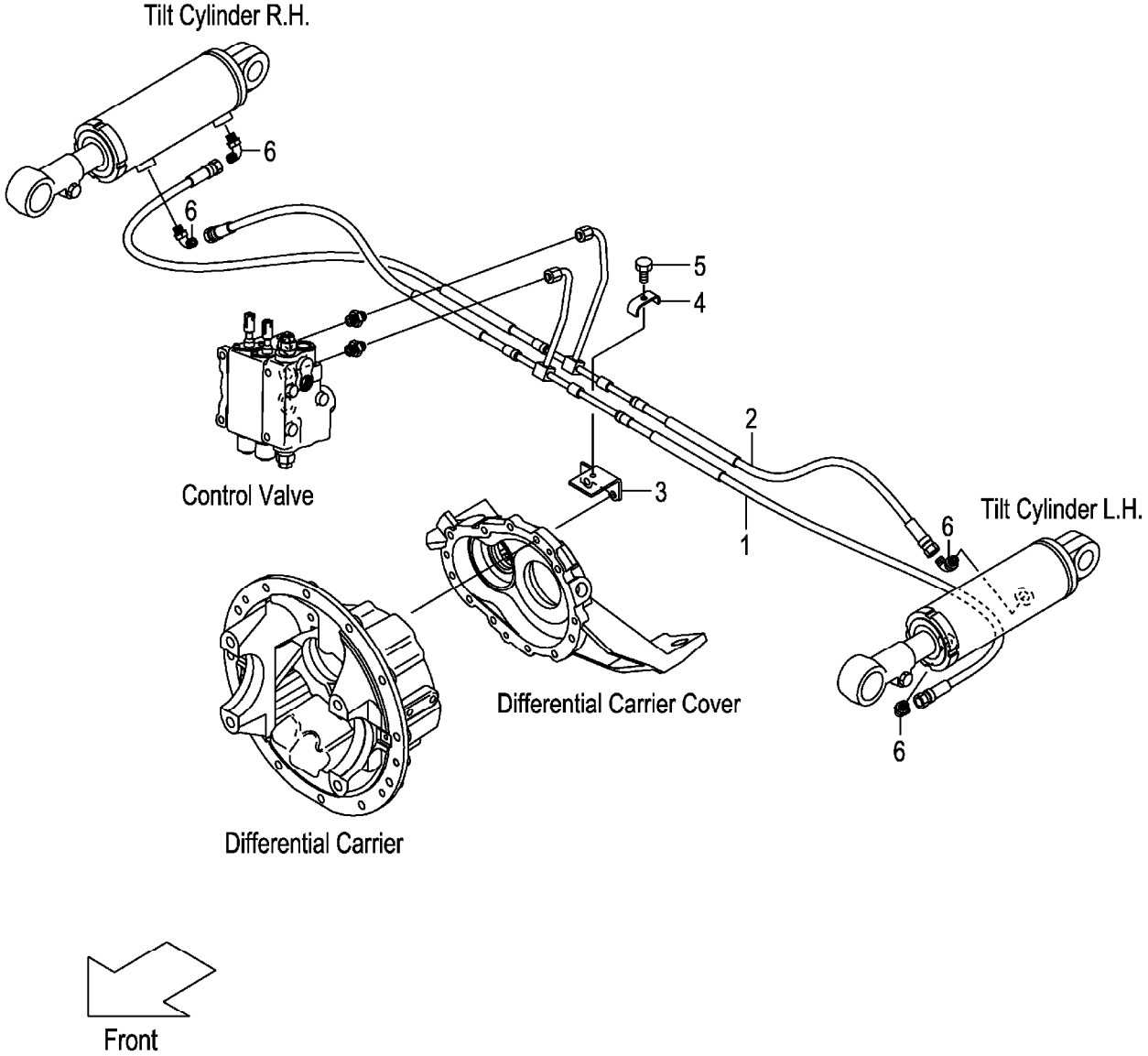

A:FG30C3 FG30T3 FG30W3
B:FD30C3 FD30T3 FD30W3

Item No	Part No.	Mark	Description		Req'd	Remarks : Serial No.
1	22N57-62401		HOSE,TILT,FRONT	ﾎｰｽ	1	
2	22N57-62451		HOSE,TILT,REAR	ﾎｰｽ	1	
3	22N57-62531		BRACKET,TILT-PIPE	ﾌﾞﾗｹｯﾄ	1	
4	281E7-62041		CLIP,HOSE	ｸﾘｯﾌﾟ	1	
5	01183-08025		BOLT	ﾎﾞﾙﾄ	1	
6	22N57-62221		ELBOW	ｴﾙﾎﾞ	4	

FIG.184 HYDRAULIC LINE (TOR-CON)

(F70376A0) ﾊｲﾄﾞﾛﾘｯｸﾗｲﾝ(ﾄﾙｺﾝ)

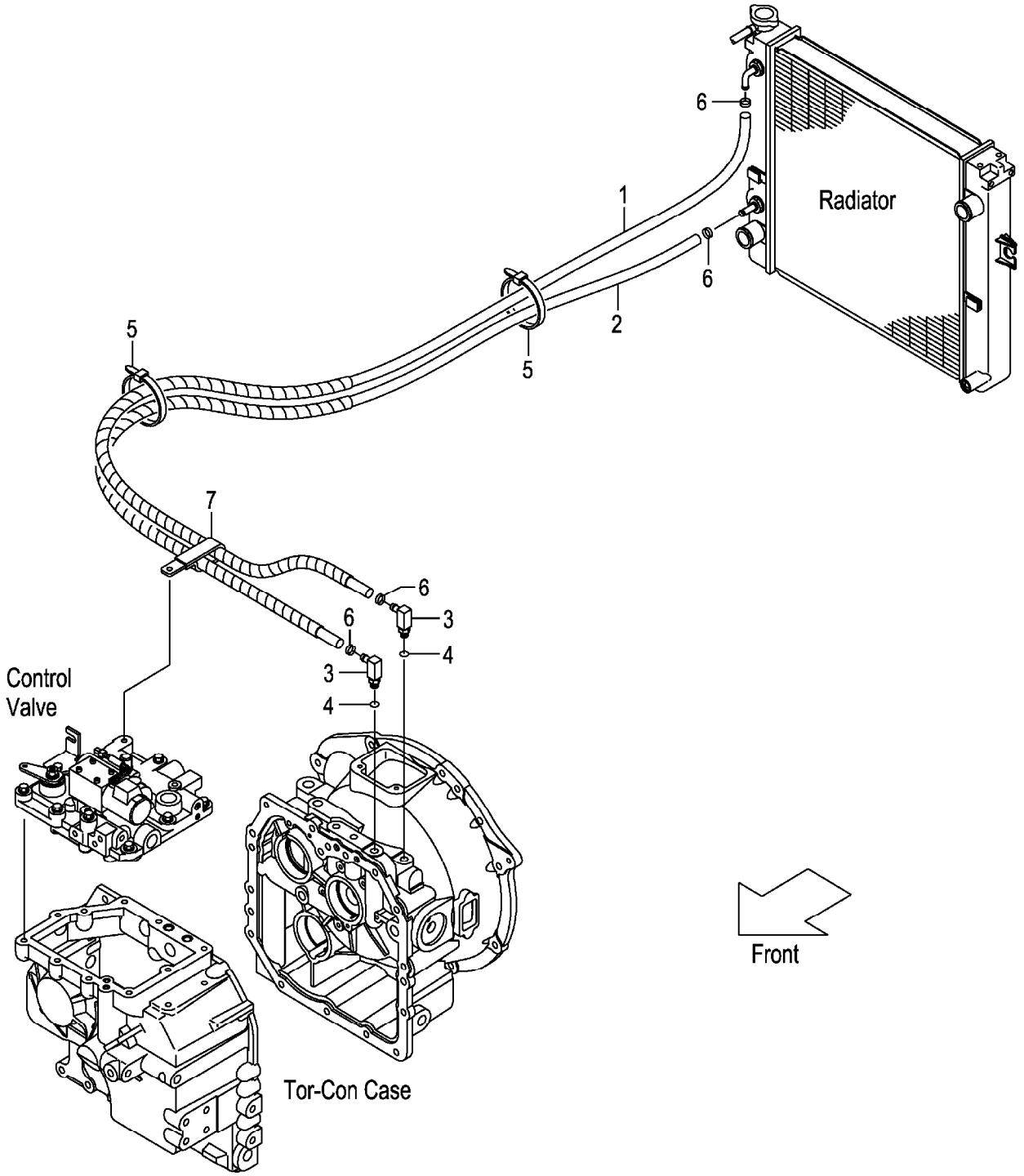

A:FG30T3
B:FD30T3

Item No	Part No.	Mark	Description		Req'd	Remarks : Serial No.
1	22N57-82001		HOSE,OIL-COOLER	ﾎｰｽ	1	A:1-110 B:1-126
-	22N57-82111		HOSE,OIL-COOLER	ﾎｰｽ	1	A:111- B:127-
2	216H7-82111		HOSE,OIL-COOLER	ﾎｰｽ	1	A:1-110 B:1-126
-	22N57-82101		HOSE,OIL-COOLER	ﾎｰｽ	1	A:111- B:127-
A1	22N57-80201		FITTING-ASSY,HOSE	ﾎｰｽﾌｨｯﾃｨﾝｸﾞｱｯｾﾝ	2	INC.3,4
3	NO PART NO.	#	FITTING,HOSE	ﾌｨｯﾃｨﾝｸﾞ	2	
4	03320-00140		O-RING	Oﾘﾝｸﾞ	2	
5	27042-42322		BAND	ﾊﾞﾝﾄﾞ	2	
6	04911-00023		CLIP	ｸﾘｯﾌﾟ	4	
7	209P7-62531		CLIP,HOSE	ｸﾘｯﾌﾟ	4	A:111- B:127-

FIG.185 HYDRAULIC LINE (OIL CLUTCH)

(F70376B0) ﾊｲﾄﾞﾛﾘｯｸﾗｲﾝ(ｵｲﾙｸﾗｯﾁ)

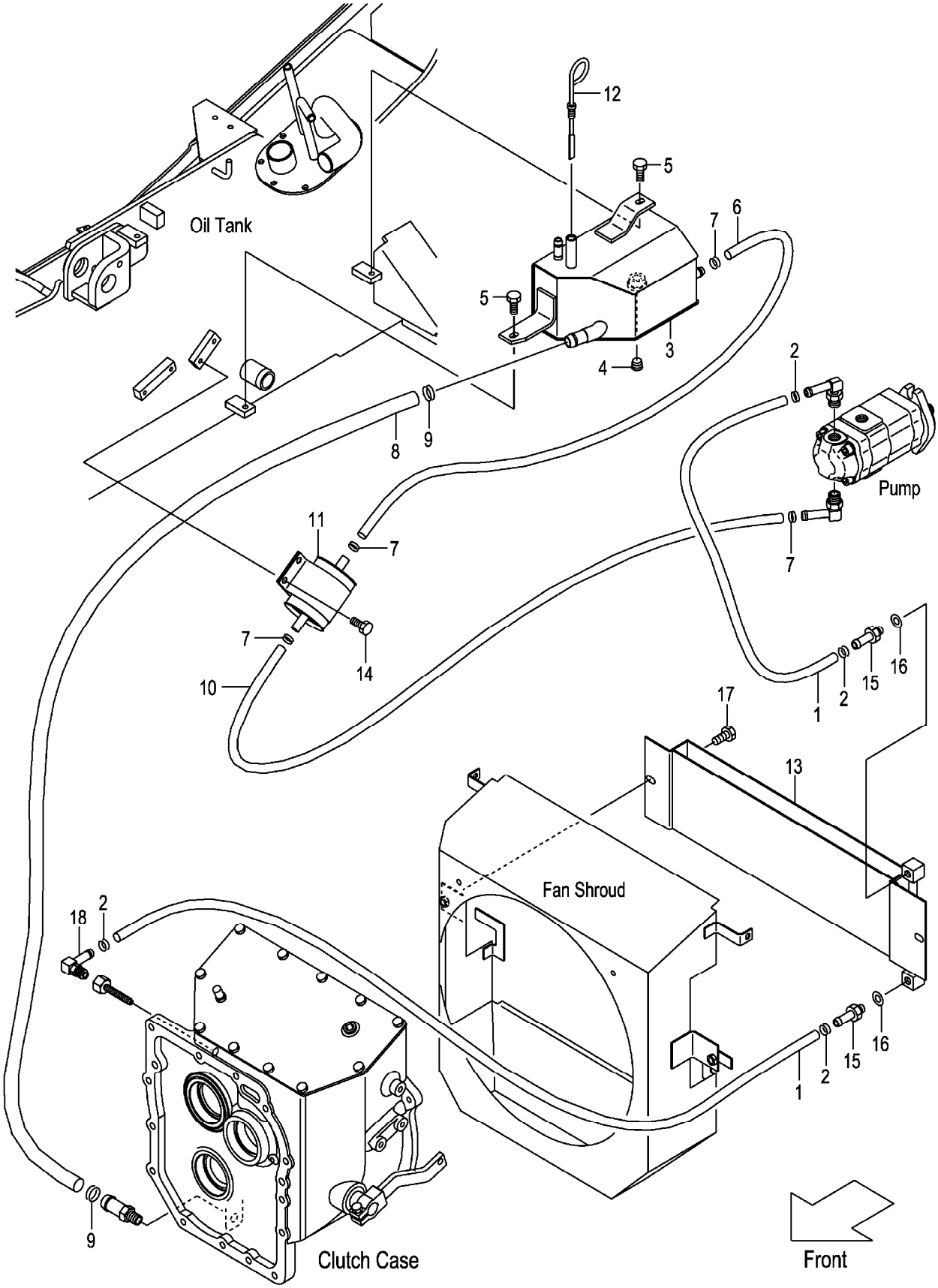

A:FG30W3
B:FD30W3

Item No	Part No.	Mark	Description		Req'd	Remarks : Serial No.
1	229G7-82001		HOSE	ﾎｰｽ	2	
2	229G7-82051		CLIP,HOSE	ｸﾘｯﾌﾟ	4	
3	22P47-60101		TANK,OIL	ﾀﾝｸ	1	
4	04000-00300		PLUG	ﾌﾟﾗｸﾞ	1	
5	01183-08020		BOLT	ﾎﾞﾙﾄ	2	
6	04710-04080		HOSE	ﾎｰｽ	1	
7	04911-00021		CLIP	ｸﾘｯﾌﾟ	4	
8	04710-06035		HOSE	ﾎｰｽ	1	
9	04911-00032		CLIP	ｸﾘｯﾌﾟ	2	
10	04710-04090		HOSE	ﾎｰｽ	1	
11	234H7-62171		FILTER	ﾌｨﾙﾀ	1	
12	27717-52081		GAUGE,OIL-LEVEL	ｹﾞｰｼﾞ	1	
13	217W2-10001		COOLER,OIL	ｸｰﾗ	1	
14	01185-08016		BOLT	ﾎﾞﾙﾄ	2	
15	229G7-82101		NIPPLE	ﾆｯﾌﾟﾙ	2	
16	23467-82041		PACKING	ﾊﾟｯｷﾝｸﾞ	2	
17	01186-10016		BOLT	ﾎﾞﾙﾄ	2	
18	22P47-60111		ELBOW	ｴﾙﾎﾞ	1	

FIG.186 TILT CYLINDER

(F7038510) ﾃｨﾙﾄｼﾘﾝﾀﾞ

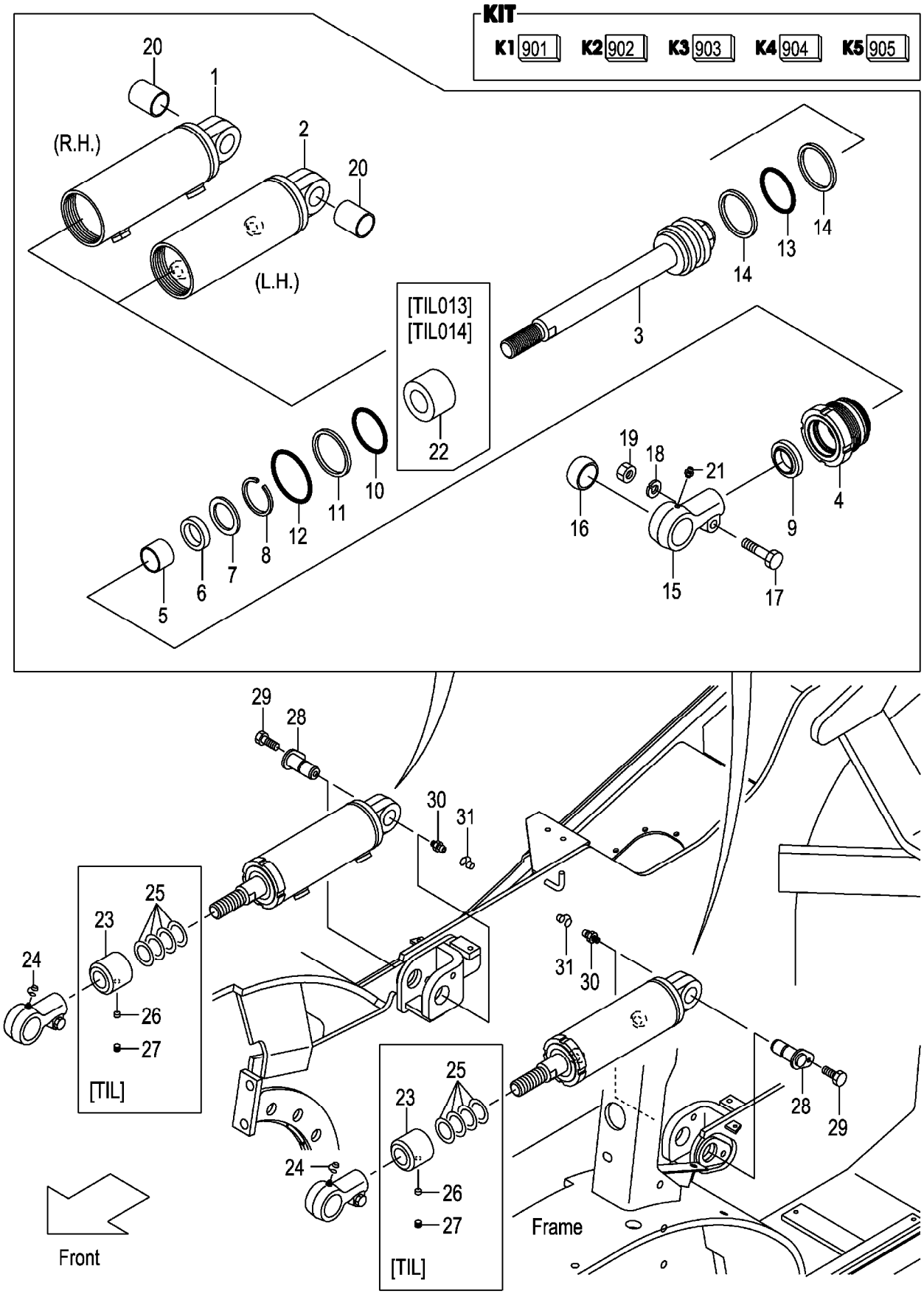

A:FG30C3 FG30T3 FG30W3
B:FD30C3 FD30T3 FD30W3

Item No	Part No.	Mark	Description		Req'd	Remarks : Serial No.
A1	22N58-50101		CYL-ASSY,TILT,RH	ﾃｨﾙﾄｼﾘﾝﾀﾞｱｯｾﾝ	1	(6-12 DEG.) INC.1,3-21
-	22N58-50131		CYL-ASSY,TILT,RH	ﾃｨﾙﾄｼﾘﾝﾀﾞｱｯｾﾝ	1	[TIL013](3-3 DEG.) INC.1,3-23
-	22N58-50121		CYL-ASSY,TILT,RH	ﾃｨﾙﾄｼﾘﾝﾀﾞｱｯｾﾝ	1	[TIL014](3-6 DEG.) INC.1,3-23
-	22N58-50111		CYL-ASSY,TILT,RH	ﾃｨﾙﾄｼﾘﾝﾀﾞｱｯｾﾝ	1	[TIL016](6-6 DEG.) INC.1,3-21,23
-	22N58-50141		CYL-ASSY,TILT,RH	ﾃｨﾙﾄｼﾘﾝﾀﾞｱｯｾﾝ	1	[TIL017](6-10 DEG.) INC.1,3-21,23
A2	22N58-50201		CYL-ASSY,TILT,LH	ﾃｨﾙﾄｼﾘﾝﾀﾞｱｯｾﾝ	1	(6-12 DEG.) INC.2-21
-	22N58-50231		CYL-ASSY,TILT,LH	ﾃｨﾙﾄｼﾘﾝﾀﾞｱｯｾﾝ	1	[TIL013](3-3 DEG.) INC.2-23
-	22N58-50221		CYL-ASSY,TILT,LH	ﾃｨﾙﾄｼﾘﾝﾀﾞｱｯｾﾝ	1	[TIL014](3-6 DEG.) INC.2-23
-	22N58-50211		CYL-ASSY,TILT,LH	ﾃｨﾙﾄｼﾘﾝﾀﾞｱｯｾﾝ	1	[TIL016](6-6 DEG.) INC.2-21,23
-	22N58-50241		CYL-ASSY,TILT,LH	ﾃｨﾙﾄｼﾘﾝﾀﾞｱｯｾﾝ	1	[TIL017](6-10 DEG.) INC.2-21,23
901	22N58-52921	K1	KIT,REPAIR,CYL	ﾘﾍﾟｱｷｯﾄ	2	INC.6,9-14
902	22N58-52901	K2	KIT,CYL-TUBE,RH	ｼﾘﾝﾀﾞﾁｭｰﾌﾞｷｯﾄ	1	INC.1,20
903	22N58-52911	K3	KIT,CYL-TUBE,LH	ｼﾘﾝﾀﾞﾁｭｰﾌﾞｷｯﾄ	1	INC.2,20
904	22N58-52931	K4	KIT,ROD-HEAD	ﾛｯﾄﾞﾍｯﾄﾞｷｯﾄ	2	INC.15,16
905	22N58-52941	K5	KIT,CYL-HEAD	ｼﾘﾝﾀﾞﾍｯﾄﾞｷｯﾄ	2	INC.4,5
1	NO PART NO.	#*	TUBE,CYL,RH	ﾁｭｰﾌﾞ	1	
2	NO PART NO.	#*	TUBE,CYL,LH	ﾁｭｰﾌﾞ	1	
3	22N58-52801		ROD,PISTON	ﾛｯﾄﾞ	2	
4	NO PART NO.	#*	HEAD,CYL	ﾍｯﾄﾞ	2	
5	NO PART NO.	#*	BUSHING	ﾌﾞｯｼﾝｸﾞ	2	
6	NO PART NO.	#*	U-RING	Uﾘﾝｸﾞ	2	
7	22N58-52811		SPACER	ｽﾍﾟｰｻ	2	
8	22N58-52821		RING,SNAP	ｽﾅｯﾌﾟﾘﾝｸﾞ	2	
9	NO PART NO.	#*	RING,WIPER	ﾘﾝｸﾞ	2	
10	NO PART NO.	#*	O-RING	Oﾘﾝｸﾞ	2	
11	NO PART NO.	#*	RING,BACK-UP	ﾘﾝｸﾞ	2	
12	NO PART NO.	#*	O-RING	Oﾘﾝｸﾞ	2	
13	NO PART NO.	#*	O-RING	Oﾘﾝｸﾞ	2	
14	NO PART NO.	#*	RING,BACK-UP	ﾘﾝｸﾞ	4	
15	NO PART NO.	#*	HEAD,ROD	ﾍｯﾄﾞ	2	
16	NO PART NO.	#*	BUSHING,PIN	ﾌﾞｯｼﾝｸﾞ	2	
17	22N58-52831		BOLT	ﾎﾞﾙﾄ	2	
18	22N58-52841		WASHER	ﾜｯｼｬ	2	
19	22N58-52851		NUT	ﾅｯﾄ	2	
20	NO PART NO.	#*	BUSHING,PIN	ﾌﾞｯｼﾝｸﾞ	2	
21	22N58-52861		NIPPLE,GREASE	ﾆｯﾌﾟﾙ	2	
22	22N58-52871		SPACER	ｽﾍﾟｰｻ	2	[TIL013][TIL014] (3-3,3-6 DEG.)
23	22N58-52111		SPACER	ｽﾍﾟｰｻ	2	[TIL013](3-3 DEG.)
-	22N58-52101		SPACER	ｽﾍﾟｰｻ	2	[TIL014][TIL016] (3-6,6-6 DEG.)
-	22N58-52121		SPACER	ｽﾍﾟｰｻ	2	[TIL017](6-10 DEG.)
24	22199-12401		CAP,NIPPLE	ｷｬｯﾌﾟ	2	
25	23658-52101		SHIM	ｼﾑ	8	[TIL013][TIL014] (3-3,3-6 DEG.)

FIG.186 TILT CYLINDER

(F7038510) ﾃｨﾙﾄｼﾘﾝﾀﾞ

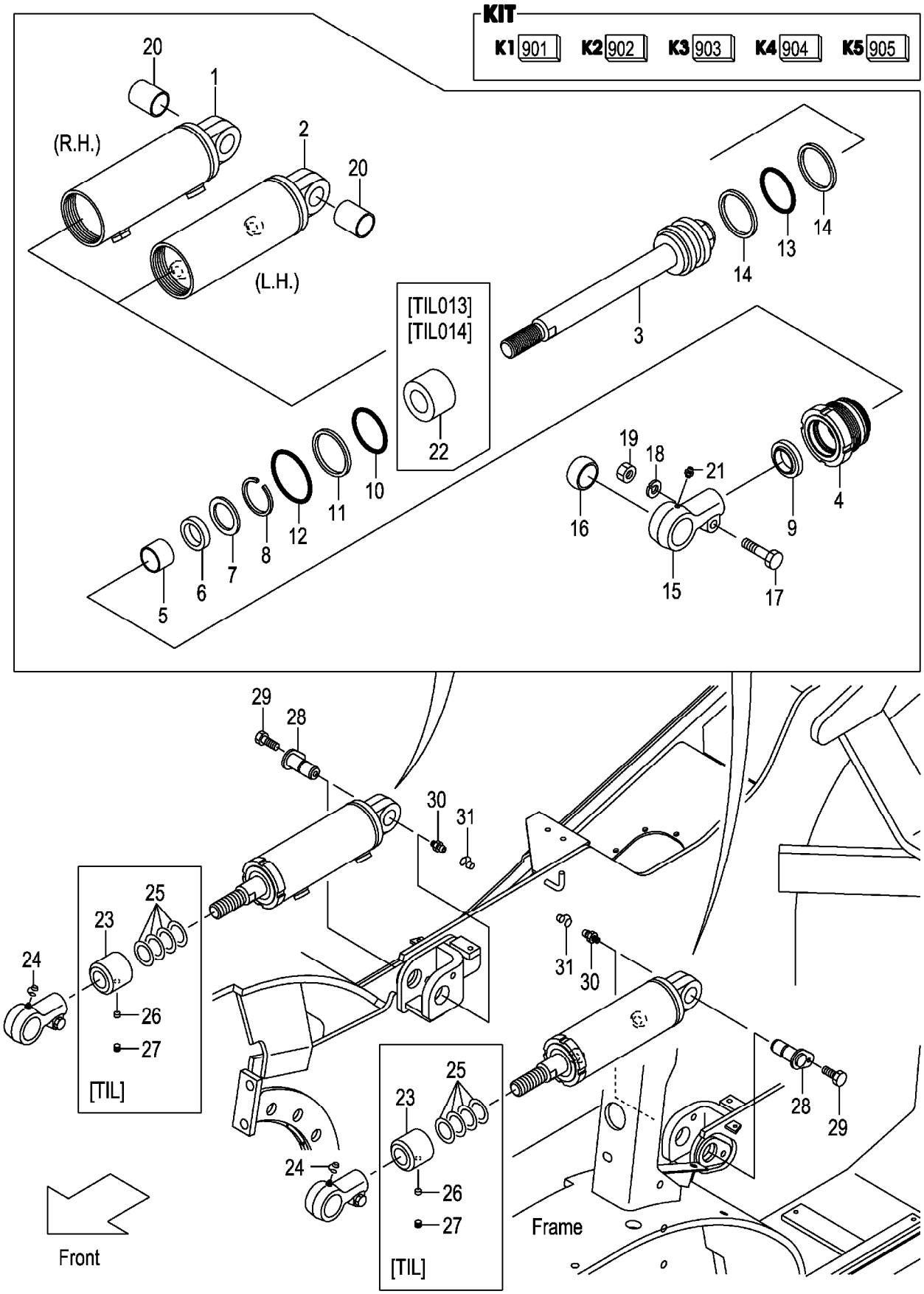

A:FG30C3 FG30T3 FG30W3
B:FD30C3 FD30T3 FD30W3

Item No	Part No.	Mark	Description		Req'd	Remarks : Serial No.
-	23658-52101		SHIM	ｼﾑ	8	[TIL016][TIL017] (6-6,6-10 DEG.)
26	01066-10012		SCREW,SET	ｽｸﾘｭ	2	[TIL013][TIL014] (3-3,3-6 DEG.)
-	01066-10012		SCREW,SET	ｽｸﾘｭ	2	[TIL016][TIL017] (6-6,6-10 DEG.)
27	23658-52401		PLUG,NYLON	ﾌﾟﾗｸﾞ	2	[TIL013][TIL014] (3-3,3-6 DEG.)
-	23658-52401		PLUG,NYLON	ﾌﾟﾗｸﾞ	2	[TIL016][TIL017] (6-6,6-10 DEG.)
28	22N58-52301		PIN	ﾋﾟﾝ	2	
29	01186-10016		BOLT	ﾎﾞﾙﾄ	2	
30	04901-00100		FITTING	ﾌｨｯﾃｨﾝｸﾞ	2	
31	22199-12401		CAP,NIPPLE	ｷｬｯﾌﾟ	2	

M E M O

M E M O

FIG.187 TILT CYLINDER BOOT [TLB][FC]

(F7038520) ﾃｨﾙﾄｼﾘﾝﾀﾞﾌﾞｰﾂ

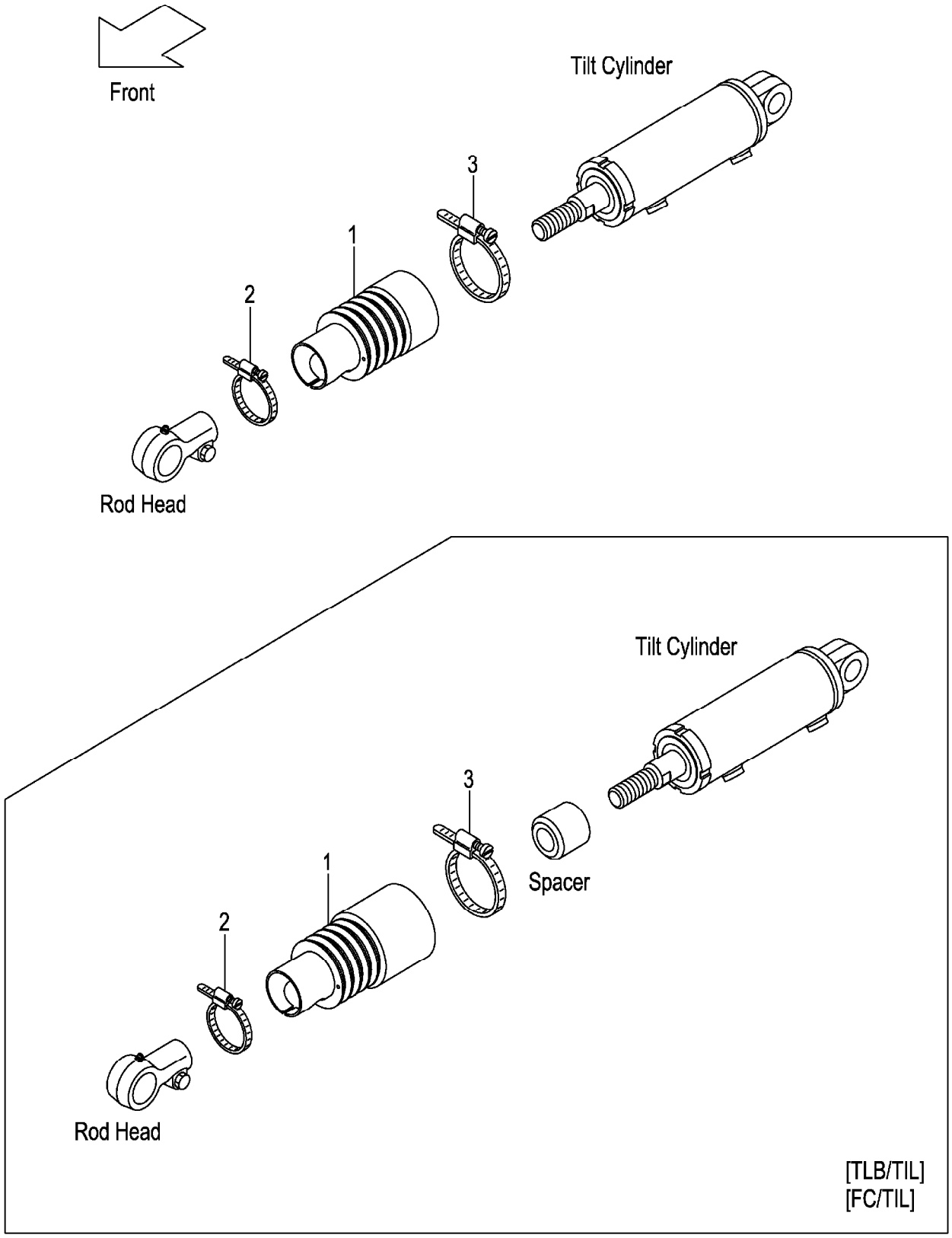

A:FG30C3 FG30T3 FG30W3
B:FD30C3 FD30T3 FD30W3

Item No	Part No.	Mark	Description	Req'd	Remarks : Serial No.
A1	22N58-50301		BOOT-ASSY,TILT-CYL ﾃｨﾙﾄｼﾘﾝﾀﾞﾌﾞｰﾂｱｯｾﾝ	2	[TLB][FC](6-12 DEG.) INC.1-3
-	22N58-50311		BOOT-ASSY,TILT-CYL ﾃｨﾙﾄｼﾘﾝﾀﾞﾌﾞｰﾂｱｯｾﾝ	2	[TLB/TIL013&014] (3-3,3-6 DEG.) INC.1-3
-	22N58-50311		BOOT-ASSY,TILT-CYL ﾃｨﾙﾄｼﾘﾝﾀﾞﾌﾞｰﾂｱｯｾﾝ	2	[TLB/TIL016&017] (6-6,6-10 DEG.) INC.1-3
-	22N58-50311		BOOT-ASSY,TILT-CYL ﾃｨﾙﾄｼﾘﾝﾀﾞﾌﾞｰﾂｱｯｾﾝ	2	[FC/TIL013&014](3-3,3-6 DEG.) INC.1-3
-	22N58-50311		BOOT-ASSY,TILT-CYL ﾃｨﾙﾄｼﾘﾝﾀﾞﾌﾞｰﾂｱｯｾﾝ	2	[FC/TIL016&017] (6-6,6-10 DEG.) INC.1-3
1	22N58-53001		BOOT,TILT-CYL ﾌﾞｰﾂ	2	[TLB][FC](6-12 DEG.)
-	22N58-53101		BOOT,TILT-CYL ﾌﾞｰﾂ	2	[TLB/TIL013&014] [FC/TIL013&014](3-3,3-6 DEG.)
-	22N58-53101		BOOT,TILT-CYL ﾌﾞｰﾂ	2	[TLB/TIL016&017] [FC/TIL016&017] (6-6,6-10 DEG.)
2	216G8-53001		BAND,50 ﾊﾞﾝﾄﾞ	2	[TLB][FC]
-	216G8-53011		BAND,55 ﾊﾞﾝﾄﾞ	(2)	[TLB][FC]
3	224T8-53021		BAND,115 ﾊﾞﾝﾄﾞ	2	[TLB][FC]

FIG.188 DECAL (1/2)

(F7039110) ﾃﾞｶﾙ(1/2)

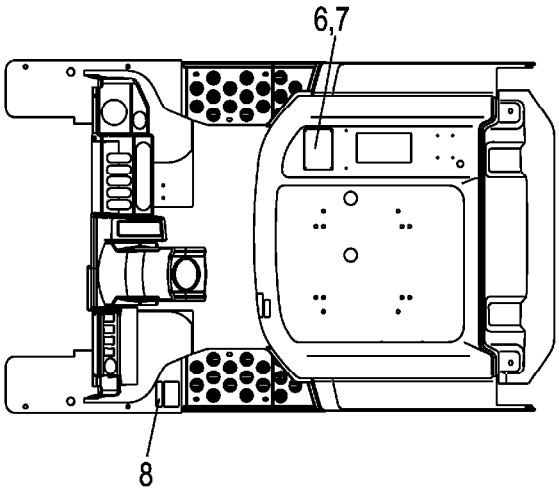

KIT
K1 901

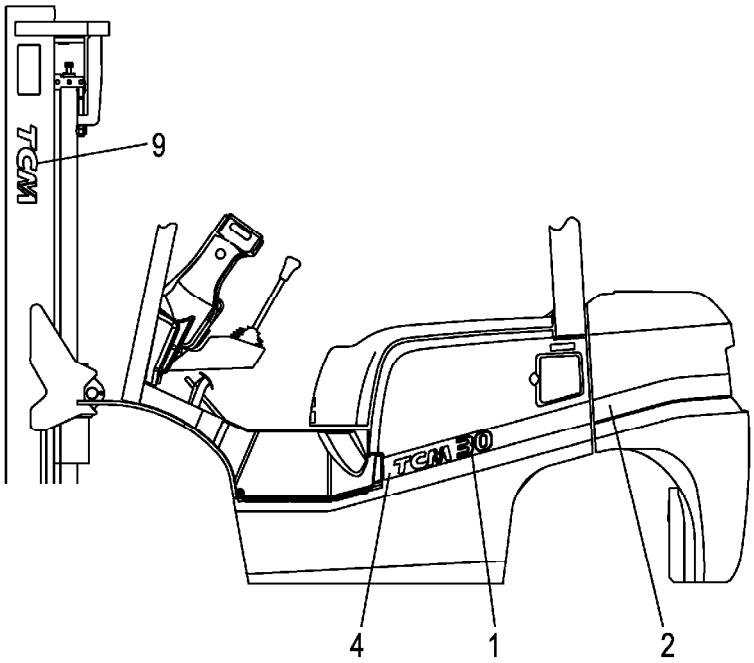

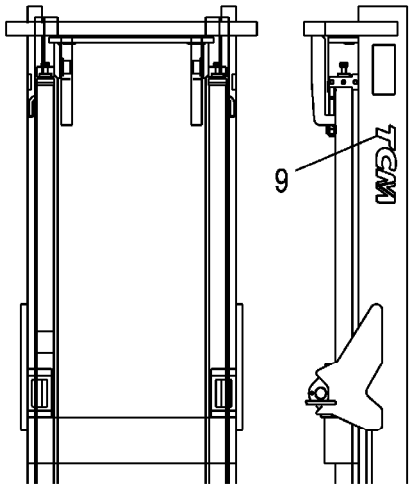

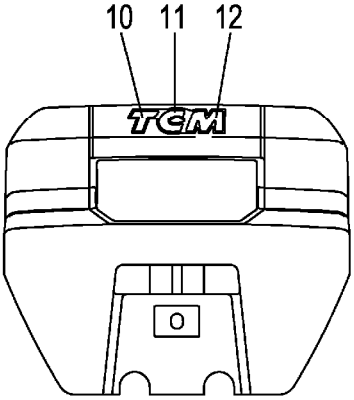

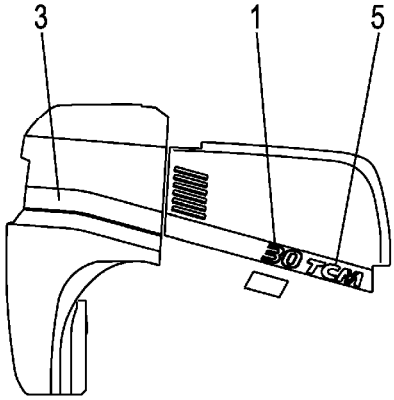

A:FG30C3 FG30T3 C:FD30C3 FD30T3
B:FG30W3 D:FD30W3

Item No	Part No.	Mark	Description	Req'd	Remarks : Serial No.
901	C-11452-2B5-D	K1	KIT,DECAL,JPN デカルキット	1	A,B INC.8,9,FIG.189:3-15
-	C-11452-2N5-D	K1	KIT,DECAL,JPN デカルキット	1	C,D INC.8,9,FIG.189:3-15
-	C-11452-2B0-E	K1	KIT,DECAL,ENGLISH デカルキット	1	A [EXB/ENGLISH] INC.8,9,FIG.190:3-11,16-23
-	C-11452-2N0-E	K1	KIT,DECAL,ENGLISH デカルキット	1	C [EXB/ENGLISH] INC.8,9,FIG.190:3-11,16-23
-	C-11452-2B0-S	K1	KIT,DECAL,SPANISH デカルキット	1	A [EXB/SPANISH] INC.8,9,FIG.190:3-11,15-23
-	C-11452-2N0-S	K1	KIT,DECAL,SPANISH デカルキット	1	C [EXB/SPANISH] INC.8,9,FIG.190:3-11,15-23
-	C-11452-2B0-BF	K1	KIT,DECAL,FRENCH デカルキット	1	A [EXB/FRENCH] INC.8,9,FIG.190:3-11,15-23
-	C-11452-2N0-BF	K1	KIT,DECAL,FRENCH デカルキット	1	C [EXB/FRENCH] INC.8,9,FIG.190:3-11,15-23
-	C-11452-2B0-C	K1	KIT,DECAL,CHINESE デカルキット	1	A [EXB/CHINESE] INC.8,9,FIG.190:3-12, 15-21,23
-	C-11452-2N0-C	K1	KIT,DECAL,CHINESE デカルキット	1	C [EXB/CHINESE] INC.8,9,FIG.190:3-12, 15-21,23
-	C-11452-2B0-R	K1	KIT,DECAL,RUSSIAN デカルキット	1	A [EXB/RUSSIAN] INC.8,9,FIG.190:3-11,13-23
-	C-11452-2N0-R	K1	KIT,DECAL,RUSSIAN デカルキット	1	C [EXB/RUSSIAN] INC.8,9,FIG.190:3-11,13-23
-	C-11452-2B0-E	K1	KIT,DECAL,ENGLISH デカルキット	1	A [EXC] INC.8,9,FIG.191:3-19
-	C-11452-2N0-E	K1	KIT,DECAL,ENGLISH デカルキット	1	C [EXC] INC.8,9,FIG.191:3-19
-	C-11452-2B0-E	K1	KIT,DECAL,ENGLISH デカルキット	1	A [EXE/ENGLISH] INC.8,9,FIG.192:3-11,13-20
-	C-11452-2N0-E	K1	KIT,DECAL,ENGLISH デカルキット	1	C [EXE/ENGLISH] INC.8,9,FIG.192:3-11,13-20
-	C-11452-2B0-S	K1	KIT,DECAL,SPANISH デカルキット	1	A [EXE/SPANISH] INC.8,9,FIG.192:3-20

FIG.188 DECAL (1/2)

(F7039110) ﾃﾞｶﾙ(1/2)

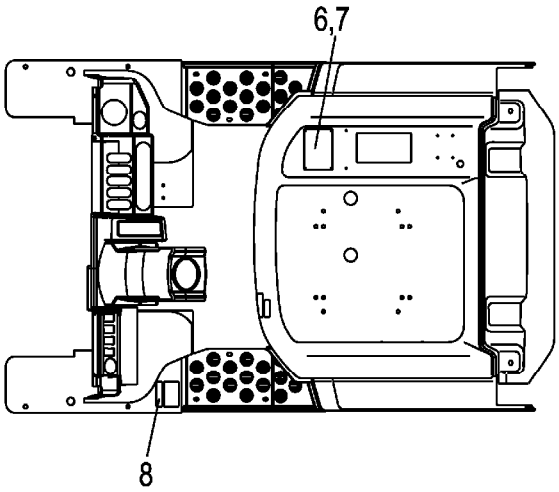

KIT
K1 901

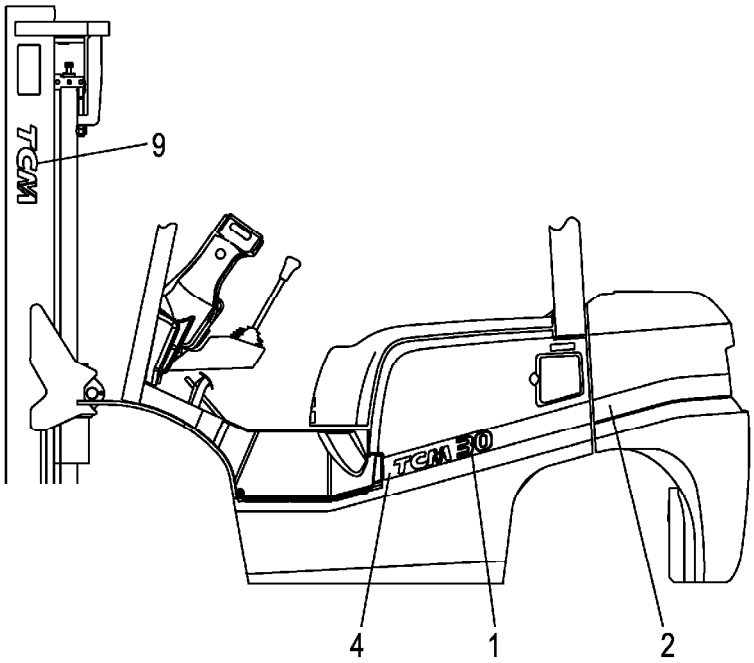

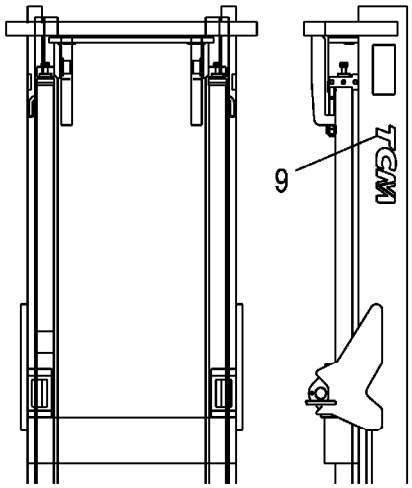

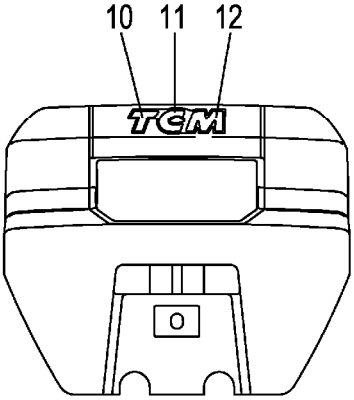

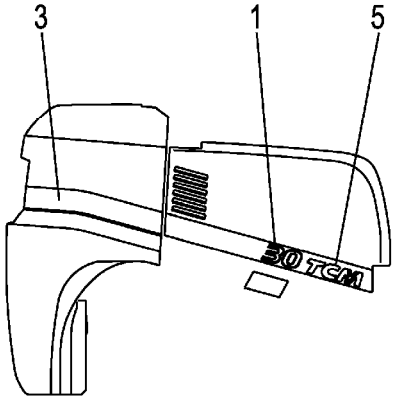

A:FG30C3 FG30T3 C:FD30C3 FD30T3
B:FG30W3 D:FD30W3

Item No	Part No.	Mark	Description	Req'd	Remarks : Serial No.
-	C-11452-2N0-S	K1	KIT,DECAL,SPANISH デカルキット	1	C [EXE/SPANISH] INC.8,9,FIG.192:3-20
-	C-11452-2B0-BF	K1	KIT,DECAL,FRENCH デカルキット	1	A [EXE/FRENCH] INC.8,9,FIG.192:3-20
-	C-11452-2N0-BF	K1	KIT,DECAL,FRENCH デカルキット	1	C [EXE/FRENCH] INC.8,9,FIG.192:3-20
-	C-11452-2B0-G	K1	KIT,DECAL,GERMAN デカルキット	1	A [EXE/GERMAN] INC.8,9,FIG.192:3-20
-	C-11452-2N0-G	K1	KIT,DECAL,GERMAN デカルキット	1	C [EXE/GERMAN] INC.8,9,FIG.192:3-20
-	C-11452-2B0-O	K1	KIT,DECAL,DUTCH デカルキット	1	A [EXE/DUTCH] INC.8,9,FIG.192:3-20
-	C-11452-2N0-O	K1	KIT,DECAL,DUTCH デカルキット	1	C [EXE/DUTCH] INC.8,9,FIG.192:3-20
-	C-11452-2B0-DN	K1	KIT,DECAL,DANISH デカルキット	1	A [EXE/DANISH] INC.8,9,FIG.192:3-20
-	C-11452-2N0-DN	K1	KIT,DECAL,DANISH デカルキット	1	C [EXE/DANISH] INC.8,9,FIG.192:3-20
-	C-11452-2B0-I	K1	KIT,DECAL,ITALIAN デカルキット	1	A [EXE/ITALIAN] INC.8,9,FIG.192:3-20
-	C-11452-2N0-I	K1	KIT,DECAL,ITALIAN デカルキット	1	C [EXE/ITALIAN] INC.8,9,FIG.192:3-20
-	C-11452-2B0-GR	K1	KIT,DECAL,GREEK デカルキット	1	A [EXE/GREEK] INC.8,9,FIG.192:3-20
-	C-11452-2N0-GR	K1	KIT,DECAL,GREEK デカルキット	1	C [EXE/GREEK] INC.8,9,FIG.192:3-20
-	C-11452-2B0-P	K1	KIT,DECAL,PORTUGUESE デカルキット	1	A [EXE/PORTUGUESE] INC.8,9,FIG.192:3-20
-	C-11452-2N0-P	K1	KIT,DECAL,PORTUGUESE デカルキット	1	C [EXE/PORTUGUESE] INC.8,9,FIG.192:3-20
-	C-11452-2B0-NR	K1	KIT,DECAL,NORWEGIAN デカルキット	1	A [EXE/NORWEGIAN] INC.8,9,FIG.192:3-20

FIG.188 DECAL (1/2)

(F7039110) ﾃﾞｶﾙ(1/2)

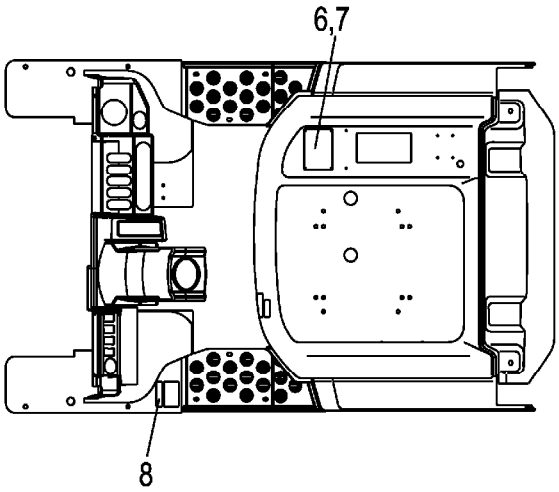

KIT
K1 901

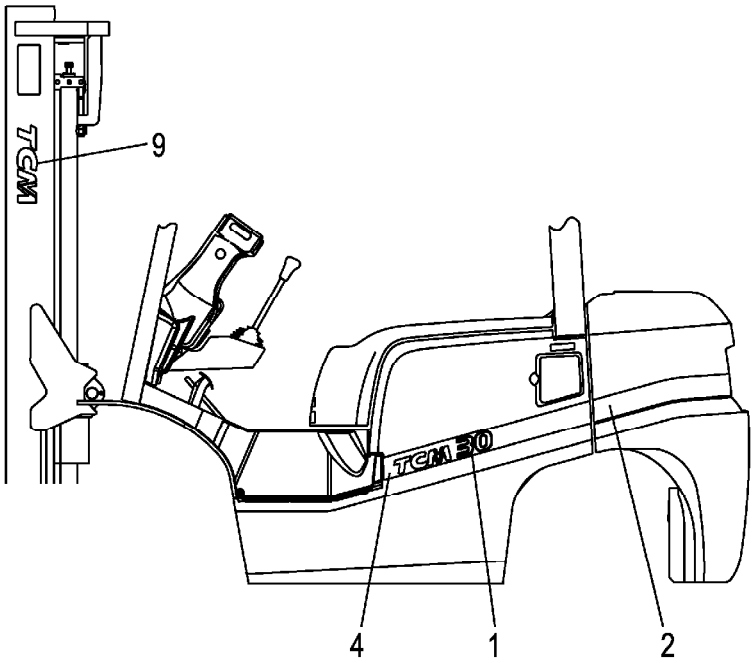

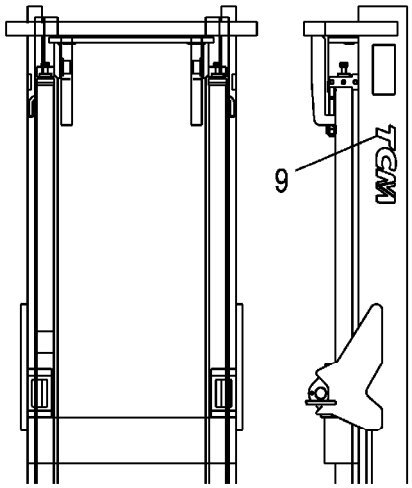

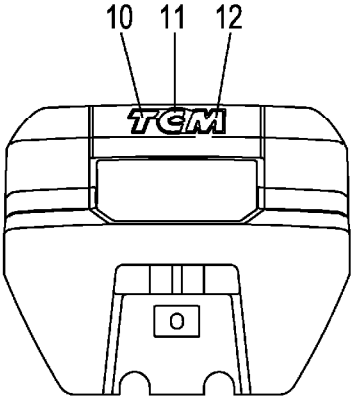

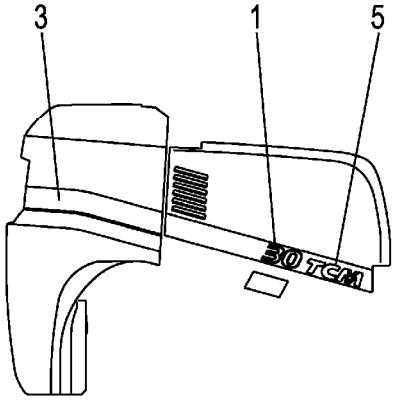

A:FG30C3 FG30T3 C:FD30C3 FD30T3
B:FG30W3 D:FD30W3

Item No	Part No.	Mark	Description	Req'd	Remarks : Serial No.
-	C-11452-2N0-NR	K1	KIT,DECAL,NORWEGIAN デカルキット	1	C [EXE/NORWEGIAN] INC.8,9,FIG.192:3-20
-	C-11452-2B0-PL	K1	KIT,DECAL,POLISH デカルキット	1	A [EXE/POLISH] INC.8,9,FIG.192:3-20
-	C-11452-2N0-PL	K1	KIT,DECAL,POLISH デカルキット	1	C [EXE/POLISH] INC.8,9,FIG.192:3-20
-	C-11452-2B0-H	K1	KIT,DECAL,HUNGARIAN デカルキット	1	A [EXE/HUNGARIAN] INC.8,9,FIG.192:3-20
-	C-11452-2N0-H	K1	KIT,DECAL,HUNGARIAN デカルキット	1	C [EXE/HUNGARIAN] INC.8,9,FIG.192:3-20
-	C-11452-2B0-CZ	K1	KIT,DECAL,CZECH デカルキット	1	A [EXE/CZECH] INC.8,9,FIG.192:3-20
-	C-11452-2N0-CZ	K1	KIT,DECAL,CZECH デカルキット	1	C [EXE/CZECH] INC.8,9,FIG.192:3-20
-	C-11452-2B0-TR	K1	KIT,DECAL, デカルキット	1	A [EXE/TURKISH] INC.8,9,FIG.192:3-20
-	C-11452-2N0-TR	K1	KIT,DECAL, デカルキット	1	C [EXE/TURKISH] INC.8,9,FIG.192:3-20
-	C-11452-2B0-E	K1	KIT,DECAL,ENGLISH デカルキット	1	A [EXK] INC.8,9,FIG.193:3-19
-	C-11452-2N0-E	K1	KIT,DECAL,ENGLISH デカルキット	1	C [EXK] INC.8,9,FIG.193:3-19
-	C-11452-2B0-E	K1	KIT,DECAL,ENGLISH デカルキット	1	A [EXN/ENGLISH] INC.8,9,FIG.194:3-11,13-20
-	C-11452-2N0-E	K1	KIT,DECAL,ENGLISH デカルキット	1	C [EXN/ENGLISH] INC.8,9,FIG.194:3-11,13-20
-	C-11452-2B0-DN	K1	KIT,DECAL,DANISH デカルキット	1	A [EXN/DANISH] INC.8,9,FIG.194:3-20
-	C-11452-2N0-DN	K1	KIT,DECAL,DANISH デカルキット	1	C [EXN/DANISH] INC.8,9,FIG.194:3-20
-	C-11452-2B0-SW	K1	KIT,DECAL,SWEDISH デカルキット	1	A [EXN/SWEDISH] INC.8,9,FIG.194:3-20
-	C-11452-2N0-SW	K1	KIT,DECAL,SWEDISH デカルキット	1	C [EXN/SWEDISH] INC.8,9,FIG.194:3-20

FIG.188 DECAL (1/2)

(F7039110) ﾃﾞｶﾙ(1/2)

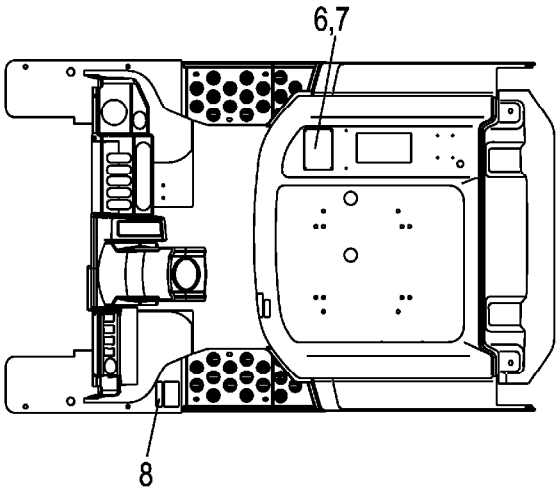

KIT
K1 901

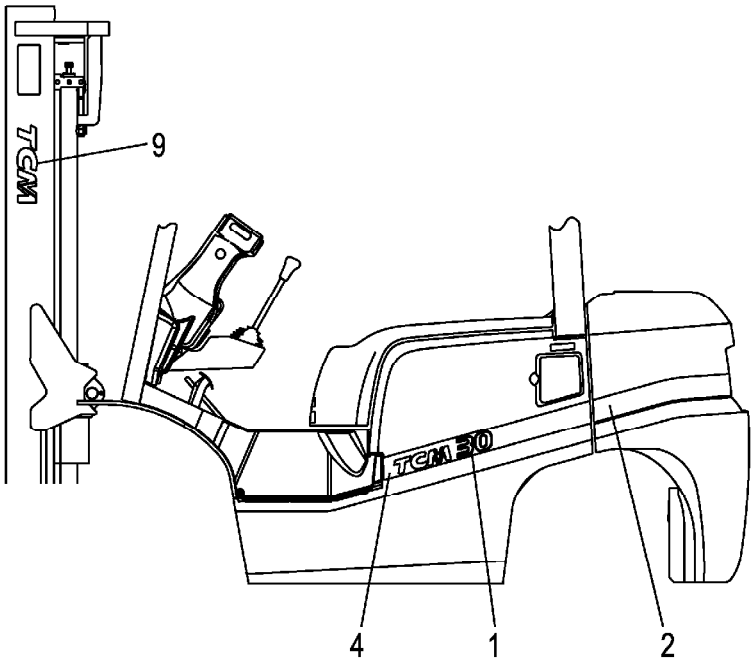

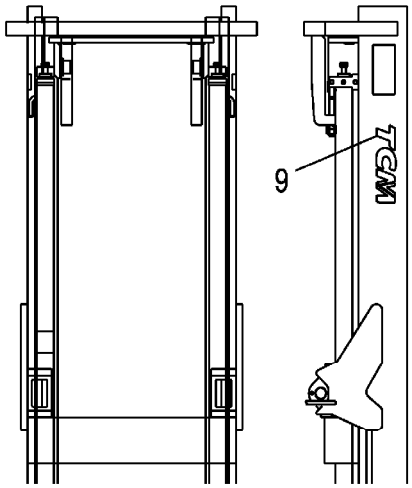

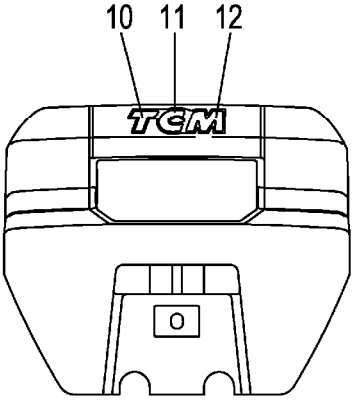

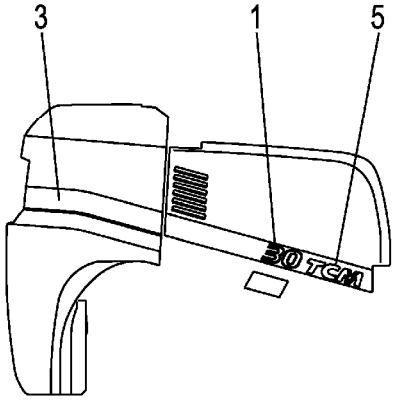

A:FG30C3 FG30T3 C:FD30C3 FD30T3
B:FG30W3 D:FD30W3

Item No	Part No.	Mark	Description		Req'd	Remarks : Serial No.
-	C-11452-2B0-FI	K1	KIT,DECAL,FINNISH	ﾃﾞｶﾙｷｯﾄ	1	A [EXN/FINNISH] INC.8,9,FIG.194:3-20
-	C-11452-2N0-FI	K1	KIT,DECAL,FINNISH	ﾃﾞｶﾙｷｯﾄ	1	C [EXN/FINNISH] INC.8,9,FIG.194:3-20
1	22N99-12281		DECAL,MODEL-MARK,30	ﾃﾞｶﾙ	2	
2	22N99-12151		LINE,WEIGHT,LH	ﾗｲﾝ	1	
-	22N99-12171		LINE,WEIGHT,LH	ﾗｲﾝ	1	[ATF]
3	22N99-12161		LINE,WEIGHT,RH	ﾗｲﾝ	1	
-	22N99-12181		LINE,WEIGHT,RH	ﾗｲﾝ	1	[ATF]
4	22N59-12101		LINE,COVER,LH	ﾗｲﾝ	1	
5	22N59-12111		LINE,COVER,RH	ﾗｲﾝ	1	
6	22N99-12601		CHART,CAPACITY,3.0T	ﾁｬｰﾄ	1	(VM200-500)
-	222Q9-12011		CHART,CAPACITY,3.0T	ﾁｬｰﾄ	1	(VM550-600)
-	514A3-82331		CHART,CAPACITY	ﾁｬｰﾄ	1	A,C [EXB/SPANISH][EXE/SPANISH]
-	514A3-82341		CHART,CAPACITY	ﾁｬｰﾄ	1	A,C [EXB/FRENCH][EXE/FRENCH]
-	63110-18921		CHART,CAPACITY	ﾁｬｰﾄ	1	A,C [EXB/CHINESE]
-	524T3-84031		CHART,CAPACITY	ﾁｬｰﾄ	1	A,C [EXB/RUSSIAN]
-	514A3-82301		CHART,CAPACITY	ﾁｬｰﾄ	1	A,C [EXC]
-	514A3-82301		CHART,CAPACITY	ﾁｬｰﾄ	1	A,C [EXE/ENGLISH][EXN/ENGLISH]
-	514A3-82321		CHART,CAPACITY	ﾁｬｰﾄ	1	A,C [EXE/GERMAN]
-	514A3-82351		CHART,CAPACITY	ﾁｬｰﾄ	1	A,C [EXE/DUTCH]
-	514A3-82361		CHART,CAPACITY	ﾁｬｰﾄ	1	A,C [EXE/DANISH][EXN/DANISH]
-	514A3-82371		CHART,CAPACITY	ﾁｬｰﾄ	1	A,C [EXE/ITALIAN]
-	514A3-82381		CHART,CAPACITY	ﾁｬｰﾄ	1	A,C [EXE/GREEK]
-	514A3-82391		CHART,CAPACITY	ﾁｬｰﾄ	1	A,C [EXE/PORTUGUESE]
-	529F3-82501		CHART,CAPACITY	ﾁｬｰﾄ	1	A,C [EXE/NORWEGIAN]
-	529F3-82511		CHART,CAPACITY	ﾁｬｰﾄ	1	A,C [EXE/POLISH]
-	529F3-82521		CHART,CAPACITY	ﾁｬｰﾄ	1	A,C [EXE/HUNGARIAN]
-	529F3-82531		CHART,CAPACITY	ﾁｬｰﾄ	1	A,C [EXE/CZECH]
-	529F3-82541		CHART,CAPACITY	ﾁｬｰﾄ	1	A,C [EXE/TURKISH]

FIG.188 DECAL (1/2)

(F7039110) ﾃﾞｶﾙ(1/2)

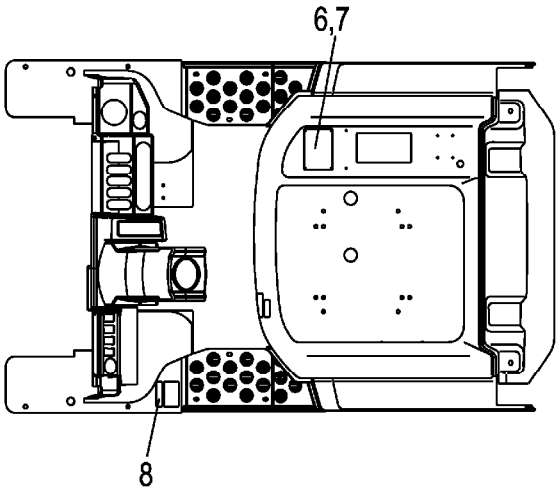

KIT
K1 901

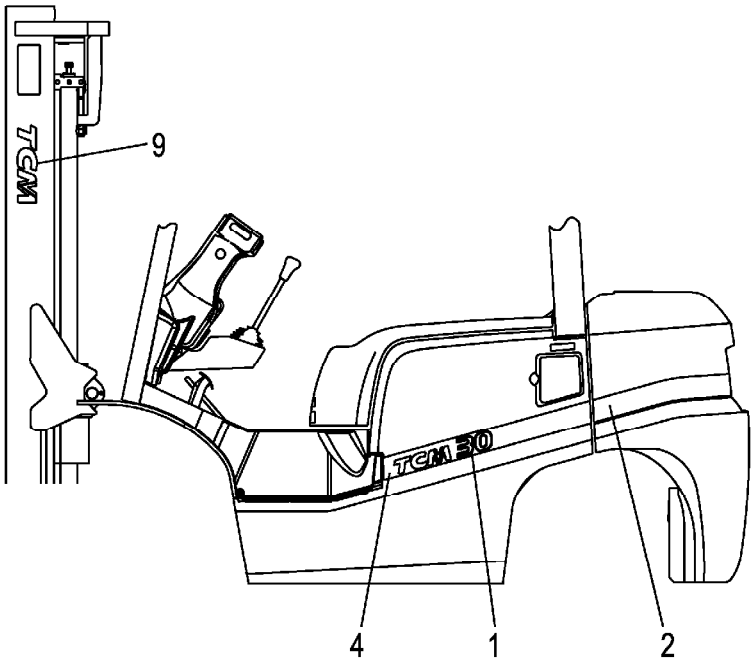

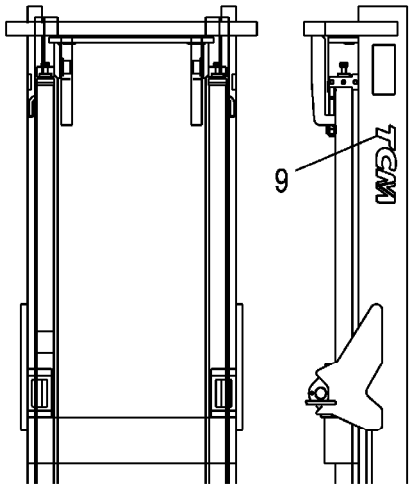

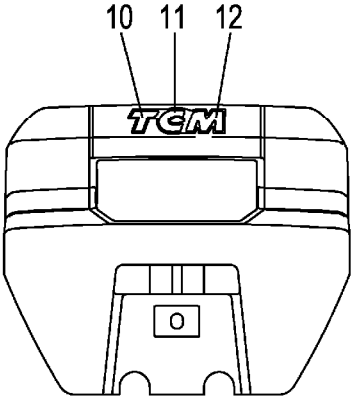

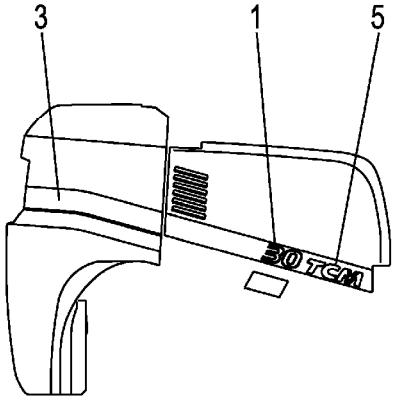

A:FG30C3 FG30T3 C:FD30C3 FD30T3
B:FG30W3 D:FD30W3

Item No	Part No.	Mark	Description		Req'd	Remarks : Serial No.
-	529F3-82111		CHART,CAPACITY	ﾁｬｰﾄ	1	A,C [EXN/SWEDISH]
-	529F3-82101		CHART,CAPACITY	ﾁｬｰﾄ	1	A,C [EXN/FINNISH]
7	02432-01008		RIVET	ﾘﾍﾞｯﾄ	4	
8	27049-12172	*	DECAL,AIR-PRESSURE	ﾃﾞｶﾙ	1	
-	225R9-12142	*	DECAL,AIR-PRESSURE	ﾃﾞｶﾙ	1	A,C [EXB/RUSSIAN]
9	273A9-12242	*	DECAL,TCM	ﾃﾞｶﾙ	2	
10	22N59-12041		DECAL,B/WEIGHT,T	ﾃﾞｶﾙ	1	
11	22N59-12051		DECAL,B/WEIGHT,C	ﾃﾞｶﾙ	1	
12	22N59-12061		DECAL,B/WEIGHT,M	ﾃﾞｶﾙ	1	

FIG.189 DECAL (2/2)

(F7039120) ﾃﾞｶﾙ(2/2)

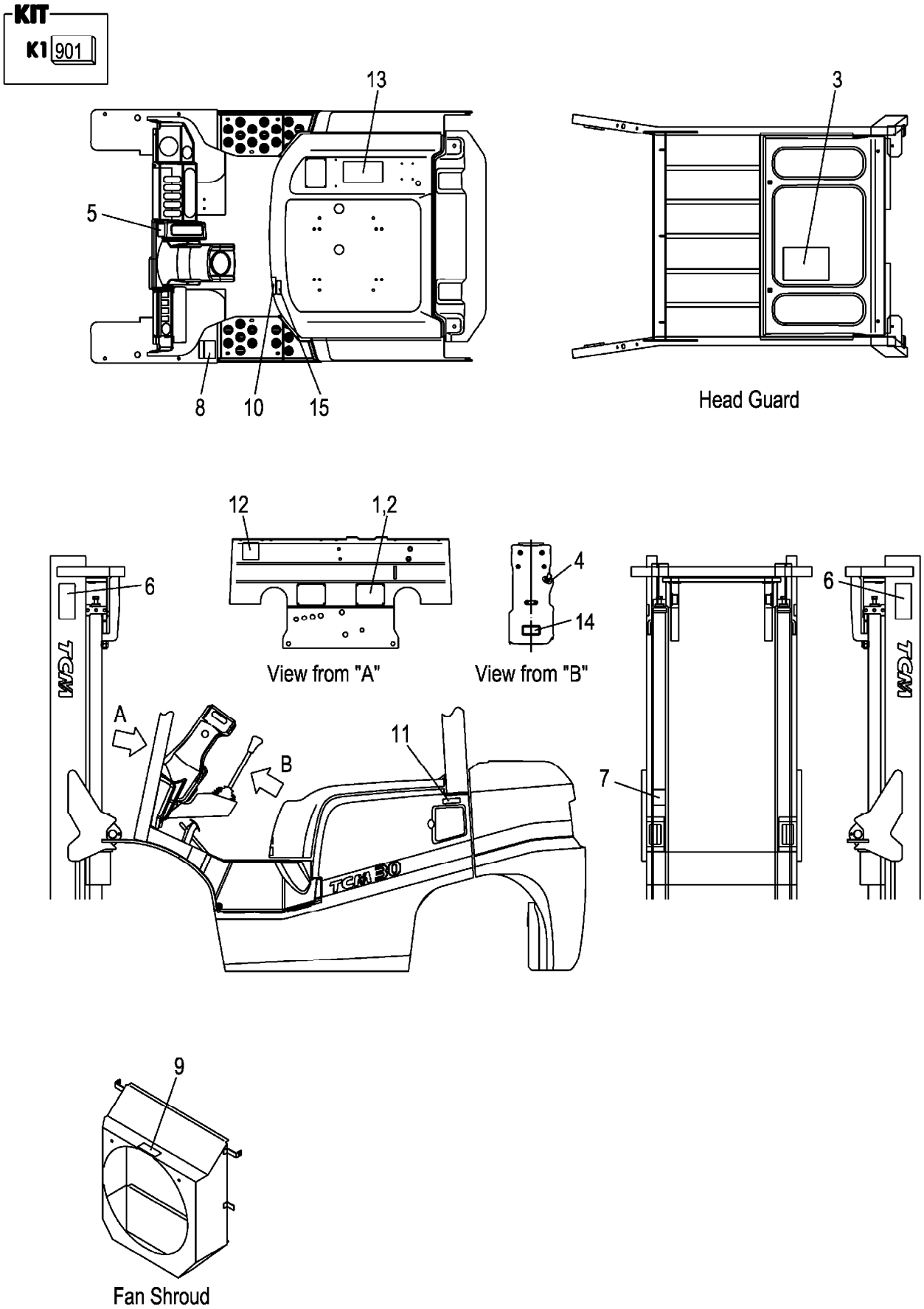

A:FG30C3 FG30T3 FG30W3
B:FD30C3 FD30T3 FD30W3

Item No	Part No.	Mark	Description		Req'd	Remarks : Serial No.
901	C-11452-2B5-D	K1	KIT,DECAL,JPN	ﾃﾞｶﾙｷｯﾄ	1	A INC.3-15,FIG.188:8,9
-	C-11452-2N5-D	K1	KIT,DECAL,JPN	ﾃﾞｶﾙｷｯﾄ	1	B INC.3-15,FIG.188:8,9
1	NO PART NO.	#	PLATE,NAME	ﾌﾟﾚｰﾄ	1	
2	216G9-12131		RIVET	ﾘﾍﾞｯﾄ	4	
3	22N59-12261	*	DECAL,LUBRICATION	ﾃﾞｶﾙ	1	
4	216G9-12071	*	DECAL,STARTER-SWITCH	ﾃﾞｶﾙ	1	
5	214A5-53012	*	DECAL,BRAKE-LEVER	ﾃﾞｶﾙ	1	
6	27419-12062	*	DECAL,MAST-CAUTION	ﾃﾞｶﾙ	2	
7	27419-12072	*	DECAL,CROSS-BEAM	ﾃﾞｶﾙ	1	
8	216G9-12062	*	DECAL,TIRE-CAUTION	ﾃﾞｶﾙ	1	
9	216G9-12052	*	DECAL,FAN-CAUTION	ﾃﾞｶﾙ	1	
10	238F9-12071	*	DECAL,FUEL-CAPACITY	ﾃﾞｶﾙ	1	
11	21239-12501	*	DECAL,GASOLINE	ﾃﾞｶﾙ	1	A
-	239A9-12501	*	DECAL,LIGHT-OIL	ﾃﾞｶﾙ	1	B
12	271A9-12251	*	DECAL,CAUTION	ﾃﾞｶﾙ	1	
13	239A9-12301	*	DECAL,WARNING-PLATE	ﾃﾞｶﾙ	1	
14	26519-12281	*	DECAL,HOSE	ﾃﾞｶﾙ	1	
15	22N59-12351	*	DECAL,BONNET-CAUTION	ﾃﾞｶﾙ	1	

FIG.190 DECAL (2/2)[EXB]

(F70391B0) ﾃﾞｶﾙ(2/2)

KIT

K1	K2	K3	K4	K5
901	902	903	904	905

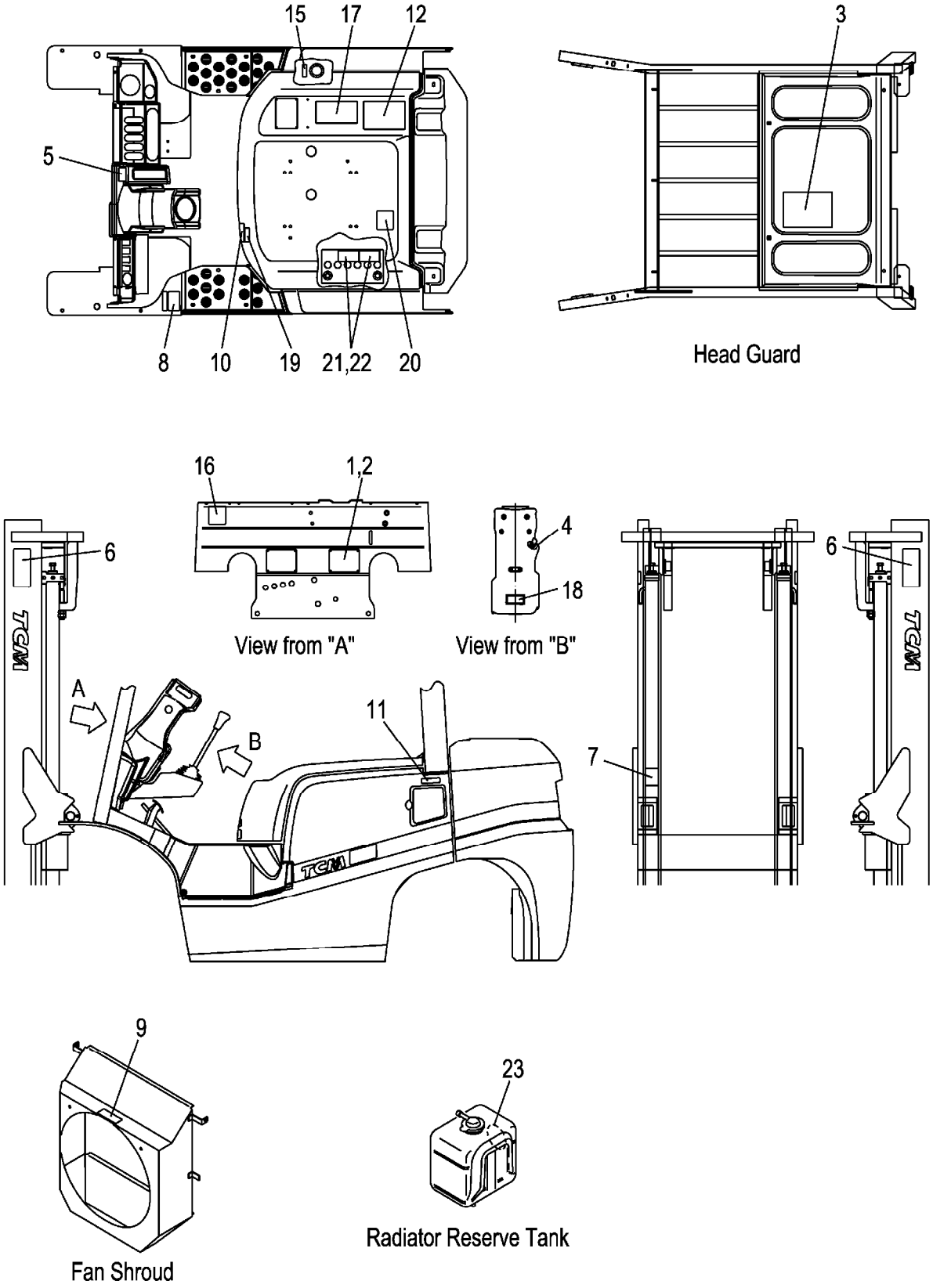

A:FG30C3 FG30T3
B:FD30C3 FD30T3

Item No	Part No.	Mark	Description		Req'd	Remarks : Serial No.
901	C-11452-2B0-E	K1	KIT,DECAL,ENGLISH	ﾃﾞｶﾙｷｯﾄ	1	A [EXB/ENGLISH] INC.3-11,16-23,FIG.188:8,9
-	C-11452-2N0-E	K1	KIT,DECAL,ENGLISH	ﾃﾞｶﾙｷｯﾄ	1	B [EXB/ENGLISH] INC.3-11,16-23,FIG.188:8,9
902	C-11452-2B0-S	K2	KIT,DECAL,SPANISH	ﾃﾞｶﾙｷｯﾄ	1	A [EXB/SPANISH] INC.3-11,15-23,FIG.188:8,9
-	C-11452-2N0-S	K2	KIT,DECAL,SPANISH	ﾃﾞｶﾙｷｯﾄ	1	B [EXB/SPANISH] INC.3-11,15-23,FIG.188:8,9
903	C-11452-2B0-BF	K3	KIT,DECAL,FRENCH	ﾃﾞｶﾙｷｯﾄ	1	A [EXB/FRENCH] INC.3-11,15-23,FIG.188:8,9
-	C-11452-2N0-BF	K3	KIT,DECAL,FRENCH	ﾃﾞｶﾙｷｯﾄ	1	B [EXB/FRENCH] INC.3-11,15-23,FIG.188:8,9
904	C-11452-2B0-C	K4	KIT,DECAL,CHINESE	ﾃﾞｶﾙｷｯﾄ	1	A [EXB/CHINESE] INC.3-12,15-21,23, FIG.188:8,9
-	C-11452-2N0-C	K4	KIT,DECAL,CHINESE	ﾃﾞｶﾙｷｯﾄ	1	B [EXB/CHINESE] INC.3-12,15-21,23, FIG.188:8,9
905	C-11452-2B0-R	K5	KIT,DECAL,RUSSIAN	ﾃﾞｶﾙｷｯﾄ	1	A [EXB/RUSSIAN] INC.3-11,13-23,FIG.188:8,9
-	C-11452-2N0-R	K5	KIT,DECAL,RUSSIAN	ﾃﾞｶﾙｷｯﾄ	1	B [EXB/RUSSIAN] INC.3-11,13-23,FIG.188:8,9
1	NO PART NO.	#	PLATE,NAME	ﾌﾟﾚｰﾄ	1	[EXB/ENGLISH]
-	NO PART NO.	#	PLATE,NAME	ﾌﾟﾚｰﾄ	1	[EXB/SPANISH]
-	NO PART NO.	#	PLATE,NAME	ﾌﾟﾚｰﾄ	1	[EXB/FRENCH]
-	NO PART NO.	#	PLATE,NAME	ﾌﾟﾚｰﾄ	1	[EXB/CHINESE]
-	NO PART NO.	#	PLATE,NAME	ﾌﾟﾚｰﾄ	1	[EXB/RUSSIAN]
2	216G9-12131		RIVET	ﾘﾍﾞｯﾄ	4	[EXB]
3	52N52-72101	*	CHART,LUBRICATION	ﾁｬｰﾄ	1	[EXB/ENGLISH]
-	52N53-82101	*	CHART,LUBRICATION	ﾁｬｰﾄ	1	[EXB/SPANISH]
-	52N53-82111	*	CHART,LUBRICATION	ﾁｬｰﾄ	1	[EXB/FRENCH]
-	52N52-82401	*	CHART,LUBRICATION	ﾁｬｰﾄ	1	[EXB/CHINESE]
-	52N52-82411	*	CHART,LUBRICATION	ﾁｬｰﾄ	1	[EXB/RUSSIAN]
4	216G9-12071	*	DECAL,STARTER-SWITCH	ﾃﾞｶﾙ	1	[EXB]
-	516G3-82011	*	DECAL,STARTER-SWITCH	ﾃﾞｶﾙ	1	[EXB/SPANISH]
-	232W9-12001	*	DECAL,STARTER-SWITCH	ﾃﾞｶﾙ	1	[EXB/RUSSIAN]
5	514A3-82002	*	DECAL,BRAKE-LEVER	ﾃﾞｶﾙ	1	[EXB/ENGLISH]
-	514A3-82012	*	DECAL,BRAKE-LEVER	ﾃﾞｶﾙ	1	[EXB/SPANISH]
-	514A3-82022	*	DECAL,BRAKE-LEVER	ﾃﾞｶﾙ	1	[EXB/FRENCH]
-	514A2-82012	*	DECAL,BRAKE-LEVER	ﾃﾞｶﾙ	1	[EXB/CHINESE]

FIG.190 DECAL (2/2)[EXB]

(F70391B0) ﾃﾞｶﾙ(2/2)

KIT

K1	K2	K3	K4	K5
901	902	903	904	905

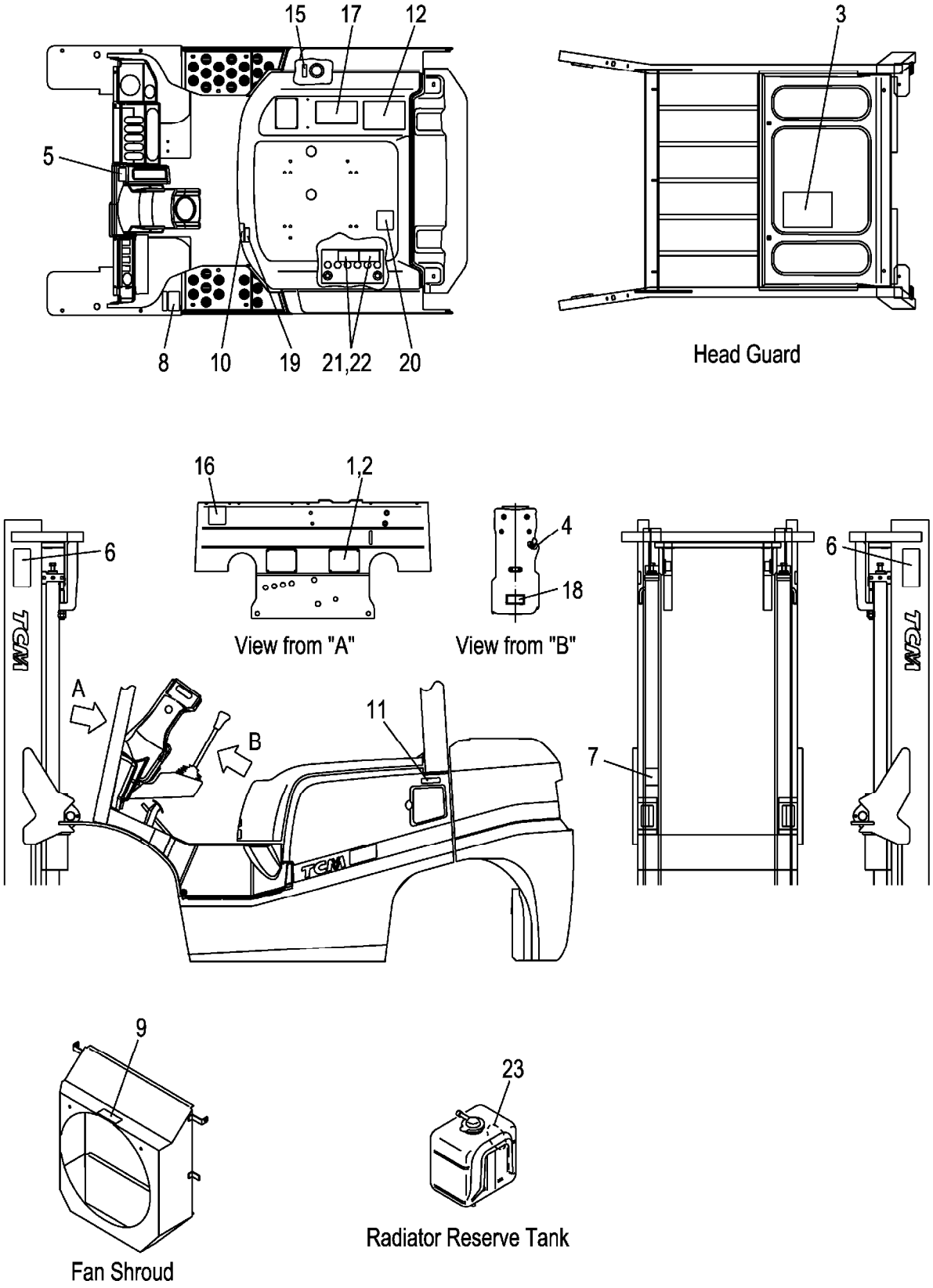

A:FG30C3 FG30T3
B:FD30C3 FD30T3

Item No	Part No.	Mark	Description	Req'd	Remarks : Serial No.
-	225R9-12112	*	DECAL,BRAKE-LEVER デカル	1	[EXB/RUSSIAN]
6	27419-12061	*	DECAL,MAST-CAUTION デカル	2	[EXB]
-	27419-12062	*	DECAL,MAST-CAUTION デカル	2	[EXB/RUSSIAN]
7	27419-12071	*	DECAL,CROSS-BEAM デカル	1	[EXB]
-	27419-12072	*	DECAL,CROSS-BEAM デカル	1	[EXB/RUSSIAN]
8	516G2-72711	*	DECAL,TIRE-CAUTION デカル	1	[EXB/ENGLISH]
-	516G3-82211	*	DECAL,TIRE-CAUTION デカル	1	[EXB/SPANISH]
-	516G3-82221	*	DECAL,TIRE-CAUTION デカル	1	[EXB/FRENCH]
-	516G2-82061	*	DECAL,TIRE-CAUTION デカル	1	[EXB/CHINESE]
-	232W9-12021	*	DECAL,TIRE-CAUTION デカル	1	[EXB/RUSSIAN]
9	516G2-72701	*	DECAL,FAN-CAUTION デカル	1	[EXB/ENGLISH]
-	516G3-82111	*	DECAL,FAN-CAUTION デカル	1	[EXB/SPANISH]
-	516G3-82121	*	DECAL,FAN-CAUTION デカル	1	[EXB/FRENCH]
-	516G2-82051	*	DECAL,FAN-CAUTION デカル	1	[EXB/CHINESE]
-	232W9-12011	*	DECAL,FAN-CAUTION デカル	1	[EXB/RUSSIAN]
10	536G2-82181	*	DECAL,FUEL-CAPACITY デカル	1	[EXB/ENGLISH]
-	536G3-82001	*	DECAL,FUEL-CAPACITY デカル	1	[EXB/SPANISH]
-	536G3-82011	*	DECAL,FUEL-CAPACITY デカル	1	[EXB/FRENCH]
-	536G2-82281	*	DECAL,FUEL-CAPACITY デカル	1	[EXB/CHINESE]
-	239T9-12071	*	DECAL,FUEL-CAPACITY デカル	1	[EXB/RUSSIAN]
11	51232-82001	*	DECAL,GASOLINE デカル	1	A [EXB/ENGLISH]
-	509K3-82681	*	DECAL,LIGHT-OIL デカル	1	B [EXB/ENGLISH]
-	51232-82021	*	DECAL,GASOLINE デカル	1	A [EXB/SPANISH]
-	509K3-82811	*	DECAL,LIGHT-OIL デカル	1	B [EXB/SPANISH]
-	51232-82011	*	DECAL,GASOLINE デカル	1	A [EXB/FRENCH]
-	509K3-82821	*	DECAL,LIGHT-OIL デカル	1	B [EXB/FRENCH]
-	51232-82032	*	DECAL,GASOLINE デカル	1	A [EXB/CHINESE]
-	539A2-82051	*	DECAL,LIGHT-OIL デカル	1	B [EXB/CHINESE]
-	536G2-82021	*	DECAL,GASOLINE デカル	1	A [EXB/RUSSIAN]
-	225R9-12001	*	DECAL,LIGHT-OIL デカル	1	B [EXB/RUSSIAN]
12	53652-82551	*	DECAL,CAUTION デカル	1	[EXB/CHINESE]
13	225R9-12091	+*	DECAL,BATTERY-SWITCH デカル	1	[EXB/RUSSIAN]
14	225R9-12081	+*	DECAL,PAN-HEATER-OIL デカル	1	[EXB/RUSSIAN]
15	53652-82401	*	DECAL,OIL デカル	1	[EXB/SPANISH]
-	53652-82011	*	DECAL,OIL デカル	1	[EXB/FRENCH]
-	53652-82541	*	DECAL,OIL デカル	1	[EXB/CHINESE]
-	225R9-12071	*	DECAL,HYDRAULIC-OIL デカル	1	[EXB/RUSSIAN]
16	571A3-82361	*	DECAL,CAUTION デカル	1	[EXB]
17	516G3-82801	*	DECAL,CAUTION デカル	1	[EXB/ENGLISH]
-	516G3-82821	*	DECAL,CAUTION デカル	1	[EXB/SPANISH]

FIG.190 DECAL (2/2)[EXB]

(F70391B0) ﾃﾞｶﾙ(2/2)

KIT

K1	K2	K3	K4	K5
901	902	903	904	905

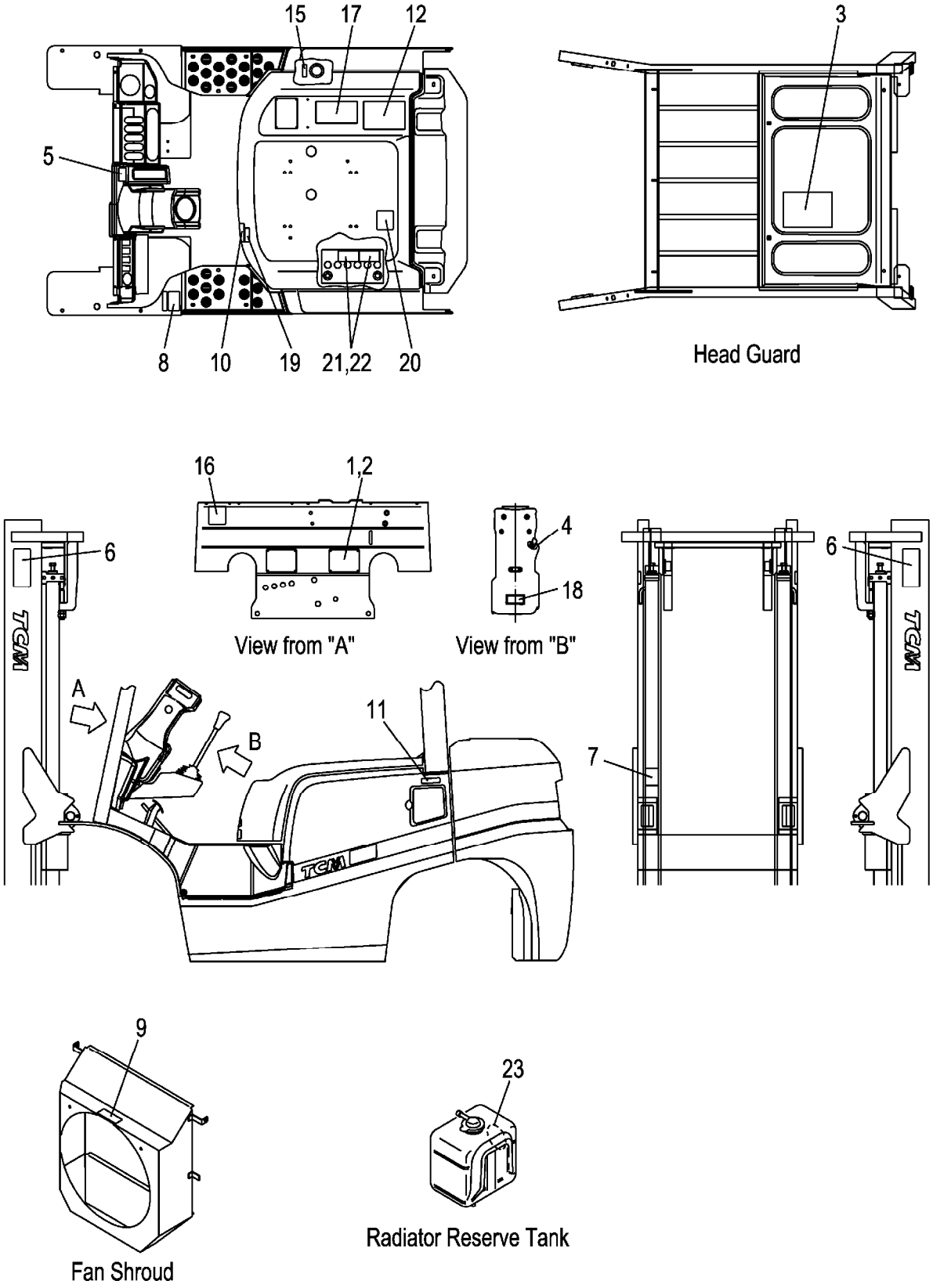

A:FG30C3 FG30T3
B:FD30C3 FD30T3

Item No	Part No.	Mark	Description	Req'd	Remarks : Serial No.
-	516G3-82831	*	DECAL,CAUTION デカル	1	[EXB/FRENCH]
-	52672-82073	*	DECAL,WARNING-PLATE デカル	1	[EXB/CHINESE]
-	225R9-12052	*	DECAL,CAUTION デカル	1	[EXB/RUSSIAN]
18	509K2-82251	*	DECAL,STEERING-HOSE デカル	1	[EXB/ENGLISH]
-	509K3-83011	*	DECAL,STEERING-HOSE デカル	1	[EXB/SPANISH]
-	509K3-83021	*	DECAL,STEERING-HOSE デカル	1	[EXB/FRENCH]
-	509K3-83451	*	DECAL,STEERING-HOSE デカル	1	[EXB/CHINESE]
-	509K3-83461	*	DECAL,STEERING-HOSE デカル	1	[EXB/RUSSIAN]
19	52N52-72201	*	DECAL,BONNET-CAUTION デカル	1	[EXB/ENGLISH]
-	52N53-82301	*	DECAL,BONNET-CAUTION デカル	1	[EXB/SPANISH]
-	52N53-82311	*	DECAL,BONNET-CAUTION デカル	1	[EXB/FRENCH]
-	52N52-82501	*	DECAL,BONNET-CAUTION デカル	1	[EXB/CHINESE]
-	52N52-82511	*	DECAL,BONNET-CAUTION デカル	1	[EXB/RUSSIAN]
20	577H3-82151	*	DECAL,GAS-SPRING デカル	1	[EXB/ENGLISH]
-	577H3-82171	*	DECAL,GAS-SPRING デカル	1	[EXB/SPANISH]
-	577H3-82181	*	DECAL,GAS-SPRING デカル	1	[EXB/FRENCH]
-	577H2-82021	*	DECAL,GAS-SPRING デカル	1	[EXB/CHINESE]
-	577H3-82741	*	DECAL,GAS-SPRING デカル	1	[EXB/RUSSIAN]
21	534A3-82311	*	DECAL,BATTERY,A デカル	1	[EXB/ENGLISH]
-	534A3-82331	*	DECAL,BATTERY,A デカル	1	[EXB/SPANISH]
-	534A3-82341	*	DECAL,BATTERY,A デカル	1	[EXB/FRENCH]
-	534A3-82531	*	DECAL,BATTERY デカル	1	[EXB/CHINESE]
-	232W9-12101	*	DECAL,BATTERY,A デカル	1	[EXB/RUSSIAN]
22	534A3-82421	*	DECAL,BATTERY,B デカル	1	[EXB/ENGLISH]
-	534A3-82441	*	DECAL,BATTERY,B デカル	1	[EXB/SPANISH]
-	534A3-82451	*	DECAL,BATTERY,B デカル	1	[EXB/FRENCH]
-	232W9-12111	*	DECAL,BATTERY,B デカル	1	[EXB/RUSSIAN]
23	23659-12101	*	DECAL,LIFE-COOLANT デカル	1	[EXB]
-	522A3-82641	*	DECAL,LIFE-COOLANT デカル	1	[EXB/SPANISH]
-	522A3-82841	*	DECAL,LIFE-COOLANT デカル	1	[EXB/FRENCH]
-	232W9-12051	*	DECAL,LIFE-COOLANT デカル	1	[EXB/RUSSIAN]

FIG.191 DECAL (2/2)[EXC]

(F70391C0) ﾃﾞｶﾙ(2/2)

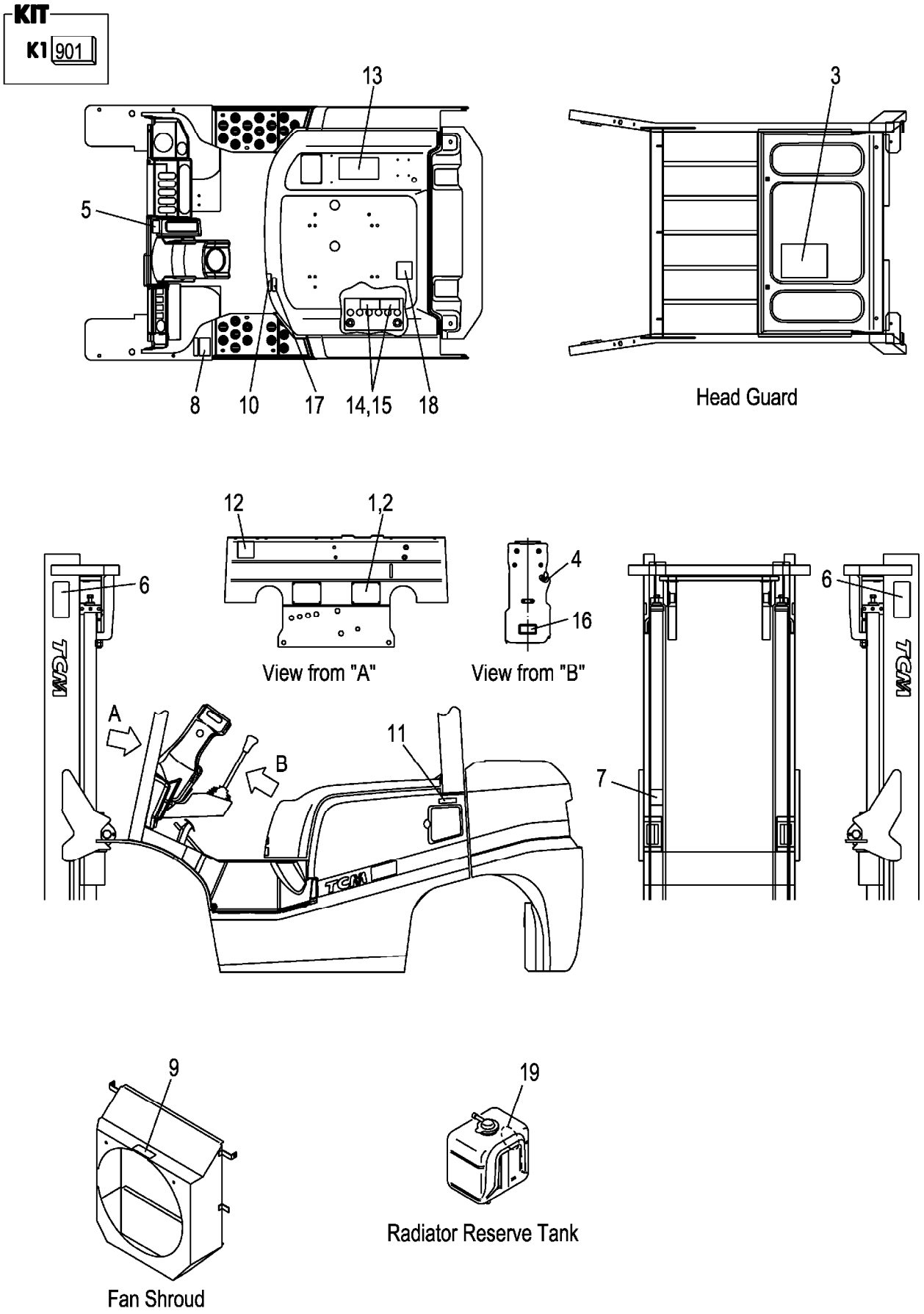

A:FG30C3 FG30T3
B:FD30C3 FD30T3

Item No	Part No.	Mark	Description		Req'd	Remarks : Serial No.
901	C-11452-2B0-E	K1	KIT,DECAL,ENGLISH	ﾃﾞｶﾙｷｯﾄ	1	A
						[EXC] INC.3-19,FIG.188:8,9
-	C-11452-2N0-E	K1	KIT,DECAL,ENGLISH	ﾃﾞｶﾙｷｯﾄ	1	B
						[EXC] INC.3-19,FIG.188:8,9
1	NO PART NO.	#	PLATE,NAME	ﾌﾟﾚｰﾄ	1	[EXC]
2	216G9-12131		RIVET	ﾘﾍﾞｯﾄ	4	[EXC]
3	52N52-72101	*	CHART,LUBRICATION	ﾁｬｰﾄ	1	[EXC]
4	216G9-12071	*	DECAL,STARTER-SWITCH	ﾃﾞｶﾙ	1	[EXC]
5	514A3-82002	*	DECAL,BRAKE-LEVER	ﾃﾞｶﾙ	1	[EXC]
6	27419-12061	*	DECAL,MAST-CAUTION	ﾃﾞｶﾙ	2	[EXC]
7	27419-12071	*	DECAL,CROSS-BEAM	ﾃﾞｶﾙ	1	[EXC]
8	516G2-72711	*	DECAL,TIRE-CAUTION	ﾃﾞｶﾙ	1	[EXC]
9	516G2-72701	*	DECAL,FAN-CAUTION	ﾃﾞｶﾙ	1	[EXC]
10	536G2-82181	*	DECAL,FUEL-CAPACITY	ﾃﾞｶﾙ	1	[EXC]
11	51232-82001	*	DECAL,GASOLINE	ﾃﾞｶﾙ	1	A
						[EXC]
-	509K3-82681	*	DECAL,LIGHT-OIL	ﾃﾞｶﾙ	1	B
						[EXC]
12	571A3-82361	*	DECAL,CAUTION	ﾃﾞｶﾙ	1	[EXC]
13	516G3-82801	*	DECAL,CAUTION	ﾃﾞｶﾙ	1	[EXC]
14	534A3-82311	*	DECAL,BATTERY,A	ﾃﾞｶﾙ	1	[EXC]
15	534A3-82421	*	DECAL,BATTERY,B	ﾃﾞｶﾙ	1	[EXC]
16	509K2-82251	*	DECAL,STEERING-HOSE	ﾃﾞｶﾙ	1	[EXC]
17	52N52-72201	*	DECAL,BONNET-CAUTION	ﾃﾞｶﾙ	1	[EXC]
18	577H3-82151	*	DECAL,GAS-SPRING	ﾃﾞｶﾙ	1	[EXC]
19	23659-12101	*	DECAL,LIFE-COOLANT	ﾃﾞｶﾙ	1	[EXC]

FIG.192 DECAL (2/2)[EXE]

(F70391E0) ﾃﾞｶﾙ(2/2)

KIT

K1	K2
901	902

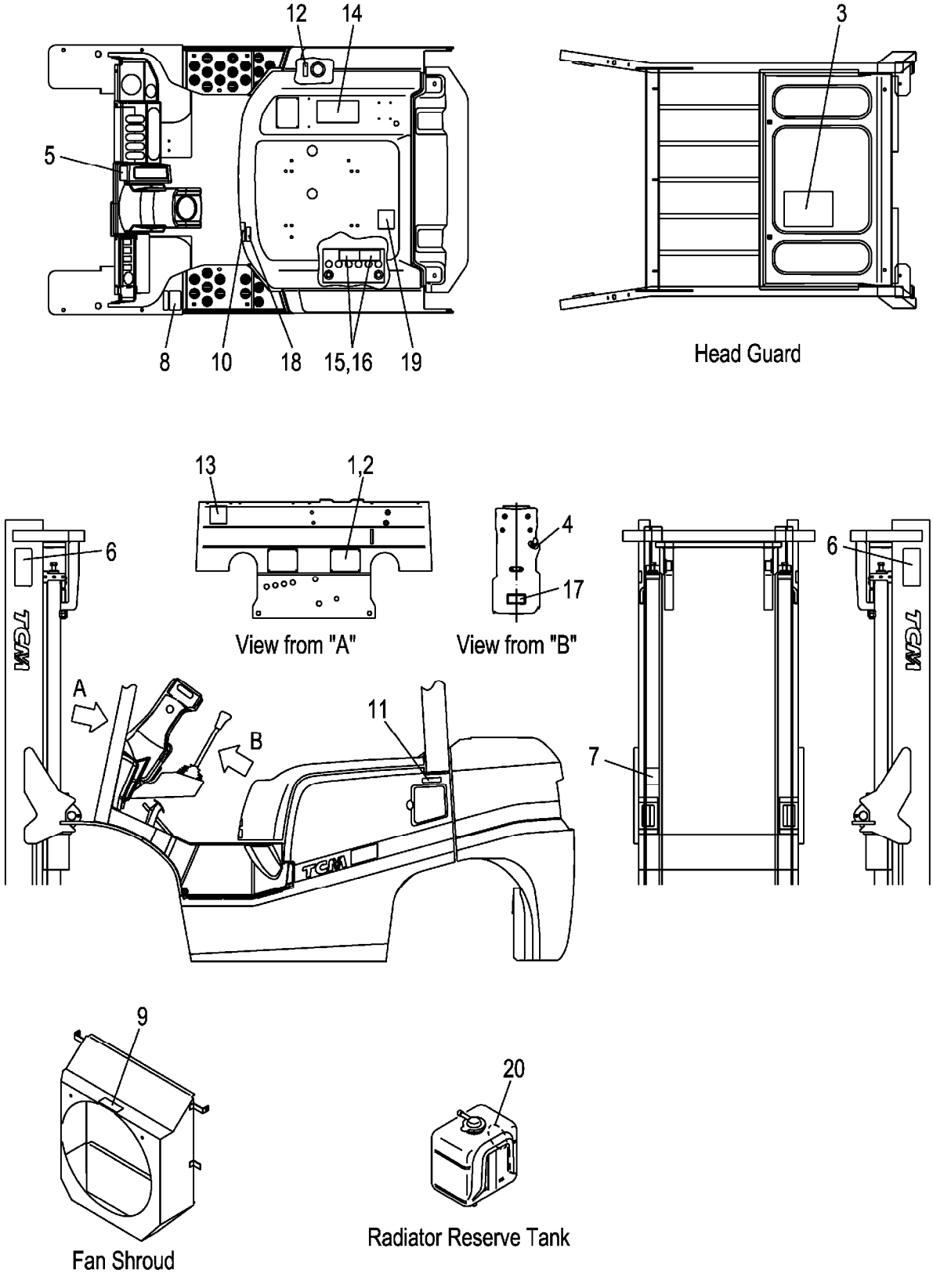

A:FG30C3 FG30T3
B:FD30C3 FD30T3

Item No	Part No.	Mark	Description	Req'd	Remarks : Serial No.
901	C-11452-2B0-E	K1	KIT,DECAL,ENGLISH デカルキット	1	A [EXE/ENGLISH] INC.3-11,13-20,FIG.188:8,9
-	C-11452-2N0-E	K1	KIT,DECAL,ENGLISH デカルキット	1	B [EXE/ENGLISH] INC.3-11,13-20,FIG.188:8,9
902	C-11452-2B0-S	K2	KIT,DECAL,SPANISH デカルキット	1	A [EXE/SPANISH] INC.3-20,FIG.188:8,9
-	C-11452-2N0-S	K2	KIT,DECAL,SPANISH デカルキット	1	B [EXE/SPANISH] INC.3-20,FIG.188:8,9
-	C-11452-2B0-BF	K2	KIT,DECAL,FRENCH デカルキット	1	A [EXE/FRENCH] INC.3-20,FIG.188:8,9
-	C-11452-2N0-BF	K2	KIT,DECAL,FRENCH デカルキット	1	B [EXE/FRENCH] INC.3-20,FIG.188:8,9
-	C-11452-2B0-G	K2	KIT,DECAL,GERMAN デカルキット	1	A [EXE/GERMAN] INC.3-20,FIG.188:8,9
-	C-11452-2N0-G	K2	KIT,DECAL,GERMAN デカルキット	1	B [EXE/GERMAN] INC.3-20,FIG.188:8,9
-	C-11452-2B0-O	K2	KIT,DECAL,DUTCH デカルキット	1	A [EXE/DUTCH] INC.3-20,FIG.188:8,9
-	C-11452-2N0-O	K2	KIT,DECAL,DUTCH デカルキット	1	B [EXE/DUTCH] INC.3-20,FIG.188:8,9
-	C-11452-2B0-DN	K2	KIT,DECAL,DANISH デカルキット	1	A [EXE/DANISH] INC.3-20,FIG.188:8,9
-	C-11452-2N0-DN	K2	KIT,DECAL,DANISH デカルキット	1	B [EXE/DANISH] INC.3-20,FIG.188:8,9
-	C-11452-2B0-I	K2	KIT,DECAL,ITALIAN デカルキット	1	A [EXE/ITALIAN] INC.3-20,FIG.188:8,9
-	C-11452-2N0-I	K2	KIT,DECAL,ITALIAN デカルキット	1	B [EXE/ITALIAN] INC.3-20,FIG.188:8,9
-	C-11452-2B0-GR	K2	KIT,DECAL,GREEK デカルキット	1	A [EXE/GREEK] INC.3-20,FIG.188:8,9
-	C-11452-2N0-GR	K2	KIT,DECAL,GREEK デカルキット	1	B [EXE/GREEK] INC.3-20,FIG.188:8,9

FIG.192 DECAL (2/2)[EXE]

(F70391E0) ﾃﾞｶﾙ(2/2)

KIT

K1	K2
901	902

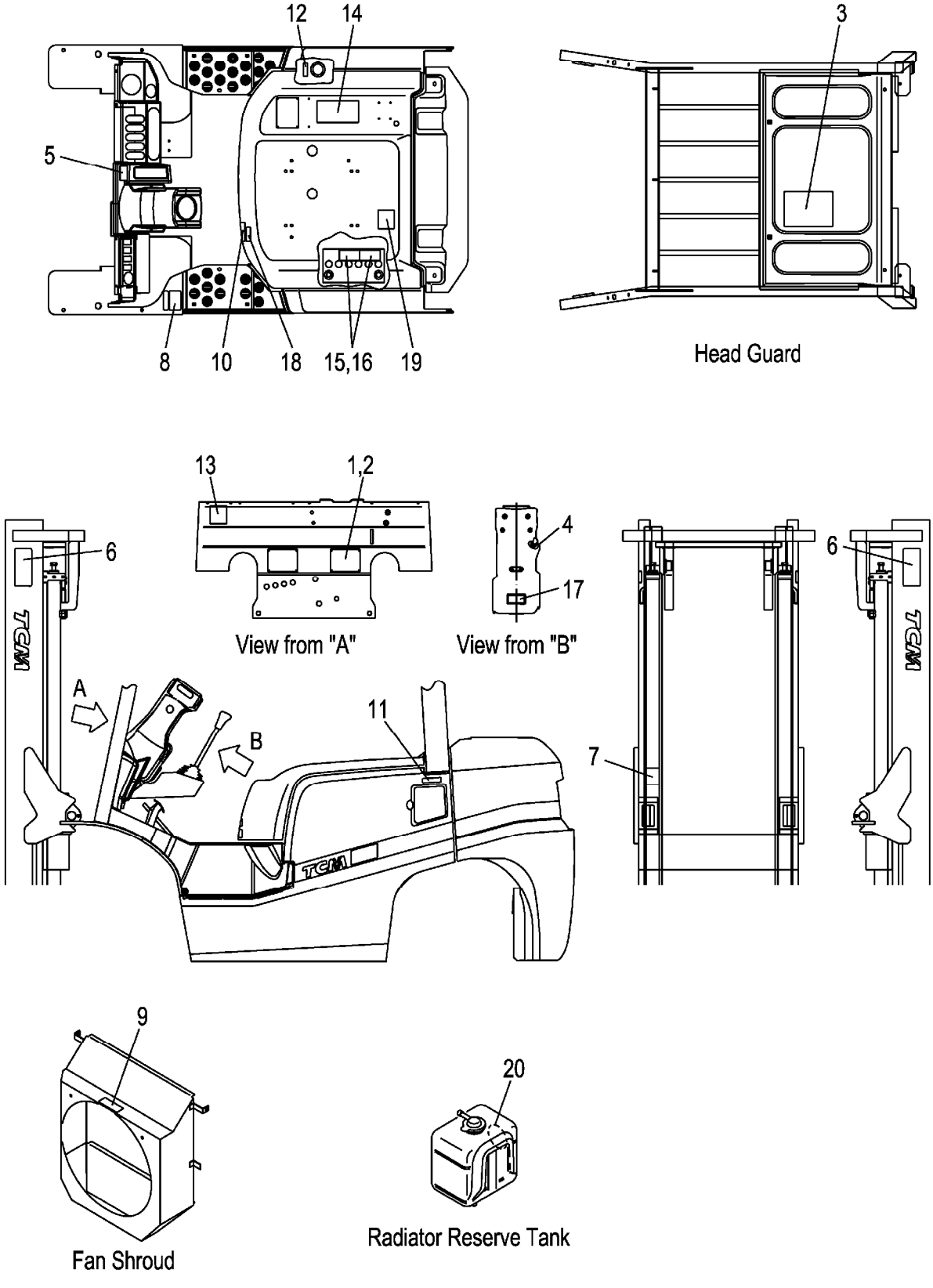

A:FG30C3 FG30T3
B:FD30C3 FD30T3

Item No	Part No.	Mark	Description	Req'd	Remarks : Serial No.
-	C-11452-2B0-P	K2	KIT,DECAL,PORTUGUESE デカルキット	1	A [EXE/PORTUGUESE] INC.3-20,FIG.188:8,9
-	C-11452-2N0-P	K2	KIT,DECAL,PORTUGUESE デカルキット	1	B [EXE/PORTUGUESE] INC.3-20,FIG.188:8,9
-	C-11452-2B0-NR	K2	KIT,DECAL,NORWEGIAN デカルキット	1	A [EXE/NORWEGIAN] INC.3-20,FIG.188:8,9
-	C-11452-2N0-NR	K2	KIT,DECAL,NORWEGIAN デカルキット	1	B [EXE/NORWEGIAN] INC.3-20,FIG.188:8,9
-	C-11452-2B0-PL	K2	KIT,DECAL,POLISH デカルキット	1	A [EXE/POLISH] INC.3-20,FIG.188:8,9
-	C-11452-2N0-PL	K2	KIT,DECAL,POLISH デカルキット	1	B [EXE/POLISH] INC.3-20,FIG.188:8,9
-	C-11452-2B0-H	K2	KIT,DECAL,HUNGARIAN デカルキット	1	A [EXE/HUNGARIAN] INC.3-20,FIG.188:8,9
-	C-11452-2N0-H	K2	KIT,DECAL,HUNGARIAN デカルキット	1	B [EXE/HUNGARIAN] INC.3-20,FIG.188:8,9
-	C-11452-2B0-CZ	K2	KIT,DECAL,CZECH デカルキット	1	A [EXE/CZECH] INC.3-20,FIG.188:8,9
-	C-11452-2N0-CZ	K2	KIT,DECAL,CZECH デカルキット	1	B [EXE/CZECH] INC.3-20,FIG.188:8,9
-	C-11452-2B0-TR	K2	KIT,DECAL, デカルキット	1	A [EXE/TURKISH] INC.3-20,FIG.188:8,9
-	C-11452-2N0-TR	K2	KIT,DECAL, デカルキット	1	B [EXE/TURKISH] INC.3-20,FIG.188:8,9
1	NO PART NO.	#	PLATE,NAME プレート	1	[EXE/ENGLISH]
-	NO PART NO.	#	PLATE,NAME プレート	1	[EXE/SPANISH]
-	NO PART NO.	#	PLATE,NAME プレート	1	[EXE/FRENCH]
-	NO PART NO.	#	PLATE,NAME プレート	1	[EXE/GERMAN]
-	NO PART NO.	#	PLATE,NAME プレート	1	[EXE/DUTCH]
-	NO PART NO.	#	PLATE,NAME プレート	1	[EXE/DANISH]
-	NO PART NO.	#	PLATE,NAME プレート	1	[EXE/ITALIAN]
-	NO PART NO.	#	PLATE,NAME プレート	1	[EXE/GREEK]
-	NO PART NO.	#	PLATE,NAME プレート	1	[EXE/PORTUGUESE]
-	NO PART NO.	#	PLATE,NAME プレート	1	[EXE/NORWEGIAN]
-	NO PART NO.	#	PLATE,NAME プレート	1	[EXE/POLISH]
-	NO PART NO.	#	PLATE,NAME プレート	1	[EXE/HUNGARIAN]
-	NO PART NO.	#	PLATE,NAME プレート	1	[EXE/CZECH]
-	NO PART NO.	#	PLATE,NAME プレート	1	[EXE/TURKISH]

FIG.192 DECAL (2/2)[EXE]

(F70391E0) ﾃﾞｶﾙ(2/2)

KIT

K1	K2
901	902

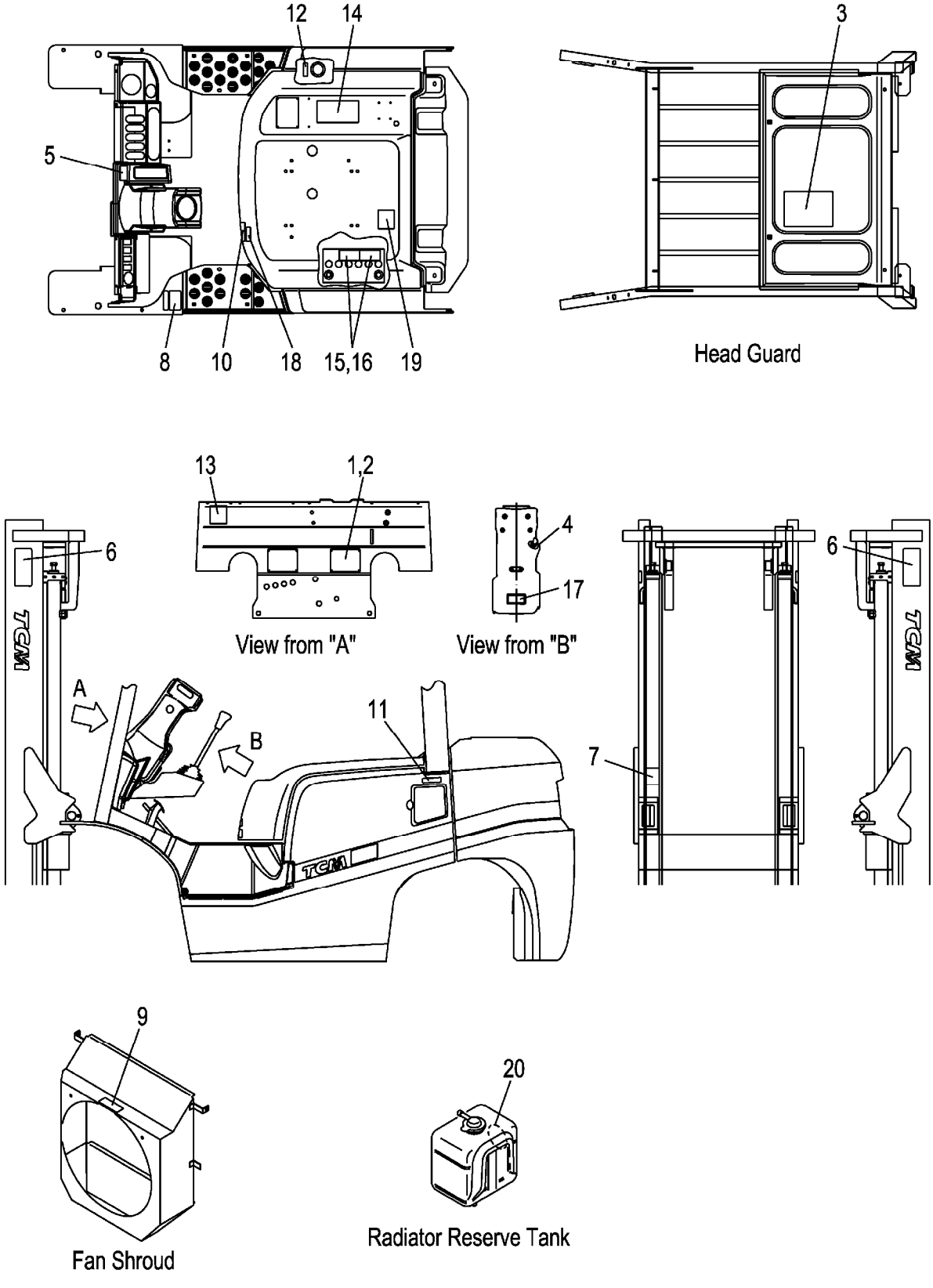

A:FG30C3 FG30T3
B:FD30C3 FD30T3

Item No	Part No.	Mark	Description		Req'd	Remarks : Serial No.
2	216G9-12131		RIVET	ﾘﾍﾞｯﾄ	4	[EXE]
3	52N52-72101	*	CHART,LUBRICATION	ﾁｬｰﾄ	1	[EXE/ENGLISH]
-	52N53-82101	*	CHART,LUBRICATION	ﾁｬｰﾄ	1	[EXE/SPANISH]
-	52N53-82111	*	CHART,LUBRICATION	ﾁｬｰﾄ	1	[EXE/FRENCH]
-	52N53-82121	*	CHART,LUBRICATION	ﾁｬｰﾄ	1	[EXE/GERMAN]
-	52N53-82131	*	CHART,LUBRICATION	ﾁｬｰﾄ	1	[EXE/DUTCH]
-	52N53-82141	*	CHART,LUBRICATION	ﾁｬｰﾄ	1	[EXE/DANISH]
-	52N53-82151	*	CHART,LUBRICATION	ﾁｬｰﾄ	1	[EXE/ITALIAN]
-	52N53-82161	*	CHART,LUBRICATION	ﾁｬｰﾄ	1	[EXE/GREEK]
-	52N53-82171	*	CHART,LUBRICATION	ﾁｬｰﾄ	1	[EXE/PORTUGUESE]
-	52N53-82201	*	CHART,LUBRICATION	ﾁｬｰﾄ	1	[EXE/NORWEGIAN]
-	52N53-82211	*	CHART,LUBRICATION	ﾁｬｰﾄ	1	[EXE/POLISH]
-	52N53-82221	*	CHART,LUBRICATION	ﾁｬｰﾄ	1	[EXE/HUNGARIAN]
-	52N53-82231	*	CHART,LUBRICATION	ﾁｬｰﾄ	1	[EXE/CZECH]
-	52N53-82241	*	CHART,LUBRICATION	ﾁｬｰﾄ	1	[EXE/TURKISH]
4	216G9-12071	*	DECAL,STARTER-SWITCH	ﾃﾞｶﾙ	1	[EXE]
-	516G3-82011	*	DECAL,STARTER-SWITCH	ﾃﾞｶﾙ	1	[EXE/SPANISH]
-	516G3-82001	*	DECAL,STARTER-SWITCH	ﾃﾞｶﾙ	1	[EXE/GERMAN]
-	516G3-82021	*	DECAL,STARTER-SWITCH	ﾃﾞｶﾙ	1	[EXE/DUTCH]
-	516G3-82031	*	DECAL,STARTER-SWITCH	ﾃﾞｶﾙ	1	[EXE/DANISH]
-	516G3-82041	*	DECAL,STARTER-SWITCH	ﾃﾞｶﾙ	1	[EXE/ITALIAN]
-	516G3-82051	*	DECAL,STARTER-SWITCH	ﾃﾞｶﾙ	1	[EXE/GREEK]
-	516G3-82081	*	DECAL,STARTER-SWITCH	ﾃﾞｶﾙ	1	[EXE/NORWEGIAN]
-	516G3-82561	*	DECAL,STARTER-SWITCH	ﾃﾞｶﾙ	1	[EXE/POLISH]
-	516G3-82571	*	DECAL,STARTER-SWITCH	ﾃﾞｶﾙ	1	[EXE/HUNGARIAN]
-	516G3-82581	*	DECAL,STARTER-SWITCH	ﾃﾞｶﾙ	1	[EXE/CZECH]
-	516G3-82591	*	DECAL,STARTER-SWITCH	ﾃﾞｶﾙ	1	[EXE/TURKISH]
5	514A3-82002	*	DECAL,BRAKE-LEVER	ﾃﾞｶﾙ	1	[EXE/ENGLISH]
-	514A3-82012	*	DECAL,BRAKE-LEVER	ﾃﾞｶﾙ	1	[EXE/SPANISH]
-	514A3-82022	*	DECAL,BRAKE-LEVER	ﾃﾞｶﾙ	1	[EXE/FRENCH]
-	514A3-02002	*	DECAL,BRAKE-LEVER	ﾃﾞｶﾙ	1	[EXE/GERMAN]
-	514A3-82032	*	DECAL,BRAKE-LEVER	ﾃﾞｶﾙ	1	[EXE/DUTCH]
-	514A3-82042	*	DECAL,BRAKE-LEVER	ﾃﾞｶﾙ	1	[EXE/DANISH]
-	514A3-82052	*	DECAL,BRAKE-LEVER	ﾃﾞｶﾙ	1	[EXE/ITALIAN]
-	514A3-82062	*	DECAL,BRAKE-LEVER	ﾃﾞｶﾙ	1	[EXE/GREEK]
-	514A3-82072	*	DECAL,BRAKE-LEVER	ﾃﾞｶﾙ	1	[EXE/PORTUGUESE]
-	514A3-82081	*	DECAL,BRAKE-LEVER	ﾃﾞｶﾙ	1	[EXE/NORWEGIAN]
-	514A3-82651	*	DECAL,BRAKE-LEVER	ﾃﾞｶﾙ	1	[EXE/POLISH]
-	514A3-82661	*	DECAL,BRAKE-LEVER	ﾃﾞｶﾙ	1	[EXE/HUNGARIAN]
-	514A3-82671	*	DECAL,BRAKE-LEVER	ﾃﾞｶﾙ	1	[EXE/CZECH]
-	514A3-82681	*	DECAL,BRAKE-LEVER	ﾃﾞｶﾙ	1	[EXE/TURKISH]
6	27419-12061	*	DECAL,MAST-CAUTION	ﾃﾞｶﾙ	2	[EXE]
7	27419-12071	*	DECAL,CROSS-BEAM	ﾃﾞｶﾙ	1	[EXE]
8	516G2-72711	*	DECAL,TIRE-CAUTION	ﾃﾞｶﾙ	1	[EXE/ENGLISH]
-	516G3-82211	*	DECAL,TIRE-CAUTION	ﾃﾞｶﾙ	1	[EXE/SPANISH]
-	516G3-82221	*	DECAL,TIRE-CAUTION	ﾃﾞｶﾙ	1	[EXE/FRENCH]
-	516G3-82201	*	DECAL,TIRE-CAUTION	ﾃﾞｶﾙ	1	[EXE/GERMAN]
-	516G3-82232	*	DECAL,TIRE-CAUTION	ﾃﾞｶﾙ	1	[EXE/DUTCH]
-	516G3-82241	*	DECAL,TIRE-CAUTION	ﾃﾞｶﾙ	1	[EXE/DANISH]
-	516G3-82251	*	DECAL,TIRE-CAUTION	ﾃﾞｶﾙ	1	[EXE/ITALIAN]

FIG.192 DECAL (2/2)[EXE]

(F70391E0) ﾃﾞｶﾙ(2/2)

KIT

K1	K2
901	902

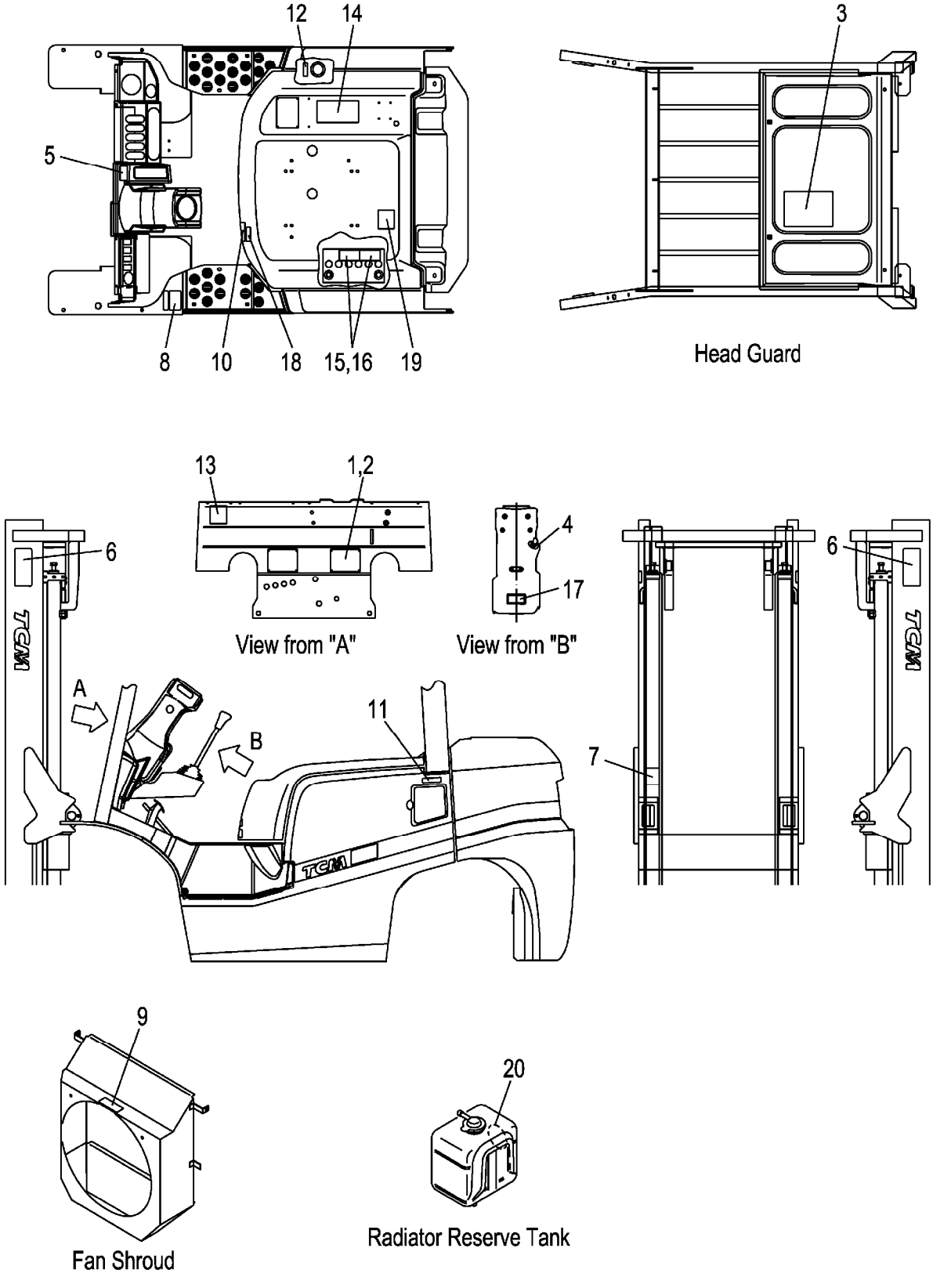

A:FG30C3 FG30T3
B:FD30C3 FD30T3

Item No	Part No.	Mark	Description	Req'd	Remarks : Serial No.
-	516G3-82261	*	DECAL,TIRE-CAUTION デカル	1	[EXE/GREEK]
-	516G3-82271	*	DECAL,TIRE-CAUTION デカル	1	[EXE/PORTUGUESE]
-	516G3-82551	*	DECAL,TIRE-CAUTION デカル	1	[EXE/NORWEGIAN]
-	516G3-83701	*	DECAL,TIRE-CAUTION デカル	1	[EXE/POLISH]
-	516G3-83711	*	DECAL,TIRE-CAUTION デカル	1	[EXE/HUNGARIAN]
-	516G3-83721	*	DECAL,TIRE-CAUTION デカル	1	[EXE/CZECH]
-	516G3-83731	*	DECAL,TIRE-CAUTION デカル	1	[EXE/TURKISH]
9	516G2-72701	*	DECAL,FAN-CAUTION デカル	1	[EXE/ENGLISH]
-	516G3-82111	*	DECAL,FAN-CAUTION デカル	1	[EXE/SPANISH]
-	516G3-82121	*	DECAL,FAN-CAUTION デカル	1	[EXE/FRENCH]
-	516G3-82101	*	DECAL,FAN-CAUTION デカル	1	[EXE/GERMAN]
-	516G3-82131	*	DECAL,FAN-CAUTION デカル	1	[EXE/DUTCH]
-	516G3-82141	*	DECAL,FAN-CAUTION デカル	1	[EXE/DANISH]
-	516G3-82151	*	DECAL,FAN-CAUTION デカル	1	[EXE/ITALIAN]
-	516G3-82161	*	DECAL,FAN-CAUTION デカル	1	[EXE/GREEK]
-	516G3-82171	*	DECAL,FAN-CAUTION デカル	1	[EXE/PORTUGUESE]
-	516G3-82091	*	DECAL,FAN-CAUTION デカル	1	[EXE/NORWEGIAN]
-	516G3-83601	*	DECAL,FAN-CAUTION デカル	1	[EXE/POLISH]
-	516G3-83611	*	DECAL,FAN-CAUTION デカル	1	[EXE/HUNGARIAN]
-	516G3-83621	*	DECAL,FAN-CAUTION デカル	1	[EXE/CZECH]
-	516G3-83631	*	DECAL,FAN-CAUTION デカル	1	[EXE/TURKISH]
10	536G2-82181	*	DECAL,FUEL-CAPACITY デカル	1	[EXE/ENGLISH]
-	536G3-82001	*	DECAL,FUEL-CAPACITY デカル	1	[EXE/SPANISH]
-	536G3-82011	*	DECAL,FUEL-CAPACITY デカル	1	[EXE/FRENCH]
-	536G3-82021	*	DECAL,FUEL-CAPACITY デカル	1	[EXE/GERMAN]
-	536G3-82031	*	DECAL,FUEL-CAPACITY デカル	1	[EXE/DUTCH]
-	536G3-82041	*	DECAL,FUEL-CAPACITY デカル	1	[EXE/DANISH]
-	536G3-82051	*	DECAL,FUEL-CAPACITY デカル	1	[EXE/ITALIAN]
-	536G3-82061	*	DECAL,FUEL-CAPACITY デカル	1	[EXE/GREEK]
-	536G3-82071	*	DECAL,FUEL-CAPACITY デカル	1	[EXE/PORTUGUESE]
-	536G3-82101	*	DECAL,FUEL-CAPACITY デカル	1	[EXE/NORWEGIAN]
-	536G3-82111	*	DECAL,FUEL-CAPACITY デカル	1	[EXE/POLISH]
-	536G3-82121	*	DECAL,FUEL-CAPACITY デカル	1	[EXE/HUNGARIAN]
-	536G3-82131	*	DECAL,FUEL-CAPACITY デカル	1	[EXE/CZECH]
-	536G3-82141	*	DECAL,FUEL-CAPACITY デカル	1	[EXE/TURKISH]
11	51232-82001	*	DECAL,GASOLINE デカル	1	A [EXE/ENGLISH]
-	509K3-82681	*	DECAL,LIGHT-OIL デカル	1	B [EXE/ENGLISH]
-	51232-82021	*	DECAL,GASOLINE デカル	1	A [EXE/SPANISH]
-	509K3-82811	*	DECAL,LIGHT-OIL デカル	1	B [EXE/SPANISH]
-	51232-82011	*	DECAL,GASOLINE デカル	1	A [EXE/FRENCH]
-	509K3-82821	*	DECAL,LIGHT-OIL デカル	1	B [EXE/FRENCH]
-	51233-02011	*	DECAL,GASOLINE デカル	1	A [EXE/GERMAN]

FIG.192 DECAL (2/2)[EXE]

(F70391E0) ﾃﾞｶﾙ(2/2)

KIT

K1	K2
901	902

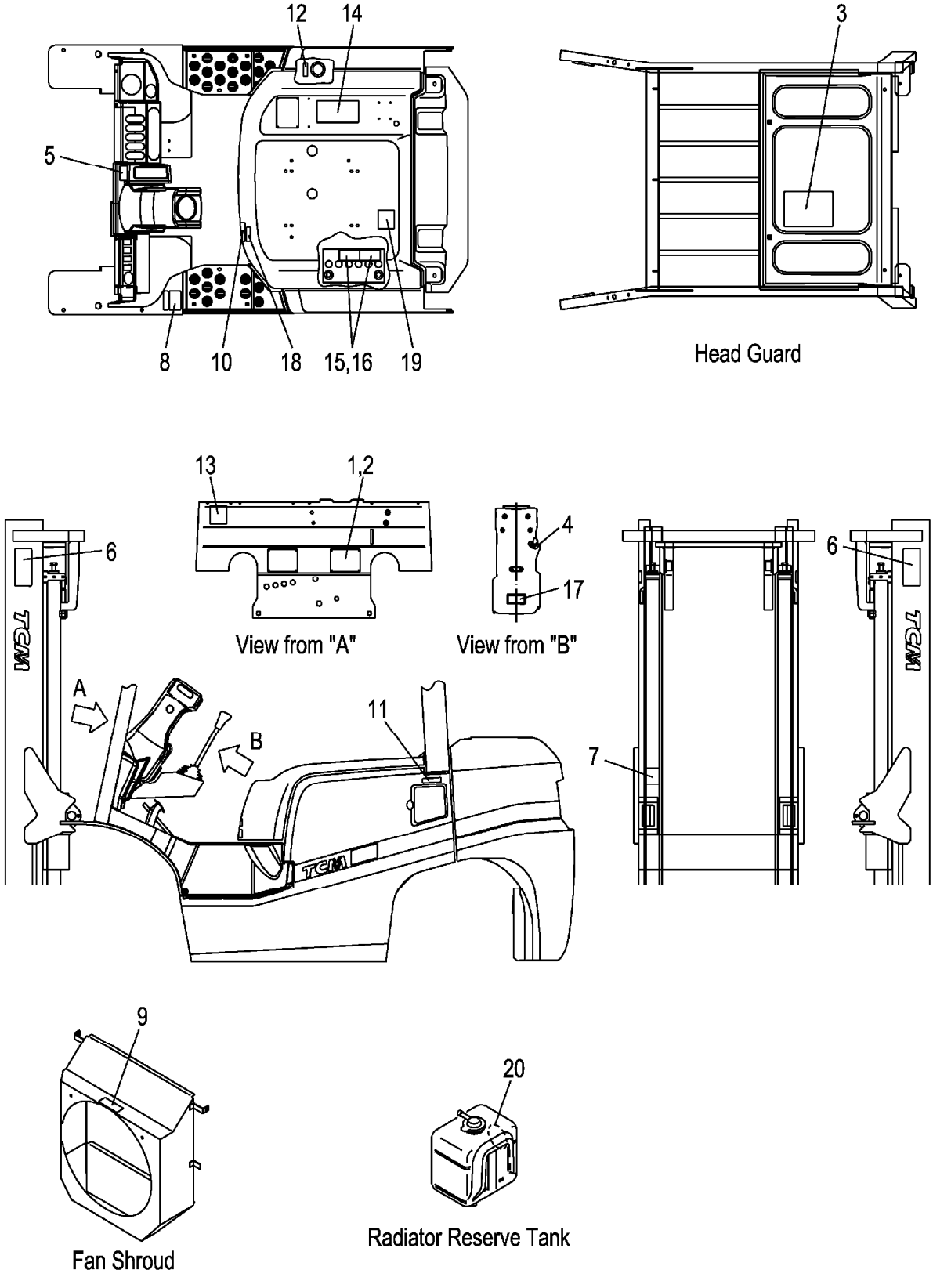

A:FG30C3 FG30T3
B:FD30C3 FD30T3

Item No	Part No.	Mark	Description	Req'd	Remarks : Serial No.
-	509K3-82801	*	DECAL,LIGHT-OIL デカル	1	B [EXE/GERMAN]
-	51233-83021	*	DECAL,GASOLINE デカル	1	A [EXE/DUTCH]
-	509K3-82831	*	DECAL,LIGHT-OIL デカル	1	B [EXE/DUTCH]
-	51233-83221	*	DECAL,GASOLINE デカル	1	A [EXE/DANISH]
-	509K3-82841	*	DECAL,LIGHT-OIL デカル	1	B [EXE/DANISH]
-	51233-83421	*	DECAL,GASOLINE デカル	1	A [EXE/ITALIAN]
-	509K3-82851	*	DECAL,LIGHT-OIL デカル	1	B [EXE/ITALIAN]
-	51233-83621	*	DECAL,GASOLINE デカル	1	A [EXE/GREEK]
-	509K3-82861	*	DECAL,LIGHT-OIL デカル	1	B [EXE/GREEK]
-	51233-83821	*	DECAL,GASOLINE デカル	1	A [EXE/PORTUGUESE]
-	509K3-82871	*	DECAL,LIGHT-OIL デカル	1	B [EXE/PORTUGUESE]
-	528F3-82041	*	DECAL,GASOLINE デカル	1	A [EXE/NORWEGIAN]
-	509K3-83301	*	DECAL,LIGHT-OIL デカル	1	B [EXE/NORWEGIAN]
-	528F3-82051	*	DECAL,GASOLINE デカル	1	A [EXE/POLISH]
-	509K3-83311	*	DECAL,LIGHT-OIL デカル	1	B [EXE/POLISH]
-	528F3-82061	*	DECAL,GASOLINE デカル	1	A [EXE/HUNGARIAN]
-	509K3-83321	*	DECAL,LIGHT-OIL デカル	1	B [EXE/HUNGARIAN]
-	528F3-82071	*	DECAL,GASOLINE デカル	1	A [EXE/CZECH]
-	509K3-83331	*	DECAL,LIGHT-OIL デカル	1	B [EXE/CZECH]
-	528F3-82081	*	DECAL,GASOLINE デカル	1	A [EXE/TURKISH]
-	509K3-83341	*	DECAL,LIGHT-OIL デカル	1	B [EXE/TURKISH]
12	53652-82401	*	DECAL,OIL デカル	1	[EXE/SPANISH]
-	53652-82011	*	DECAL,OIL デカル	1	[EXE/FRENCH]
-	51233-02021	*	DECAL,OIL デカル	1	[EXE/GERMAN]
-	522A3-83061	*	DECAL,OIL デカル	1	[EXE/DUTCH][EXE/DANISH]
-	522A3-83461	*	DECAL,OIL デカル	1	[EXE/ITALIAN]
-	522A3-83661	*	DECAL,OIL デカル	1	[EXE/GREEK]
-	522A3-83861	*	DECAL,OIL デカル	1	[EXE/PORTUGUESE]
-	529F3-82601	*	DECAL,OIL デカル	1	[EXE/NORWEGIAN]

FIG.192 DECAL (2/2)[EXE]

(F70391E0) ﾃﾞｶﾙ(2/2)

KIT

K1	K2
901	902

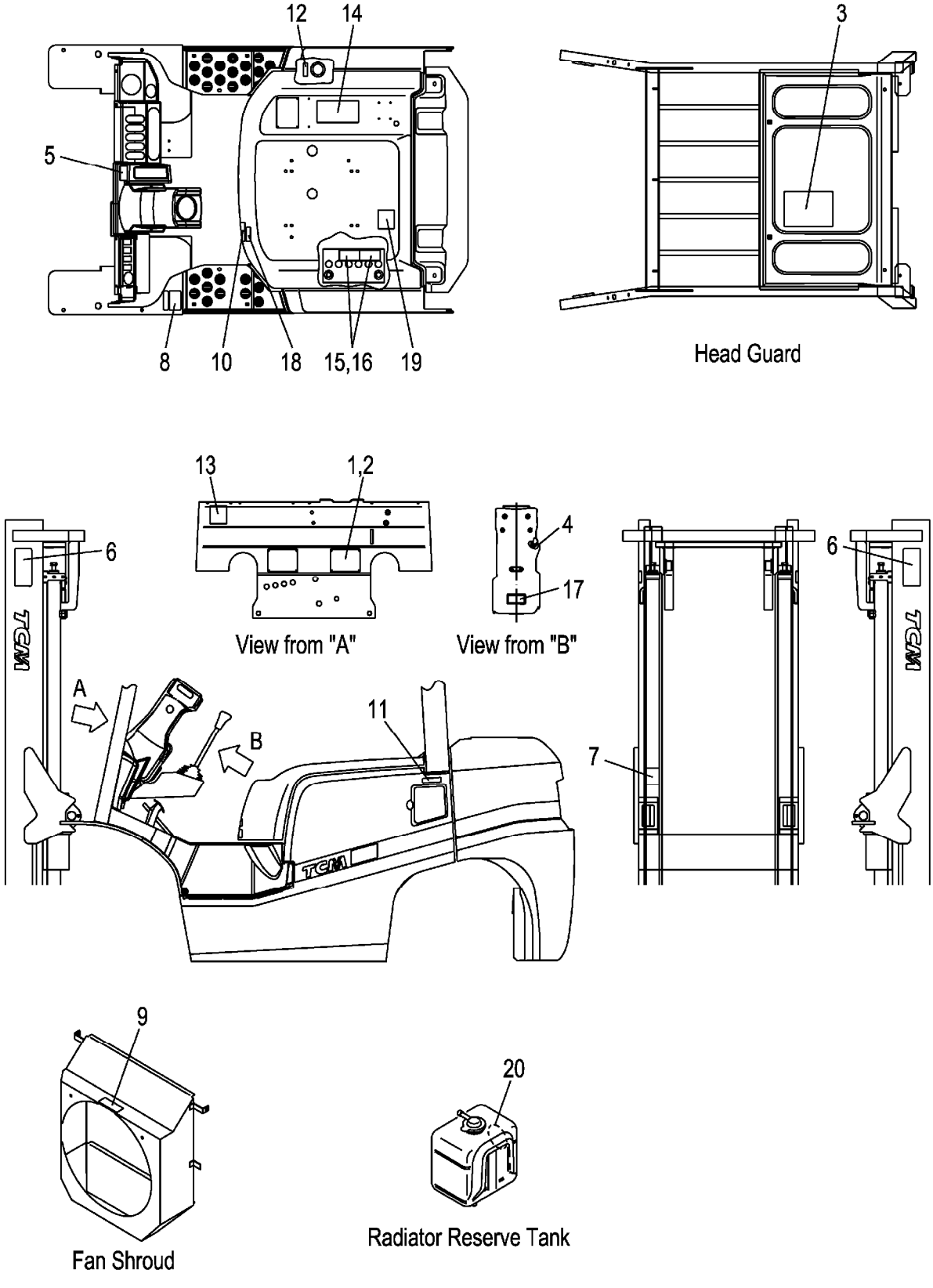

A:FG30C3 FG30T3
B:FD30C3 FD30T3

Item No	Part No.	Mark	Description	Req'd	Remarks : Serial No.
-	529F3-82611	*	DECAL,OIL デカル	1	[EXE/POLISH]
-	529F3-82621	*	DECAL,OIL デカル	1	[EXE/HUNGARIAN]
-	529F3-82631	*	DECAL,OIL デカル	1	[EXE/CZECH]
-	529F3-82641	*	DECAL,OIL デカル	1	[EXE/TURKISH]
13	571A3-82361	*	DECAL,CAUTION デカル	1	[EXE]
14	516G3-82801	*	DECAL,CAUTION デカル	1	[EXE/ENGLISH]
-	516G3-82821	*	DECAL,CAUTION デカル	1	[EXE/SPANISH]
-	516G3-82831	*	DECAL,CAUTION デカル	1	[EXE/FRENCH]
-	516G3-82811	*	DECAL,CAUTION デカル	1	[EXE/GERMAN]
-	516G3-82841	*	DECAL,CAUTION デカル	1	[EXE/DUTCH]
-	516G3-82851	*	DECAL,CAUTION デカル	1	[EXE/DANISH]
-	516G3-82861	*	DECAL,CAUTION デカル	1	[EXE/ITALIAN]
-	516G3-82871	*	DECAL,CAUTION デカル	1	[EXE/GREEK]
-	516G3-82881	*	DECAL,CAUTION デカル	1	[EXE/PORTUGUESE]
-	516G3-82911	*	DECAL,CAUTION デカル	1	[EXE/NORWEGIAN]
-	516G3-82921	*	DECAL,CAUTION デカル	1	[EXE/POLISH]
-	516G3-82931	*	DECAL,CAUTION デカル	1	[EXE/HUNGARIAN]
-	516G3-82941	*	DECAL,CAUTION デカル	1	[EXE/CZECH]
-	516G3-82951	*	DECAL,CAUTION デカル	1	[EXE/TURKISH]
15	534A3-82311	*	DECAL,BATTERY,A デカル	1	[EXE/ENGLISH]
-	534A3-82331	*	DECAL,BATTERY,A デカル	1	[EXE/SPANISH]
-	534A3-82341	*	DECAL,BATTERY,A デカル	1	[EXE/FRENCH]
-	534A3-82321	*	DECAL,BATTERY,A デカル	1	[EXE/GERMAN]
-	534A3-82351	*	DECAL,BATTERY,A デカル	1	[EXE/DUTCH]
-	534A3-82361	*	DECAL,BATTERY,A デカル	1	[EXE/DANISH]
-	534A3-82371	*	DECAL,BATTERY,A デカル	1	[EXE/ITALIAN]
-	534A3-82381	*	DECAL,BATTERY,A デカル	1	[EXE/GREEK]
-	534A3-82391	*	DECAL,BATTERY,A デカル	1	[EXE/PORTUGUESE]
-	534A3-82701	*	DECAL,BATTERY,A デカル	1	[EXE/NORWEGIAN]
-	534A3-82711	*	DECAL,BATTERY,A デカル	1	[EXE/POLISH]
-	534A3-82721	*	DECAL,BATTERY,A デカル	1	[EXE/HUNGARIAN]
-	534A3-82731	*	DECAL,BATTERY,A デカル	1	[EXE/CZECH]
-	534A3-82741	*	DECAL,BATTERY,A デカル	1	[EXE/TURKISH]
16	534A3-82421	*	DECAL,BATTERY,B デカル	1	[EXE/ENGLISH]
-	534A3-82441	*	DECAL,BATTERY,B デカル	1	[EXE/SPANISH]
-	534A3-82451	*	DECAL,BATTERY,B デカル	1	[EXE/FRENCH]
-	534A3-82431	*	DECAL,BATTERY,B デカル	1	[EXE/GERMAN]
-	534A3-82461	*	DECAL,BATTERY,B デカル	1	[EXE/DUTCH]
-	534A3-82471	*	DECAL,BATTERY,B デカル	1	[EXE/DANISH]
-	534A3-82481	*	DECAL,BATTERY,B デカル	1	[EXE/ITALIAN]
-	534A3-82491	*	DECAL,BATTERY,B デカル	1	[EXE/GREEK]
-	534A3-82501	*	DECAL,BATTERY,B デカル	1	[EXE/PORTUGUESE]
-	534A3-82541	*	DECAL,BATTERY,B デカル	1	[EXE/NORWEGIAN]
-	534A3-82551	*	DECAL,BATTERY,B デカル	1	[EXE/POLISH]
-	534A3-82561	*	DECAL,BATTERY,B デカル	1	[EXE/HUNGARIAN]
-	534A3-82571	*	DECAL,BATTERY,B デカル	1	[EXE/CZECH]
-	534A3-82581	*	DECAL,BATTERY,B デカル	1	[EXE/TURKISH]
17	509K2-82251	*	DECAL,STEERING-HOSE デカル	1	[EXE/ENGLISH]
-	509K3-83011	*	DECAL,STEERING-HOSE デカル	1	[EXE/SPANISH]
-	509K3-83021	*	DECAL,STEERING-HOSE デカル	1	[EXE/FRENCH]

FIG.192 DECAL (2/2)[EXE]

(F70391E0) ﾃﾞｶﾙ(2/2)

KIT

K1	K2
901	902

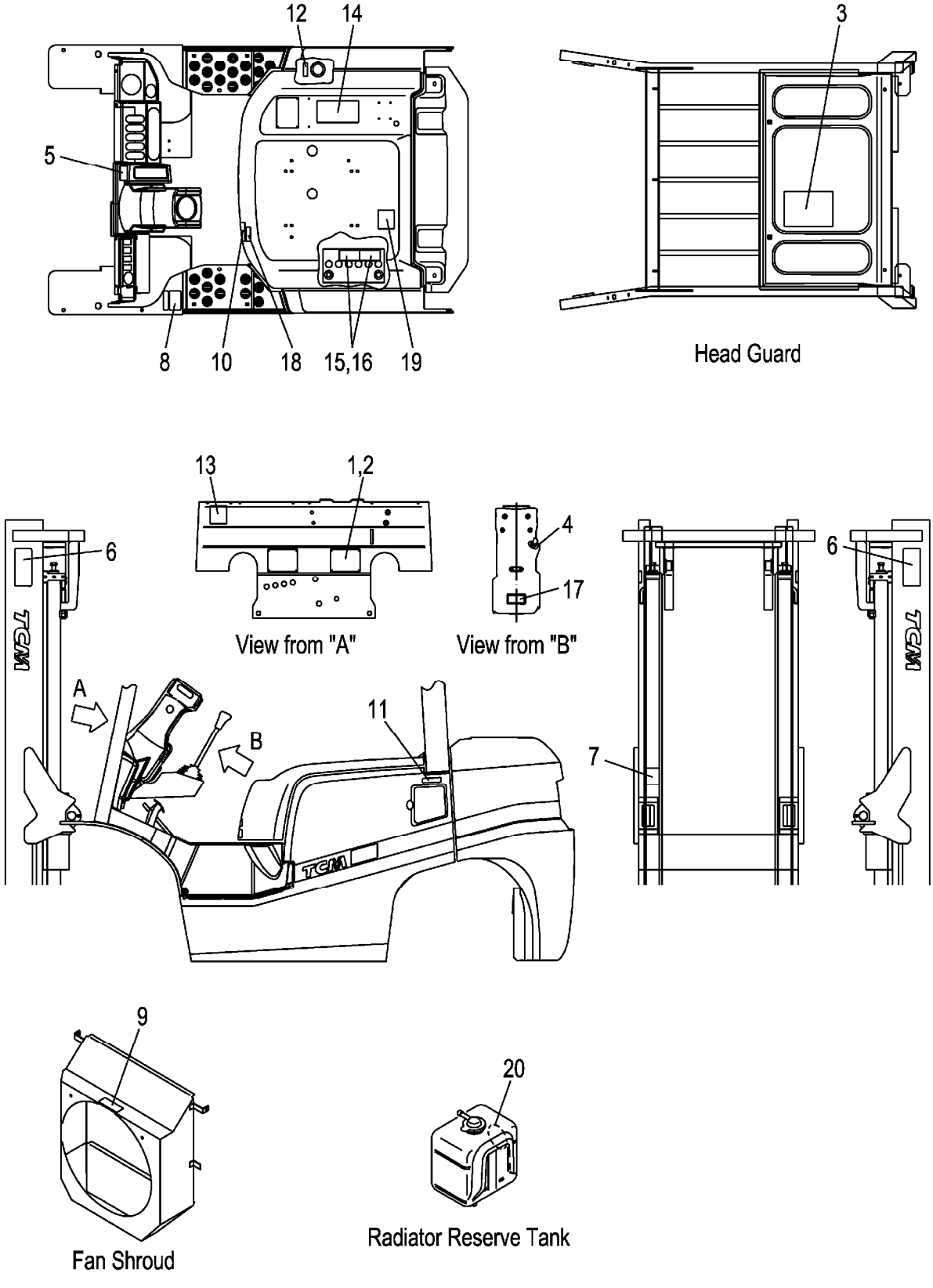

A:FG30C3 FG30T3
B:FD30C3 FD30T3

Item No	Part No.	Mark	Description	Req'd	Remarks : Serial No.
-	509K3-83001	*	DECAL,STEERING-HOSE デカル	1	[EXE/GERMAN]
-	509K3-83031	*	DECAL,STEERING-HOSE デカル	1	[EXE/DUTCH]
-	509K3-83041	*	DECAL,STEERING-HOSE デカル	1	[EXE/DANISH]
-	509K3-83051	*	DECAL,STEERING-HOSE デカル	1	[EXE/ITALIAN]
-	509K3-83061	*	DECAL,STEERING-HOSE デカル	1	[EXE/GREEK]
-	509K3-83071	*	DECAL,STEERING-HOSE デカル	1	[EXE/PORTUGUESE]
-	509K3-83401	*	DECAL,STEERING-HOSE デカル	1	[EXE/NORWEGIAN]
-	509K3-83411	*	DECAL,STEERING-HOSE デカル	1	[EXE/POLISH]
-	509K3-83421	*	DECAL,STEERING-HOSE デカル	1	[EXE/HUNGARIAN]
-	509K3-83431	*	DECAL,STEERING-HOSE デカル	1	[EXE/CZECH]
-	509K3-83441	*	DECAL,STEERING-HOSE デカル	1	[EXE/TURKISH]
18	52N52-72201	*	DECAL,BONNET-CAUTION デカル	1	[EXE/ENGLISH]
-	52N53-82301	*	DECAL,BONNET-CAUTION デカル	1	[EXE/SPANISH]
-	52N53-82311	*	DECAL,BONNET-CAUTION デカル	1	[EXE/FRENCH]
-	52N53-82321	*	DECAL,BONNET-CAUTION デカル	1	[EXE/GERMAN]
-	52N53-82331	*	DECAL,BONNET-CAUTION デカル	1	[EXE/DUTCH]
-	52N53-82341	*	DECAL,BONNET-CAUTION デカル	1	[EXE/DANISH]
-	52N53-82351	*	DECAL,BONNET-CAUTION デカル	1	[EXE/ITALIAN]
-	52N53-82361	*	DECAL,BONNET-CAUTION デカル	1	[EXE/GREEK]
-	52N53-82371	*	DECAL,BONNET-CAUTION デカル	1	[EXE/PORTUGUESE]
-	52N53-82401	*	DECAL,BONNET-CAUTION デカル	1	[EXE/NORWEGIAN]
-	52N53-82411	*	DECAL,BONNET-CAUTION デカル	1	[EXE/POLISH]
-	52N53-82421	*	DECAL,BONNET-CAUTION デカル	1	[EXE/HUNGARIAN]
-	52N53-82431	*	DECAL,BONNET-CAUTION デカル	1	[EXE/CZECH]
-	52N53-82441	*	DECAL,BONNET-CAUTION デカル	1	[EXE/TURKISH]
19	577H3-82151	*	DECAL,GAS-SPRING デカル	1	[EXE/ENGLISH]
-	577H3-82171	*	DECAL,GAS-SPRING デカル	1	[EXE/SPANISH]
-	577H3-82181	*	DECAL,GAS-SPRING デカル	1	[EXE/FRENCH]
-	577H3-82161	*	DECAL,GAS-SPRING デカル	1	[EXE/GERMAN]
-	577H3-82191	*	DECAL,GAS-SPRING デカル	1	[EXE/DUTCH]
-	577H3-82201	*	DECAL,GAS-SPRING デカル	1	[EXE/DANISH]
-	577H3-82211	*	DECAL,GAS-SPRING デカル	1	[EXE/ITALIAN]
-	577H3-82221	*	DECAL,GAS-SPRING デカル	1	[EXE/GREEK]
-	577H3-82231	*	DECAL,GAS-SPRING デカル	1	[EXE/PORTUGUESE]
-	577H3-82261	*	DECAL,GAS-SPRING デカル	1	[EXE/NORWEGIAN]
-	577H3-82701	*	DECAL,GAS-SPRING デカル	1	[EXE/POLISH]
-	577H3-82711	*	DECAL,GAS-SPRING デカル	1	[EXE/HUNGARIAN]
-	577H3-82721	*	DECAL,GAS-SPRING デカル	1	[EXE/CZECH]
-	577H3-82731	*	DECAL,GAS-SPRING デカル	1	[EXE/TURKISH]
20	23659-12101	*	DECAL,LIFE-COOLANT デカル	1	[EXE/ENGLISH]
-	522A3-82641	*	DECAL,LIFE-COOLANT デカル	1	[EXE/SPANISH]
-	522A3-82841	*	DECAL,LIFE-COOLANT デカル	1	[EXE/FRENCH]
-	522A3-82441	*	DECAL,LIFE-COOLANT デカル	1	[EXE/GERMAN]
-	522A3-83041	*	DECAL,LIFE-COOLANT デカル	1	[EXE/DUTCH]
-	522A3-83241	*	DECAL,LIFE-COOLANT デカル	1	[EXE/DANISH]
-	522A3-83441	*	DECAL,LIFE-COOLANT デカル	1	[EXE/ITALIAN]
-	522A3-83641	*	DECAL,LIFE-COOLANT デカル	1	[EXE/GREEK]
-	522A3-83841	*	DECAL,LIFE-COOLANT デカル	1	[EXE/PORTUGUESE]
-	529F3-82151	*	DECAL,LIFE-COOLANT デカル	1	[EXE/NORWEGIAN]
-	529F3-82801	*	DECAL,LIFE-COOLANT デカル	1	[EXE/POLISH]

FIG.192 DECAL (2/2)[EXE]

(F70391E0) ﾃﾞｶﾙ(2/2)

KIT

K1	K2
901	902

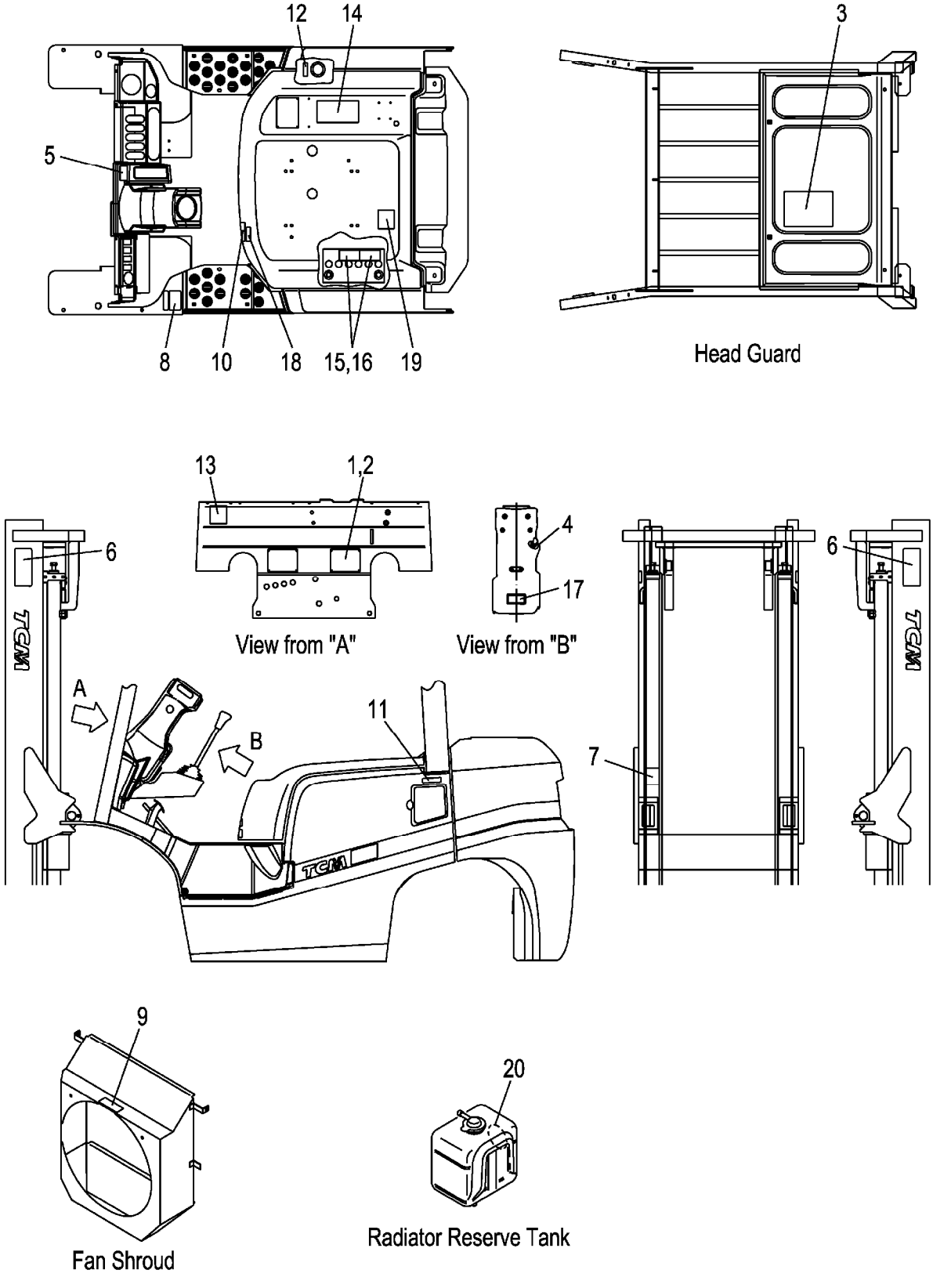

A:FG30C3 FG30T3
B:FD30C3 FD30T3

Item No	Part No.	Mark	Description	Req'd	Remarks : Serial No.
-	529F3-82811	*	DECAL,LIFE-COOLANT デカル	1	[EXE/HUNGARIAN]
-	529F3-82821	*	DECAL,LIFE-COOLANT デカル	1	[EXE/CZECH]
-	529F3-82831	*	DECAL,LIFE-COOLANT デカル	1	[EXE/TURKISH]

M E M O

M E M O

FIG.193 DECAL (2/2)[EXK]

(F70391K0) ﾃﾞｶﾙ(2/2)

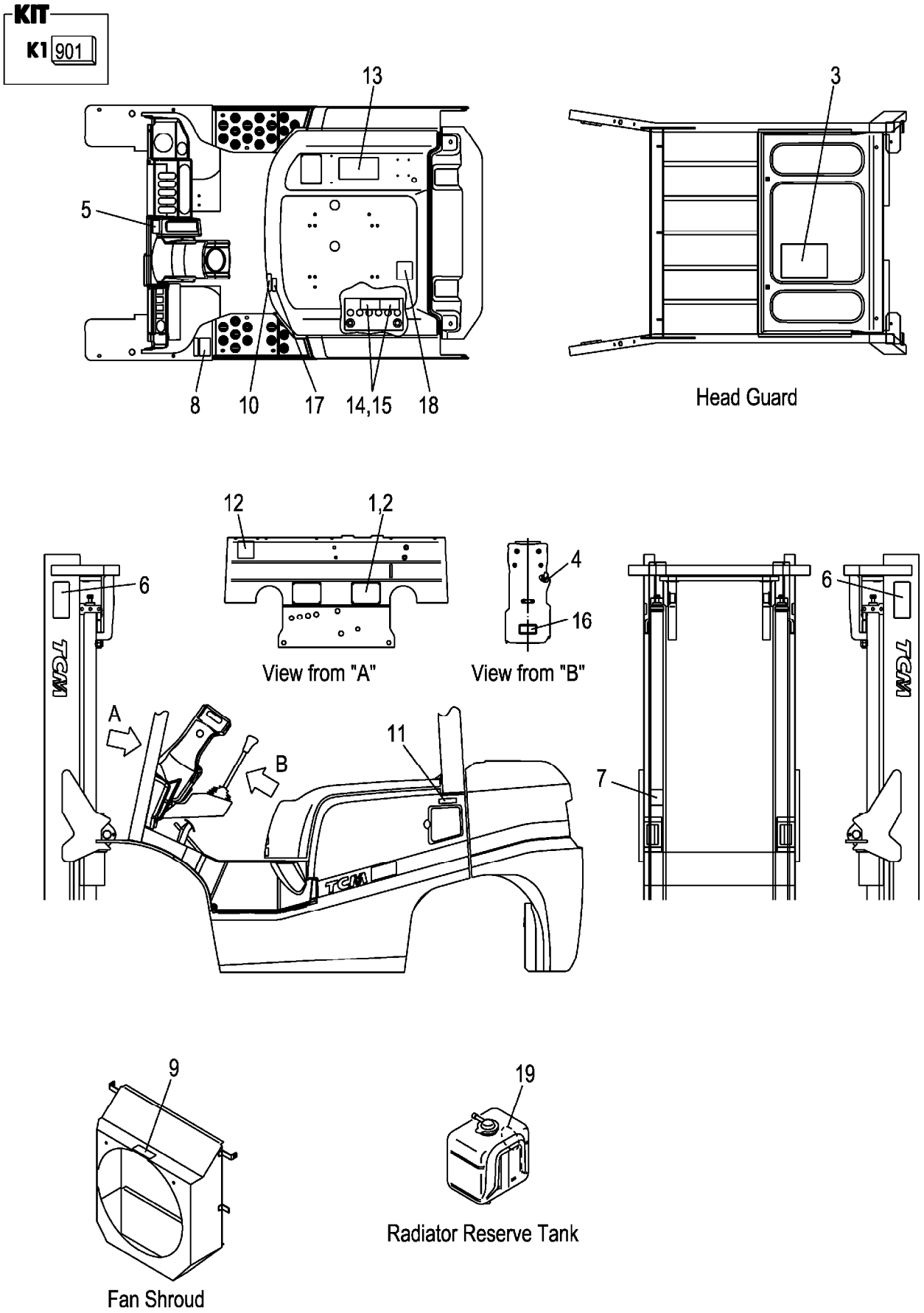

A:FG30C3 FG30T3
B:FD30C3 FD30T3

Item No	Part No.	Mark	Description		Req'd	Remarks : Serial No.
901	C-11452-2B0-E	K1	KIT,DECAL,ENGLISH	ﾃﾞｶﾙｷｯﾄ	1	A
						[EXK] INC.3-19,FIG.188:8,9
-	C-11452-2N0-E	K1	KIT,DECAL,ENGLISH	ﾃﾞｶﾙｷｯﾄ	1	B
						[EXK] INC.3-19,FIG.188:8,9
1	NO PART NO.	#	PLATE,NAME	ﾌﾟﾚｰﾄ	1	[EXK]
2	216G9-12131		RIVET	ﾘﾍﾞｯﾄ	4	[EXK]
3	52N52-72101	*	CHART,LUBRICATION	ﾁｬｰﾄ	1	[EXK]
4	216G9-12071	*	DECAL,STARTER-SWITCH	ﾃﾞｶﾙ	1	[EXK]
5	514A3-82002	*	DECAL,BRAKE-LEVER	ﾃﾞｶﾙ	1	[EXK]
6	27419-12061	*	DECAL,MAST-CAUTION	ﾃﾞｶﾙ	2	[EXK]
7	27419-12071	*	DECAL,CROSS-BEAM	ﾃﾞｶﾙ	1	[EXK]
8	516G2-72711	*	DECAL,TIRE-CAUTION	ﾃﾞｶﾙ	1	[EXK]
9	516G2-72701	*	DECAL,FAN-CAUTION	ﾃﾞｶﾙ	1	[EXK]
10	536G2-82181	*	DECAL,FUEL-CAPACITY	ﾃﾞｶﾙ	1	[EXK]
11	51232-82001	*	DECAL,GASOLINE	ﾃﾞｶﾙ	1	A
						[EXK]
-	509K3-82681	*	DECAL,LIGHT-OIL	ﾃﾞｶﾙ	1	B
						[EXK]
12	571A3-82361	*	DECAL,CAUTION	ﾃﾞｶﾙ	1	[EXK]
13	516G3-82801	*	DECAL,CAUTION	ﾃﾞｶﾙ	1	[EXK]
14	534A3-82311	*	DECAL,BATTERY,A	ﾃﾞｶﾙ	1	[EXK]
15	534A3-82421	*	DECAL,BATTERY,B	ﾃﾞｶﾙ	1	[EXK]
16	509K2-82251	*	DECAL,STEERING-HOSE	ﾃﾞｶﾙ	1	[EXK]
17	52N52-72201	*	DECAL,BONNET-CAUTION	ﾃﾞｶﾙ	1	[EXK]
18	577H3-82151	*	DECAL,GAS-SPRING	ﾃﾞｶﾙ	1	[EXK]
19	23659-12101	*	DECAL,LIFE-COOLANT	ﾃﾞｶﾙ	1	[EXK]

FIG.194 DECAL (2/2)[EXN]

(F70391N0) ﾃﾞｶﾙ(2/2)

KIT

K1 901 K2 902

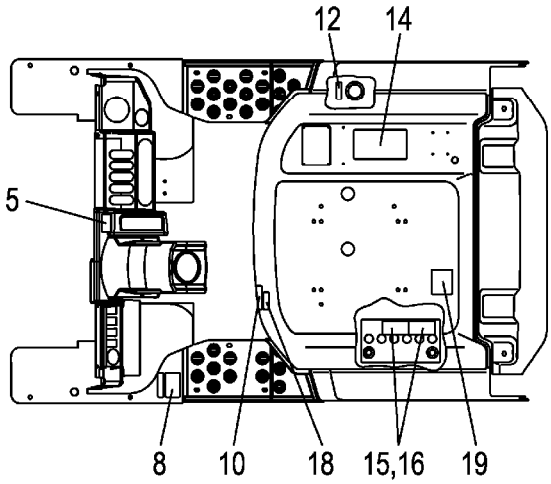

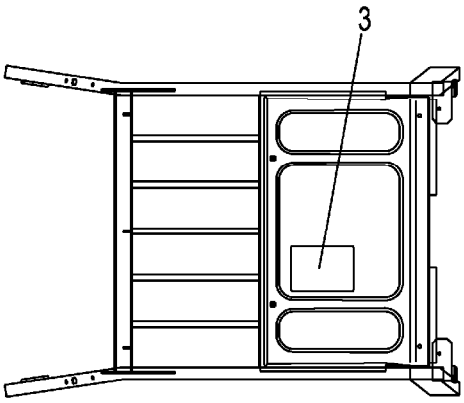

Head Guard

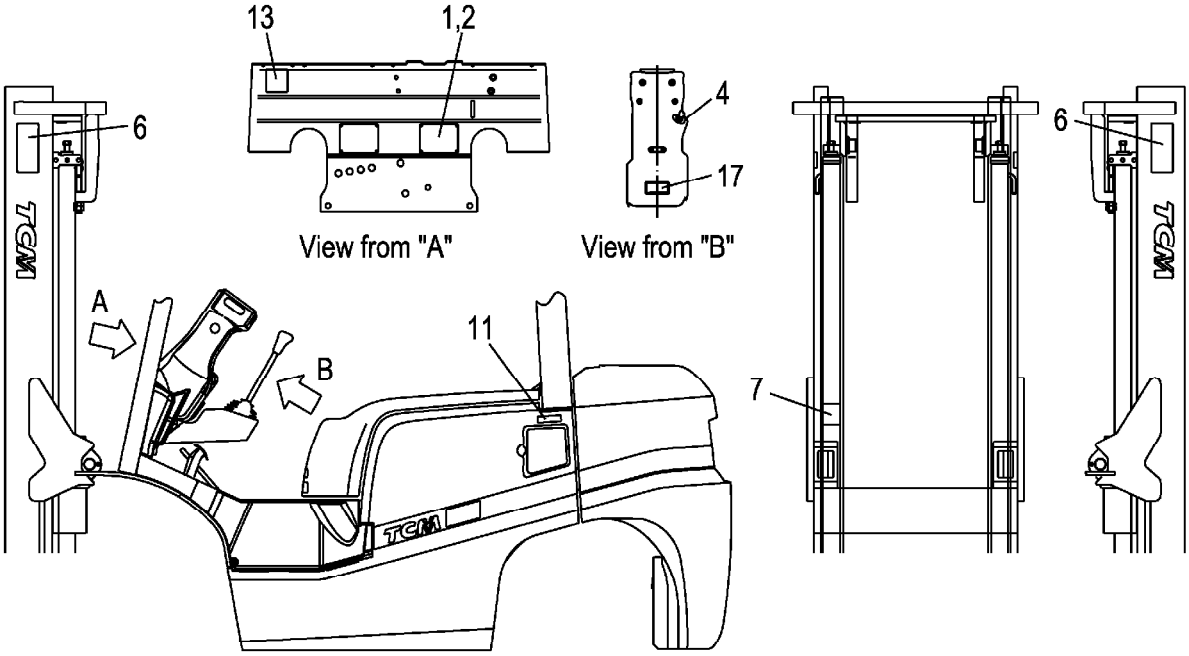

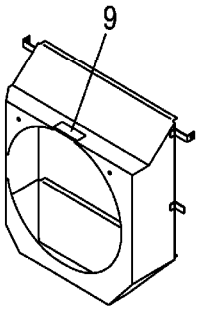

Fan Shroud

Radiator Reserve Tank

A:FG30C3 FG30T3
B:FD30C3 FD30T3

Item No	Part No.	Mark	Description		Req'd	Remarks : Serial No.
901	C-11452-2B0-E	K1	KIT,DECAL,ENGLISH	ﾃﾞｶﾙｷｯﾄ	1	A [EXN/ENGLISH] INC.3-11,13-20,FIG.188:8,9
-	C-11452-2N0-E	K1	KIT,DECAL,ENGLISH	ﾃﾞｶﾙｷｯﾄ	1	B [EXN/ENGLISH] INC.3-11,13-20,FIG.188:8,9
902	C-11452-2B0-DN	K2	KIT,DECAL,DANISH	ﾃﾞｶﾙｷｯﾄ	1	A [EXN/DANISH] INC.3-20,FIG.188:8,9
-	C-11452-2N0-DN	K2	KIT,DECAL,DANISH	ﾃﾞｶﾙｷｯﾄ	1	B [EXN/DANISH] INC.3-20,FIG.188:8,9
-	C-11452-2B0-SW	K2	KIT,DECAL,SWEDISH	ﾃﾞｶﾙｷｯﾄ	1	A [EXN/SWEDISH] INC.3-20,FIG.188:8,9
-	C-11452-2N0-SW	K2	KIT,DECAL,SWEDISH	ﾃﾞｶﾙｷｯﾄ	1	B [EXN/SWEDISH] INC.3-20,FIG.188:8,9
-	C-11452-2B0-FI	K2	KIT,DECAL,FINNISH	ﾃﾞｶﾙｷｯﾄ	1	A [EXN/FINNISH] INC.3-20,FIG.188:8,9
-	C-11452-2N0-FI	K2	KIT,DECAL,FINNISH	ﾃﾞｶﾙｷｯﾄ	1	B [EXN/FINNISH] INC.3-20,FIG.188:8,9
1	NO PART NO.	#	PLATE,NAME	ﾌﾟﾚｰﾄ	1	[EXN/ENGLISH]
-	NO PART NO.	#	PLATE,NAME	ﾌﾟﾚｰﾄ	1	[EXN/DANISH]
-	NO PART NO.	#	PLATE,NAME	ﾌﾟﾚｰﾄ	1	[EXN/SWEDISH]
-	NO PART NO.	#	PLATE,NAME	ﾌﾟﾚｰﾄ	1	[EXN/FINNISH]
2	216G9-12131		RIVET	ﾘﾍﾞｯﾄ	4	[EXN]
3	52N52-72101	*	CHART,LUBRICATION	ﾁｬｰﾄ	1	[EXN/ENGLISH]
-	52N53-82141	*	CHART,LUBRICATION	ﾁｬｰﾄ	1	[EXN/DANISH]
-	52N53-82191	*	CHART,LUBRICATION	ﾁｬｰﾄ	1	[EXN/SWEDISH]
-	52N53-82181	*	CHART,LUBRICATION	ﾁｬｰﾄ	1	[EXN/FINNISH]
4	216G9-12071	*	DECAL,STARTER-SWITCH	ﾃﾞｶﾙ	1	[EXN/ENGLISH]
-	516G3-82031	*	DECAL,STARTER-SWITCH	ﾃﾞｶﾙ	1	[EXN/DANISH]
-	516G3-82071	*	DECAL,STARTER-SWITCH	ﾃﾞｶﾙ	1	[EXN/SWEDISH]
-	516G3-82061	*	DECAL,STARTER-SWITCH	ﾃﾞｶﾙ	1	[EXN/FINNISH]
5	514A3-82002	*	DECAL,BRAKE-LEVER	ﾃﾞｶﾙ	1	[EXN/ENGLISH]
-	514A3-82042	*	DECAL,BRAKE-LEVER	ﾃﾞｶﾙ	1	[EXN/DANISH]
-	529F3-82252	*	DECAL,BRAKE-LEVER	ﾃﾞｶﾙ	1	[EXN/SWEDISH]
-	529F3-82242	*	DECAL,BRAKE-LEVER	ﾃﾞｶﾙ	1	[EXN/FINNISH]
6	27419-12061	*	DECAL,MAST-CAUTION	ﾃﾞｶﾙ	2	[EXN]
7	27419-12071	*	DECAL,CROSS-BEAM	ﾃﾞｶﾙ	1	[EXN]
8	516G2-72711	*	DECAL,TIRE-CAUTION	ﾃﾞｶﾙ	1	[EXN/ENGLISH]
-	516G3-82241	*	DECAL,TIRE-CAUTION	ﾃﾞｶﾙ	1	[EXN/DANISH]
-	516G3-82291	*	DECAL,TIRE-CAUTION	ﾃﾞｶﾙ	1	[EXN/SWEDISH]
-	516G3-82281	*	DECAL,TIRE-CAUTION	ﾃﾞｶﾙ	1	[EXN/FINNISH]
9	516G2-72701	*	DECAL,FAN-CAUTION	ﾃﾞｶﾙ	1	[EXN/ENGLISH]
-	516G3-82141	*	DECAL,FAN-CAUTION	ﾃﾞｶﾙ	1	[EXN/DANISH]
-	516G3-82191	*	DECAL,FAN-CAUTION	ﾃﾞｶﾙ	1	[EXN/SWEDISH]

FIG.194 DECAL (2/2)[EXN]

(F70391N0) ﾃﾞｶﾙ(2/2)

KIT

K1 901 K2 902

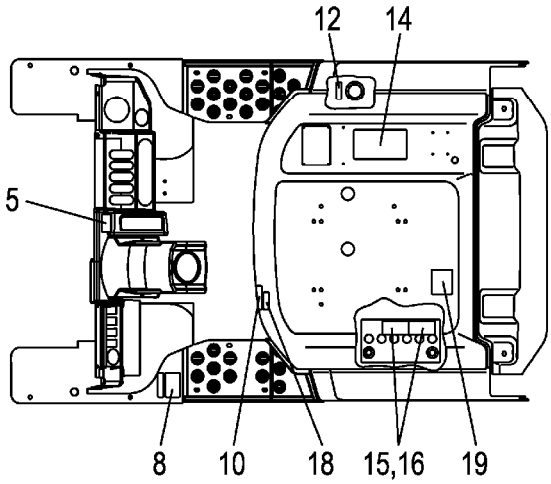

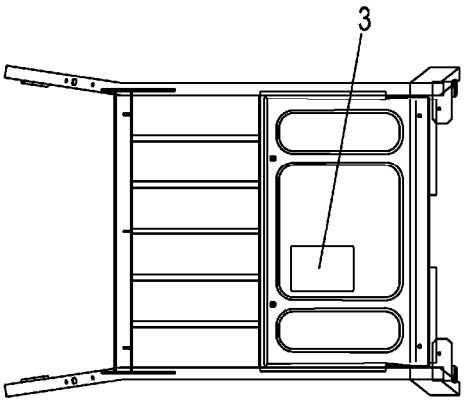

Head Guard

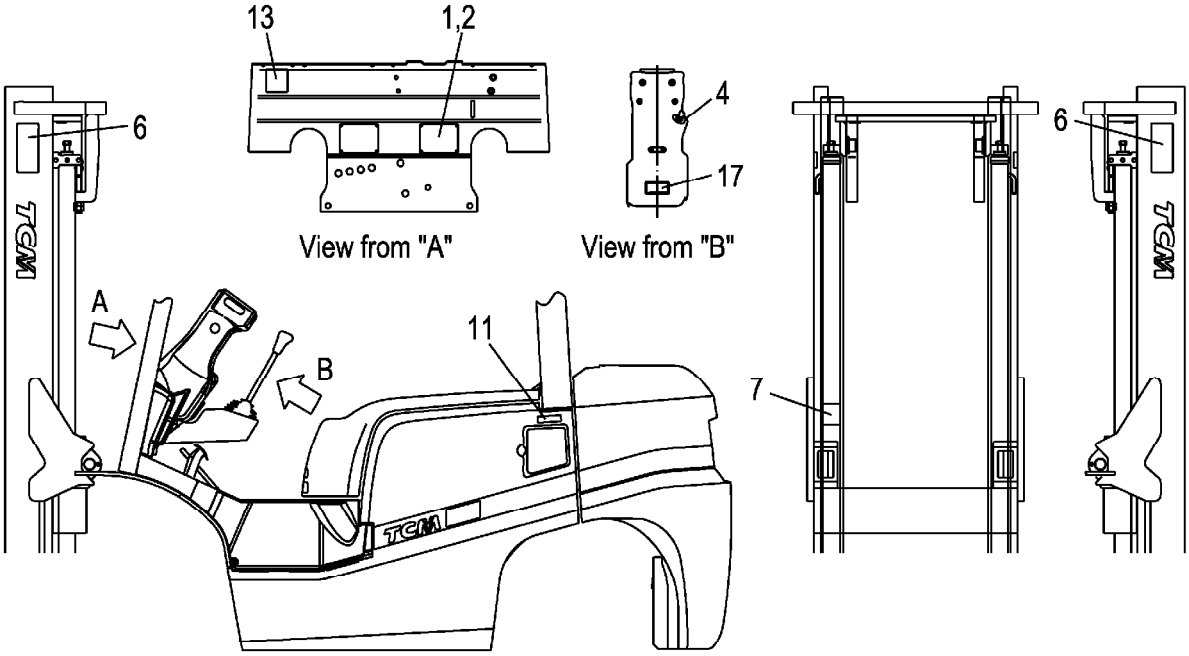

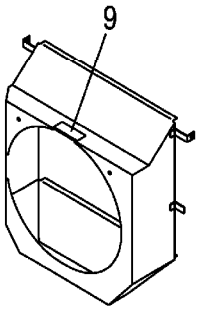

Fan Shroud

Radiator Reserve Tank

A:FG30C3 FG30T3
B:FD30C3 FD30T3

Item No	Part No.	Mark	Description	Req'd	Remarks : Serial No.
-	516G3-82181	*	DECAL,FAN-CAUTION デカル	1	[EXN/FINNISH]
10	536G2-82181	*	DECAL,FUEL-CAPACITY デカル	1	[EXN/ENGLISH]
-	536G3-82041	*	DECAL,FUEL-CAPACITY デカル	1	[EXN/DANISH]
-	536G3-82091	*	DECAL,FUEL-CAPACITY デカル	1	[EXN/SWEDISH]
-	536G3-82081	*	DECAL,FUEL-CAPACITY デカル	1	[EXN/FINNISH]
11	51232-82001	*	DECAL,GASOLINE デカル	1	A [EXN/ENGLISH]
-	509K3-82681	*	DECAL,LIGHT-OIL デカル	1	B [EXN/ENGLISH]
-	51233-83221	*	DECAL,GASOLINE デカル	1	A [EXN/DANISH]
-	509K3-82841	*	DECAL,LIGHT-OIL デカル	1	B [EXN/DANISH]
-	528F3-82031	*	DECAL,GASOLINE デカル	1	A [EXN/SWEDISH]
-	509K3-82891	*	DECAL,LIGHT-OIL デカル	1	B [EXN/SWEDISH]
-	528F3-82021	*	DECAL,GASOLINE デカル	1	A [EXN/FINNISH]
-	509K3-82881	*	DECAL,LIGHT-OIL デカル	1	B [EXN/FINNISH]
12	522A3-83061	*	DECAL,OIL デカル	1	[EXN/DANISH]
-	529F3-82071	*	DECAL,OIL デカル	1	[EXN/SWEDISH]
-	529F3-82061	*	DECAL,OIL デカル	1	[EXN/FINNISH]
13	571A3-82361	*	DECAL,CAUTION デカル	1	[EXN]
14	516G3-82801	*	DECAL,CAUTION デカル	1	[EXN/ENGLISH]
-	516G3-82851	*	DECAL,CAUTION デカル	1	[EXN/DANISH]
-	516G3-82891	*	DECAL,CAUTION デカル	1	[EXN/SWEDISH]
-	516G3-82901	*	DECAL,CAUTION デカル	1	[EXN/FINNISH]
15	534A3-82311	*	DECAL,BATTERY,A デカル	1	[EXN/ENGLISH]
-	534A3-82361	*	DECAL,BATTERY,A デカル	1	[EXN/DANISH]
-	534A3-82411	*	DECAL,BATTERY,A デカル	1	[EXN/SWEDISH]
-	534A3-82401	*	DECAL,BATTERY,A デカル	1	[EXN/FINNISH]
16	534A3-82421	*	DECAL,BATTERY,B デカル	1	[EXN/ENGLISH]
-	534A3-82471	*	DECAL,BATTERY,B デカル	1	[EXN/DANISH]
-	534A3-82521	*	DECAL,BATTERY,B デカル	1	[EXN/SWEDISH]
-	534A3-82511	*	DECAL,BATTERY,B デカル	1	[EXN/FINNISH]
17	509K2-82251	*	DECAL,STEERING-HOSE デカル	1	[EXE/ENGLISH]
-	509K3-83041	*	DECAL,STEERING-HOSE デカル	1	[EXE/DANISH]
-	509K3-83091	*	DECAL,STEERING-HOSE デカル	1	[EXN/SWEDISH]
-	509K3-83081	*	DECAL,STEERING-HOSE デカル	1	[EXN/FINNISH]
18	52N52-72201	*	DECAL,BONNET-CAUTION デカル	1	[EXE/ENGLISH]
-	52N53-82341	*	DECAL,BONNET-CAUTION デカル	1	[EXE/DANISH]
-	52N53-82391	*	DECAL,BONNET-CAUTION デカル	1	[EXN/SWEDISH]
-	52N53-82381	*	DECAL,BONNET-CAUTION デカル	1	[EXN/FINNISH]
19	577H3-82151	*	DECAL,GAS-SPRING デカル	1	[EXE/ENGLISH]
-	577H3-82201	*	DECAL,GAS-SPRING デカル	1	[EXE/DANISH]
-	577H3-82251	*	DECAL,GAS-SPRING デカル	1	[EXN/SWEDISH]
-	577H3-82241	*	DECAL,GAS-SPRING デカル	1	[EXN/FINNISH]
20	23659-12101	*	DECAL,LIFE-COOLANT デカル	1	[EXE/ENGLISH]

FIG.194 DECAL (2/2)[EXN]

(F70391N0) ﾃﾞｶﾙ(2/2)

KIT

K1 901 K2 902

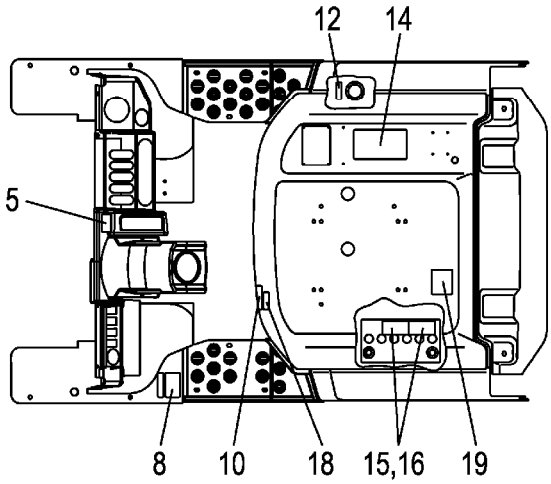

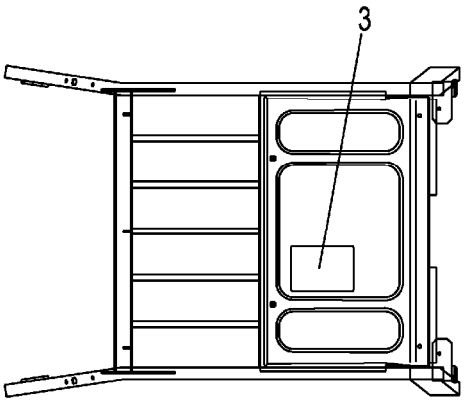

Head Guard

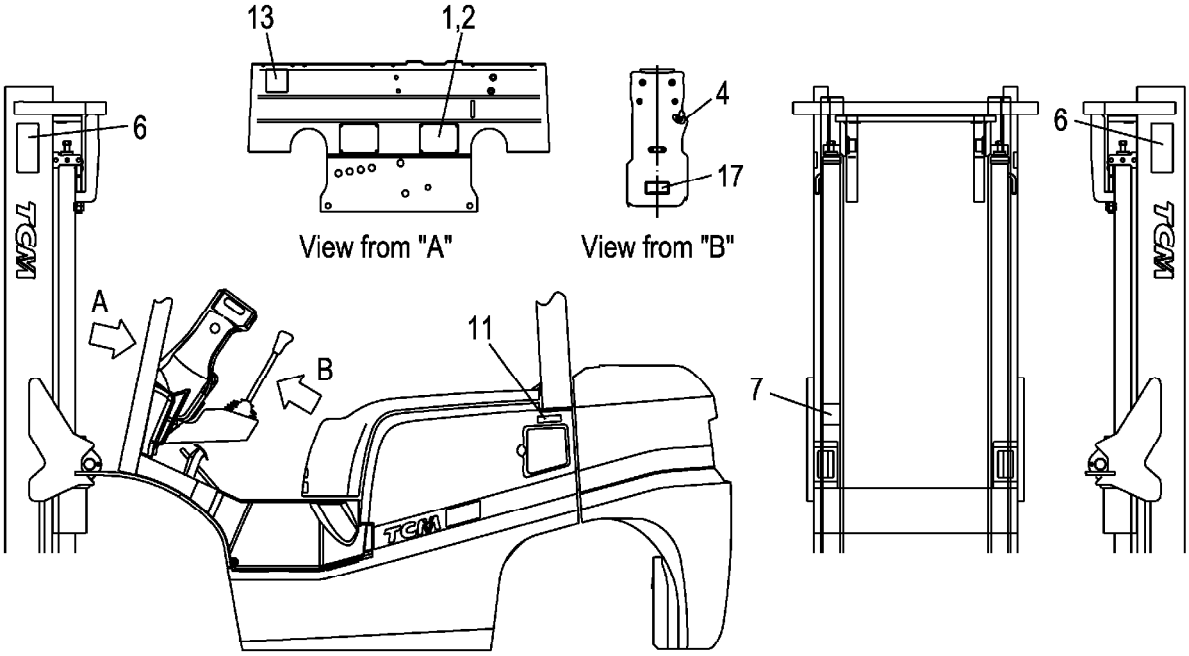

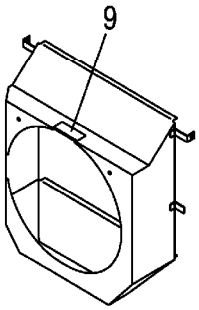

Fan Shroud

Radiator Reserve Tank

A:FG30C3 FG30T3
B:FD30C3 FD30T3

Item No	Part No.	Mark	Description	Req'd	Remarks : Serial No.
-	522A3-83241	*	DECAL,LIFE-COOLANT デカル	1	[EXE/DANISH]
-	529F3-82091	*	DECAL,LIFE-COOLANT デカル	1	[EXN/SWEDISH]
-	529F3-82081	*	DECAL,LIFE-COOLANT デカル	1	[EXN/FINNISH]

FIG.195 SERVICE TOOL [TO][EX]

(F7039210) サービスツール

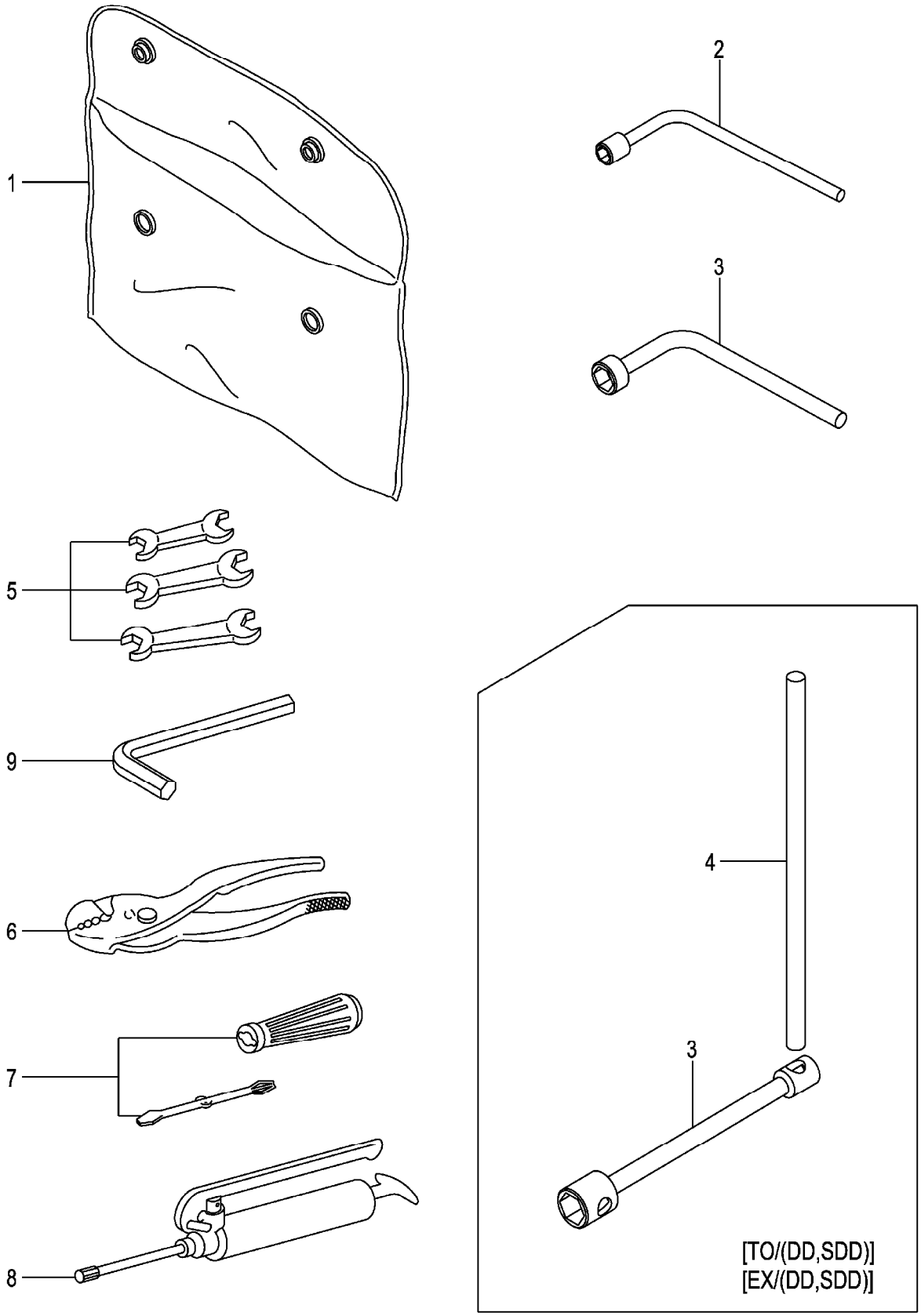

A:FG30C3 FG30T3 C:FD30C3 FD30T3
B:FG30W3 D:FD30W3

Item No	Part No.	Mark	Description		Req'd	Remarks : Serial No.
1	214A9-20101		SACK,SERVICE-TOOLS	ｻｯｸ	1	[TO]
-	214A9-20101		SACK,SERVICE-TOOLS	ｻｯｸ	1	A,C
						[EX]
2	22199-22251		WRENCH,HUB-NUT,21MM	ﾚﾝﾁ	1	[TO](REAR)
-	22199-22251		WRENCH,HUB-NUT,21MM	ﾚﾝﾁ	1	A,C
						[EX](REAR)
3	24499-22011		WRENCH,HUB-NUT,41MM	ﾚﾝﾁ	1	[TO](FRONT)
-	24499-22011		WRENCH,HUB-NUT,41MM	ﾚﾝﾁ	1	A,C
						[EX](FRONT)
-	23819-20011		WRENCH,HUB-NUT,41MM	ﾚﾝﾁ	1	[TO/DD][TO/SDD](FRONT)
-	23819-20011		WRENCH,HUB-NUT,41MM	ﾚﾝﾁ	1	A,C
						[EX/DD][EX/SDD](FRONT)
4	23819-20021		LEVER,WRENCH,HUB-NUT	ﾚﾊﾞｰ	1	[TO/DD][TO/SDD]
-	23819-20021		LEVER,WRENCH,HUB-NUT	ﾚﾊﾞｰ	1	A,C
						[EX/DD][EX/SDD]
5	25599-22051		SET,SPANNER	ｽﾊﾟﾅｾｯﾄ	1	[TO]
-	25599-22051		SET,SPANNER	ｽﾊﾟﾅｾｯﾄ	1	A,C
						[EX]
6	23019-20011		PLIER,150MM	ﾌﾟﾗｲﾔ	1	[TO]
-	23019-20011		PLIER,150MM	ﾌﾟﾗｲﾔ	1	A,C
						[EX]
7	22199-22261		SET,DRIVER	ﾄﾞﾗｲﾊﾞｾｯﾄ	1	[TO]
-	22199-22261		SET,DRIVER	ﾄﾞﾗｲﾊﾞｾｯﾄ	1	A,C
						[EX]
8	22199-22001		GUN,GREASE	ｶﾞﾝ	1	[TO]
-	22199-22001		GUN,GREASE	ｶﾞﾝ	1	A,C
						[EX]
9	25599-22061		WRENCH,HEXAGON	ﾚﾝﾁ	1	[TO]
-	25599-22061		WRENCH,HEXAGON	ﾚﾝﾁ	1	A,C
						[EX]

FIG.196 FORK [VM2N9]

(M7028120) フォーク

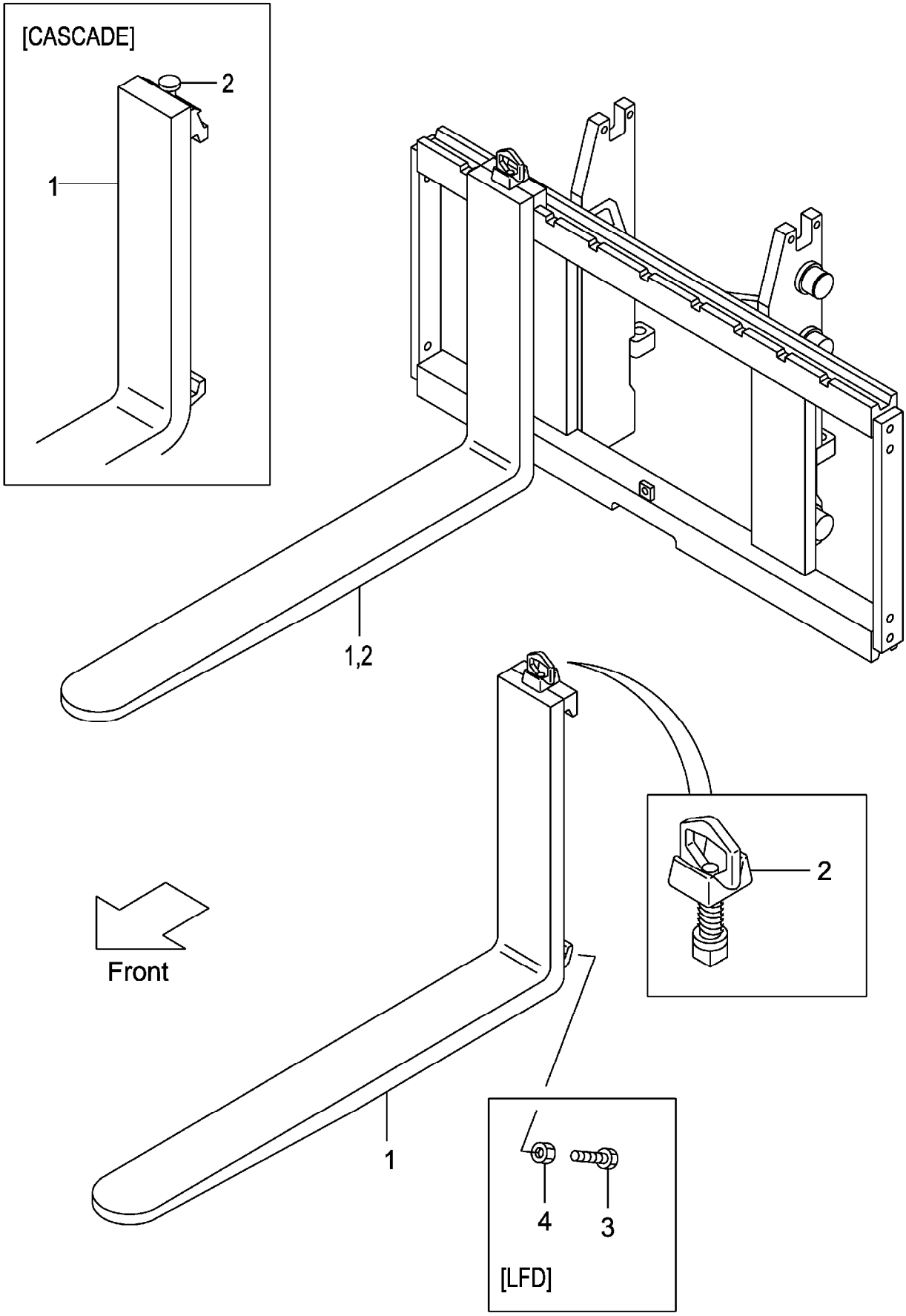

A:VM2N9(3T)

Item No	Part No.	Mark	Description		Req'd	Remarks : Serial No.
1	214J8-10581		FORK	ﾌｫｰｸ	2	[LF100] INC.2
-	214J8-10501		FORK	ﾌｫｰｸ	2	[LF107] INC.2
-	214J8-10501		FORK	ﾌｫｰｸ	2	(L=1070) INC.2
-	214J8-10591		FORK	ﾌｫｰｸ	2	[LF110] INC.2
-	214J8-10601		FORK	ﾌｫｰｸ	2	[LF120] INC.2
-	214J8-10511		FORK	ﾌｫｰｸ	2	[LF122] INC.2
-	214J8-10611		FORK	ﾌｫｰｸ	2	[LF130] INC.2
-	214J8-10521		FORK	ﾌｫｰｸ	2	[LF137] INC.2
-	214J8-10621		FORK	ﾌｫｰｸ	2	[LF140] INC.2
-	214J8-10631		FORK	ﾌｫｰｸ	2	[LF150] INC.2
-	214J8-10531		FORK	ﾌｫｰｸ	2	[LF152] INC.2
-	214J8-10641		FORK	ﾌｫｰｸ	2	[LF160] INC.2
-	214J8-10541		FORK	ﾌｫｰｸ	2	[LF167] INC.2
-	214J8-10651		FORK	ﾌｫｰｸ	2	[LF170] INC.2
-	214J8-10661		FORK	ﾌｫｰｸ	2	[LF180] INC.2
-	214J8-10551		FORK	ﾌｫｰｸ	2	[LF182] INC.2
-	214J8-10671		FORK	ﾌｫｰｸ	2	[LF190] INC.2
-	214J8-10561		FORK	ﾌｫｰｸ	2	[LF197] INC.2
-	214J8-10681		FORK	ﾌｫｰｸ	2	[LF200] INC.2
-	214J8-10571		FORK	ﾌｫｰｸ	2	[LF212] INC.2
-	234F8-10581		FORK	ﾌｫｰｸ	2	[LFD100] INC.2
-	234F8-10501		FORK	ﾌｫｰｸ	2	[LFD107] INC.2
-	234F8-10591		FORK	ﾌｫｰｸ	2	[LFD110] INC.2
-	234F8-10601		FORK	ﾌｫｰｸ	2	[LFD120] INC.2
-	234F8-10511		FORK	ﾌｫｰｸ	2	[LFD122] INC.2
-	234F8-10611		FORK	ﾌｫｰｸ	2	[LFD130] INC.2
-	234F8-10521		FORK	ﾌｫｰｸ	2	[LFD137] INC.2
-	234F8-10621		FORK	ﾌｫｰｸ	2	[LFD140] INC.2
-	234F8-10631		FORK	ﾌｫｰｸ	2	[LFD150] INC.2
-	234F8-10531		FORK	ﾌｫｰｸ	2	[LFD152] INC.2
-	234F8-10641		FORK	ﾌｫｰｸ	2	[LFD160] INC.2
-	234F8-10541		FORK	ﾌｫｰｸ	2	[LFD167] INC.2
-	234F8-10651		FORK	ﾌｫｰｸ	2	[LFD170] INC.2
-	234F8-10661		FORK	ﾌｫｰｸ	2	[LFD180] INC.2
-	234F8-10551		FORK	ﾌｫｰｸ	2	[LFD182] INC.2
-	234F8-10671		FORK	ﾌｫｰｸ	2	[LFD190] INC.2
-	234F8-10561		FORK	ﾌｫｰｸ	2	[LFD197] INC.2
-	234F8-10681		FORK	ﾌｫｰｸ	2	[LFD200] INC.2
-	234F8-10571		FORK	ﾌｫｰｸ	2	[LFD212] INC.2
-	22N98-10501		FORK	ﾌｫｰｸ	2	[LF107/CASCADE] INC.2
-	22N98-10511		FORK	ﾌｫｰｸ	2	[LF122/CASCADE] INC.2
2	214J8-11002		STOPPER,FORK	ｽﾄｯﾊﾟ	2	
-	W-K3PK-M		KIT,PIN,STOPPER	ｽﾄｯﾊﾟｷｯﾄ	2	[CASCADE]
3	234F8-12101		BOLT	ﾎﾞﾙﾄ	4	[LFD]
4	01402-00010		NUT	ﾅｯﾄ	4	[LFD]

FIG.197 LIFT BRACKET [VM2N9]

(M7028230) ﾘﾌﾄﾌﾞﾗｹｯﾄ

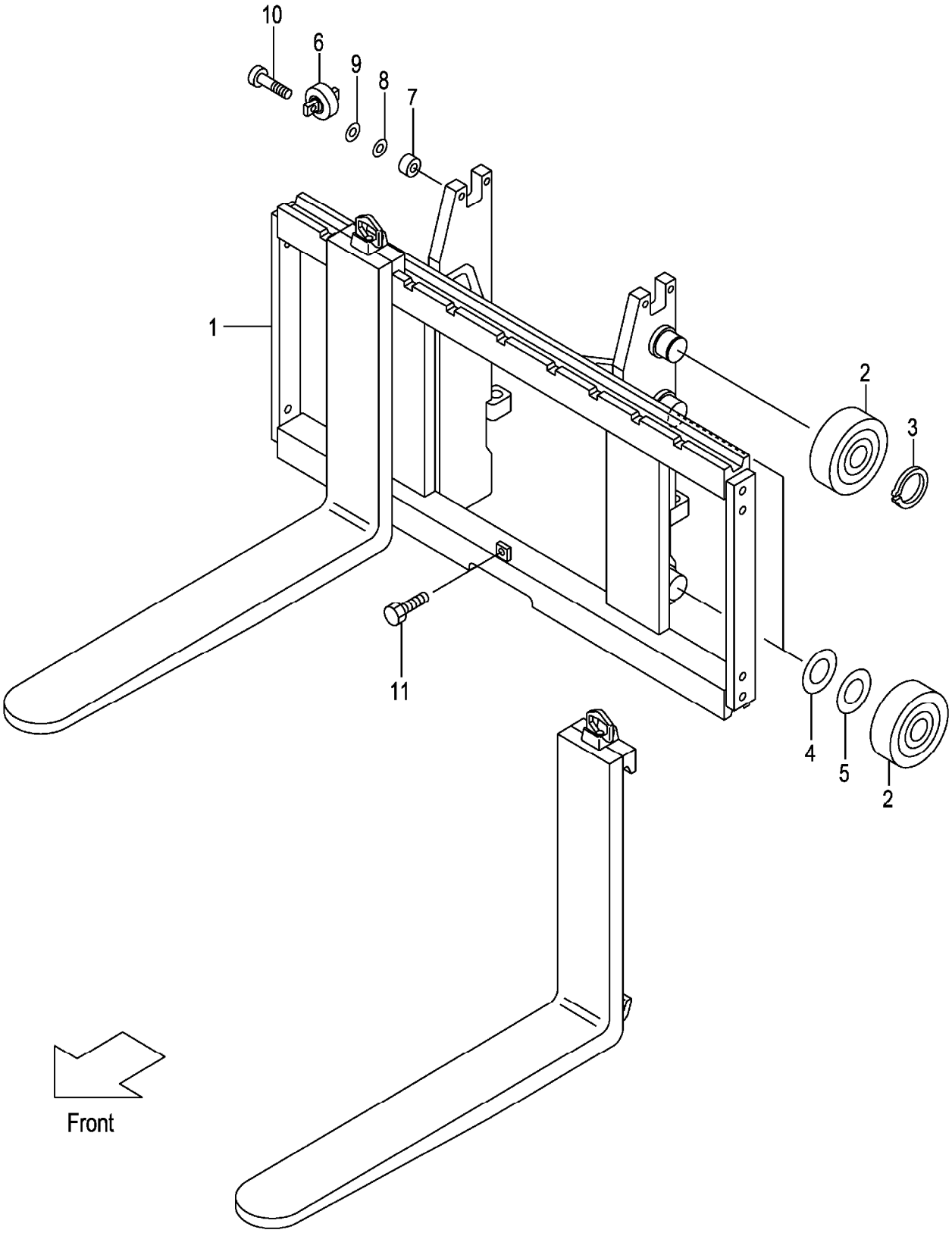

A:VM2N9(3T)

Item No	Part No.	Mark	Description		Req'd	Remarks : Serial No.
1	22N98-20201		BRACKET,LIFT	ﾌﾞﾗｹｯﾄ	1	
2	277P8-22051		ROLLER,END,119.0	ﾛｰﾗ	6	
-	277P8-22061		ROLLER,END,119.5	ﾛｰﾗ	(6)	
3	02100-00045		RING,SNAP	ｽﾅｯﾌﾟﾘﾝｸﾞ	2	
4	277P8-22071		SHIM,T-0.5	ｼﾑ	5	
5	277P8-22081		SHIM,T-1.0	ｼﾑ	5	
6	22N58-32701		ROLLER,SIDE	ﾛｰﾗ	2	
7	22N58-32711		SPACER	ｽﾍﾟｰｻ	4	
8	22018-30261		SHIM,T-0.5	ｼﾑ	4	
9	22018-30121		SHIM,T-1.0	ｼﾑ	4	
10	01103-10045		BOLT	ﾎﾞﾙﾄ	4	
11	01184-12025		BOLT & WASHER	ﾎﾞﾙﾄ & ﾜｯｼｬ	1	

FIG.198 BACKREST [VM2N9]

(M7028240) ﾊﾞｯｸﾚｽﾄ

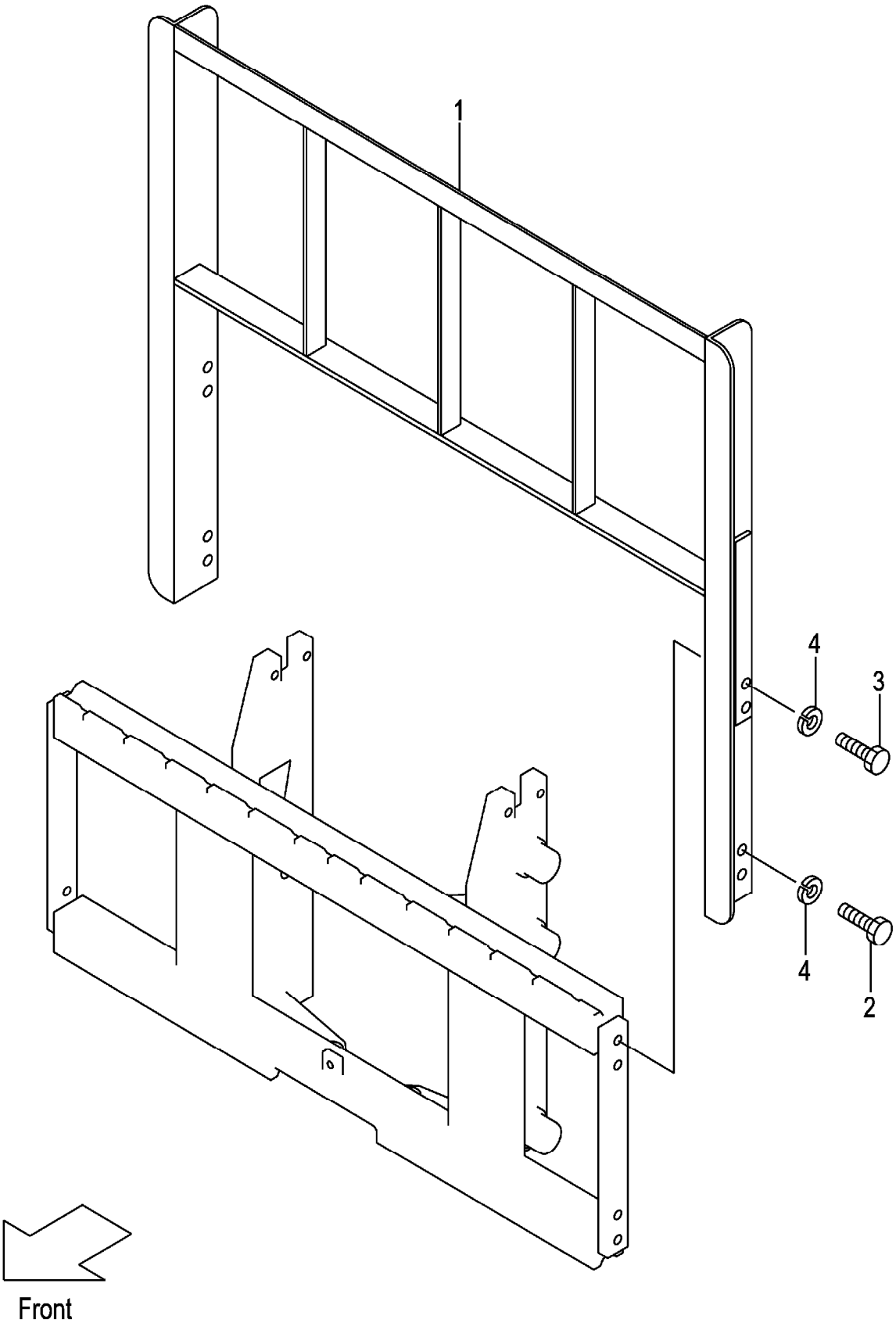

A:VM2N9(3T)

Item No	Part No.	Mark	Description		Req'd	Remarks : Serial No.
1	234F8-22201		BACKREST	ﾊﾞｯｸﾚｽﾄ	1	
2	01100-14025		BOLT	ﾎﾞﾙﾄ	4	
3	01100-14030		BOLT	ﾎﾞﾙﾄ	4	
4	02010-00014		WASHER	ﾜｯｼｬ	8	

FIG.199 MAST [VM2N9]

(M7028320) マスト

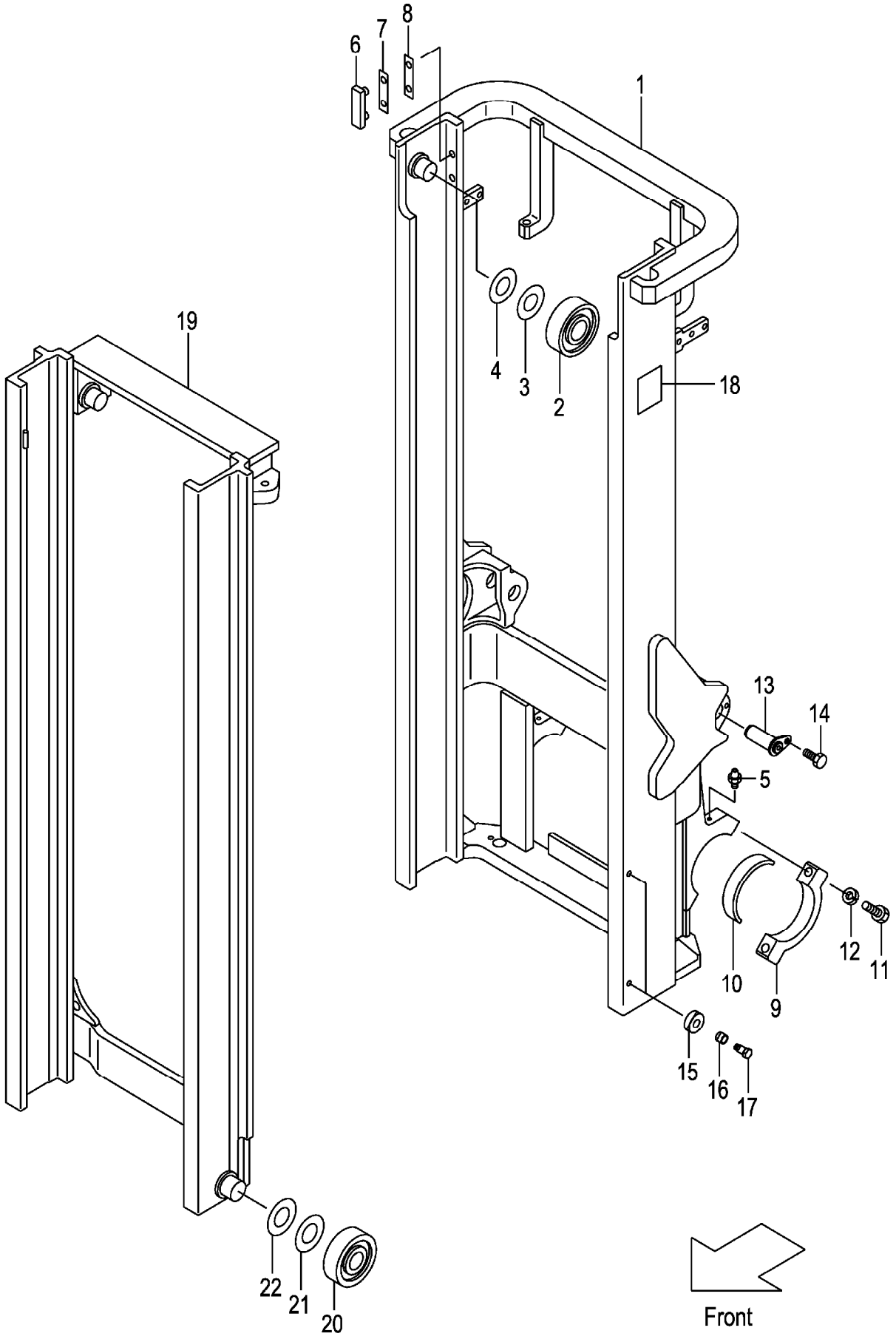

A:VM2N9(3T)

Item No	Part No.	Mark	Description		Req'd	Remarks : Serial No.
1	22N98-30211		MAST,OUTER VM200	ｱｳﾀﾏｽﾄ	1	
-	22N98-30221		MAST,OUTER VM225	ｱｳﾀﾏｽﾄ	1	
-	22N98-30231		MAST,OUTER VM250	ｱｳﾀﾏｽﾄ	1	
-	22N98-30241		MAST,OUTER VM270	ｱｳﾀﾏｽﾄ	1	
-	22N98-30251		MAST,OUTER VM275	ｱｳﾀﾏｽﾄ	1	
-	22N98-30201		MAST,OUTER VM300	ｱｳﾀﾏｽﾄ	1	
-	22N98-30261		MAST,OUTER VM325	ｱｳﾀﾏｽﾄ	1	
-	22N98-30271		MAST,OUTER VM330	ｱｳﾀﾏｽﾄ	1	
-	22N98-30281		MAST,OUTER VM350	ｱｳﾀﾏｽﾄ	1	
-	22N98-30291		MAST,OUTER VM366	ｱｳﾀﾏｽﾄ	1	
-	22N98-30301		MAST,OUTER VM370	ｱｳﾀﾏｽﾄ	1	
-	22N98-30311		MAST,OUTER VM375	ｱｳﾀﾏｽﾄ	1	
-	22N98-30321		MAST,OUTER VM400	ｱｳﾀﾏｽﾄ	1	
-	22N98-30331		MAST,OUTER VM425	ｱｳﾀﾏｽﾄ	1	
-	22N98-30341		MAST,OUTER VM450	ｱｳﾀﾏｽﾄ	1	
-	22N98-30351		MAST,OUTER VM475	ｱｳﾀﾏｽﾄ	1	
-	22N98-30361		MAST,OUTER VM500	ｱｳﾀﾏｽﾄ	1	
-	22N98-30371		MAST,OUTER VM550	ｱｳﾀﾏｽﾄ	1	
-	22N98-30381		MAST,OUTER VM600	ｱｳﾀﾏｽﾄ	1	
2	277P8-22051		ROLLER,END,119.0	ﾛｰﾗ	2	
3	277P8-22071		SHIM,T-0.5	ｼﾑ	12	
4	277P8-22081		SHIM,T-1.0	ｼﾑ	12	
5	04901-00100		FITTING	ﾌｨｯﾃｨﾝｸﾞ	2	
6	216G8-33401		SLIPPER	ｽﾘｯﾊﾟ	2	
7	216G8-33361		SHIM,T-0.5	ｼﾑ	8	
8	216G8-33371		SHIM,T-1.0	ｼﾑ	4	
9	277P8-32701		CAP	ｷｬｯﾌﾟ	2	
10	214A8-02201		BUSHING	ﾌﾞｯｼﾝｸﾞ	2	
11	01103-16065		BOLT	ﾎﾞﾙﾄ	4	
12	02011-00016		WASHER	ﾜｯｼｬ	4	
13	272K8-52201		PIN	ﾋﾟﾝ	2	
14	216G8-52301		BOLT & WASHER	ﾎﾞﾙﾄ & ﾜｯｼｬ	2	
15	22N58-34501		RUBBER	ﾗﾊﾞｰ	4	
16	22N58-34601		COLLAR	ｶﾗｰ	4	
17	214A0-82831		BOLT	ﾎﾞﾙﾄ	4	
18	23678-06002		PLATE,NAME	ﾌﾟﾚｰﾄ	1	
19	22N98-30411		MAST,INNER VM200	ｲﾝﾅﾏｽﾄ	1	
-	22N98-30421		MAST,INNER VM225	ｲﾝﾅﾏｽﾄ	1	
-	22N98-30431		MAST,INNER VM250	ｲﾝﾅﾏｽﾄ	1	
-	22N98-30441		MAST,INNER VM270	ｲﾝﾅﾏｽﾄ	1	
-	22N98-30451		MAST,INNER VM275	ｲﾝﾅﾏｽﾄ	1	
-	22N98-30401		MAST,INNER VM300	ｲﾝﾅﾏｽﾄ	1	
-	22N98-30461		MAST,INNER VM325	ｲﾝﾅﾏｽﾄ	1	
-	22N98-30471		MAST,INNER VM330	ｲﾝﾅﾏｽﾄ	1	
-	22N98-30481		MAST,INNER VM350	ｲﾝﾅﾏｽﾄ	1	
-	22N98-30491		MAST,INNER VM366	ｲﾝﾅﾏｽﾄ	1	
-	22N98-30501		MAST,INNER VM370	ｲﾝﾅﾏｽﾄ	1	
-	22N98-30511		MAST,INNER VM375	ｲﾝﾅﾏｽﾄ	1	
-	22N98-30521		MAST,INNER VM400	ｲﾝﾅﾏｽﾄ	1	
-	22N98-30531		MAST,INNER VM425	ｲﾝﾅﾏｽﾄ	1	

FIG.199 MAST [VM2N9]

(M7028320) マスト

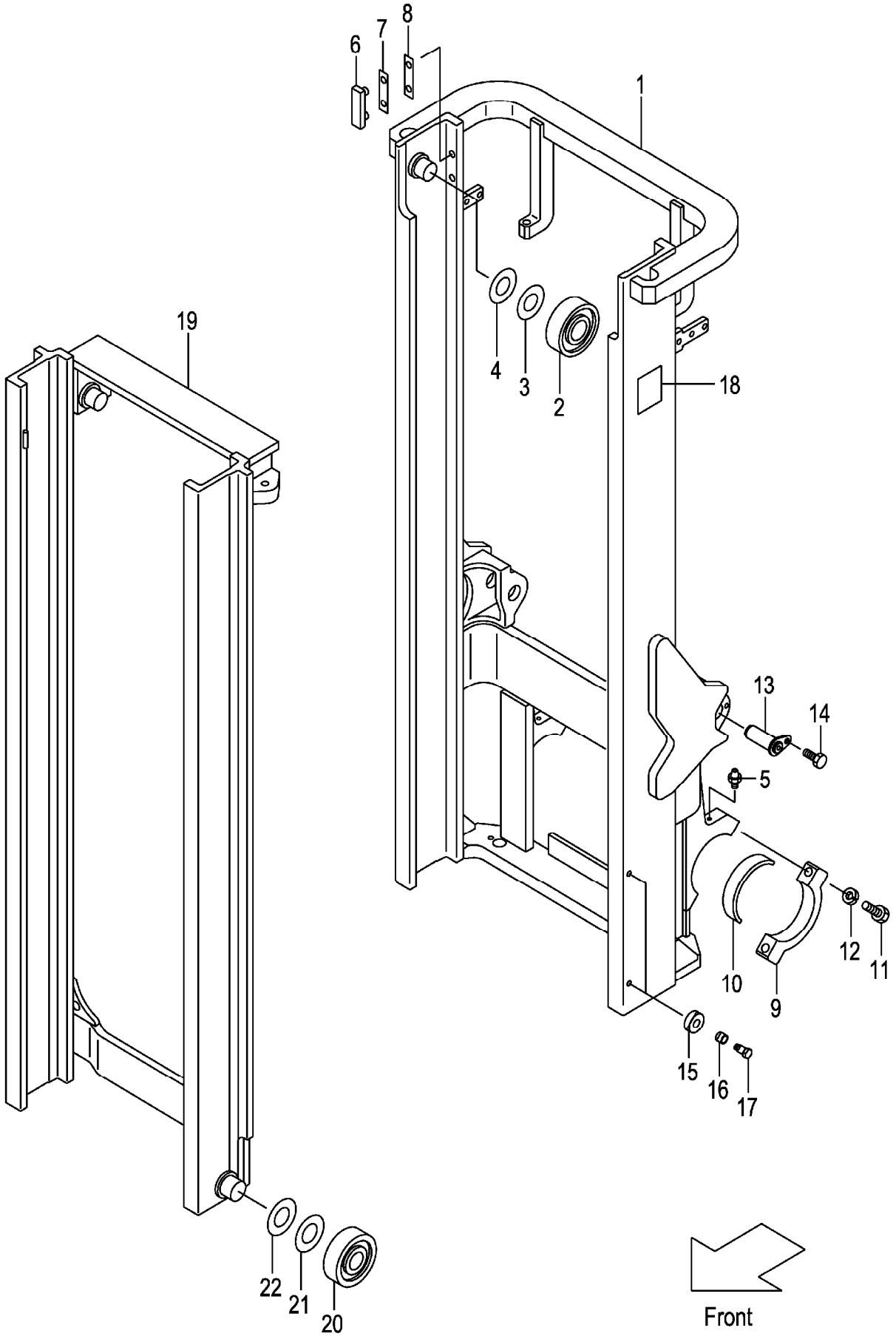

A:VM2N9(3T)

Item No	Part No.	Mark	Description		Req'd	Remarks : Serial No.
-	22N98-30541		MAST,INNER VM450	ｲﾝﾅﾏｽﾄ	1	
-	22N98-30551		MAST,INNER VM475	ｲﾝﾅﾏｽﾄ	1	
-	22N98-30561		MAST,INNER VM500	ｲﾝﾅﾏｽﾄ	1	
-	22N98-30571		MAST,INNER VM550	ｲﾝﾅﾏｽﾄ	1	
-	22N98-30581		MAST,INNER VM600	ｲﾝﾅﾏｽﾄ	1	
20	277P8-22051		ROLLER,END,119.0	ﾛｰﾗ	2	
-	277P8-22061		ROLLER,END,119.5	ﾛｰﾗ	(2)	
21	277P8-22071		SHIM,T-0.5	ｼﾑ	12	
22	277P8-22081		SHIM,T-1.0	ｼﾑ	12	

M E M O

M E M O

FIG.200 LIFT CYLINDER [VM2N9]

(M7028430) ﾘﾌﾄｼﾘﾝﾀﾞ

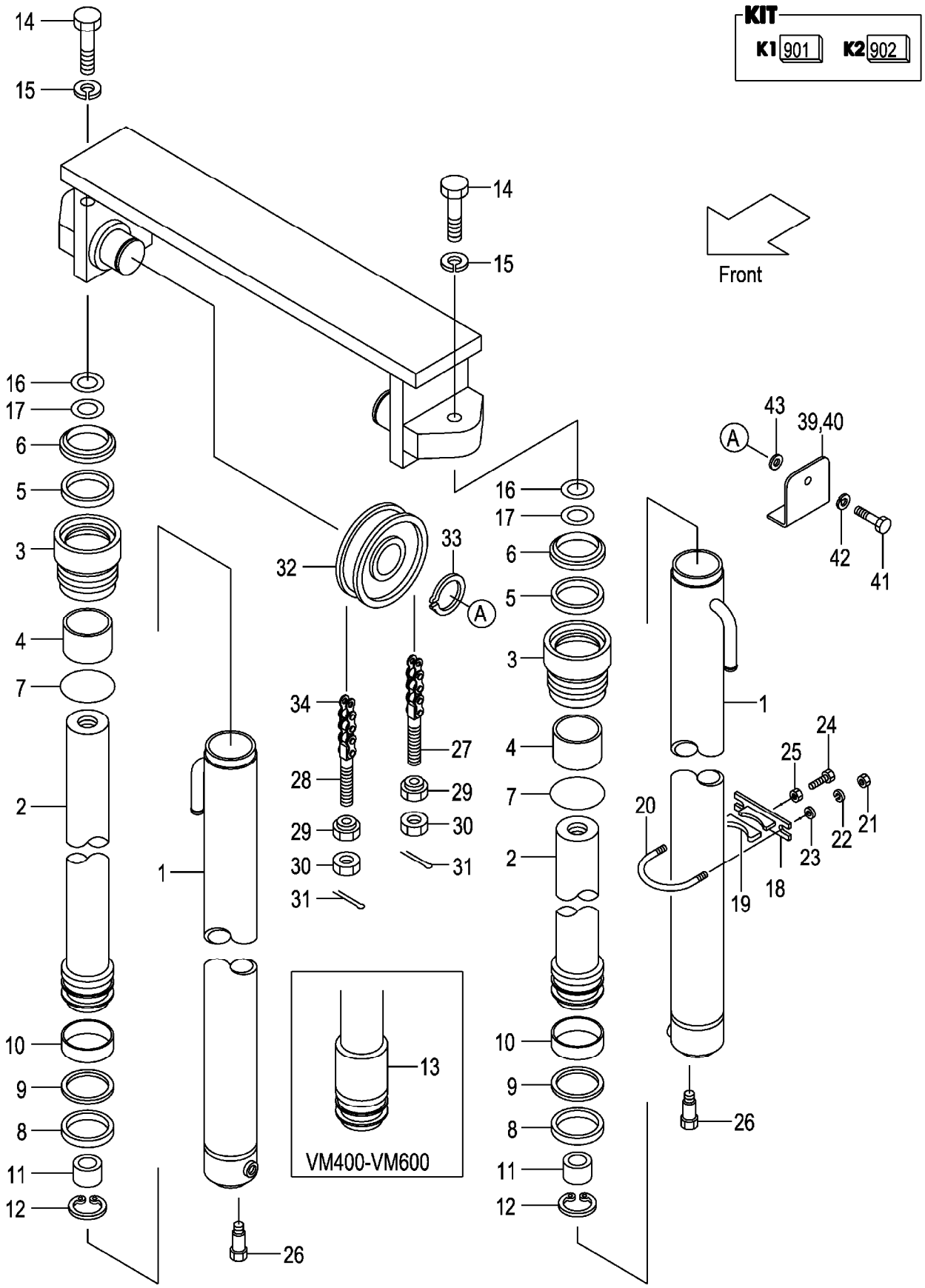

A:VM2N9(3T)

Item No	Part No.	Mark	Description		Req'd	Remarks : Serial No.
A1	22N98-40211		CYL-ASSY,LIFT VM200	ﾘﾌﾄｼﾘﾝﾀﾞｱｯｾﾝ	2	INC.1-12
-	22N98-40221		CYL-ASSY,LIFT VM225	ﾘﾌﾄｼﾘﾝﾀﾞｱｯｾﾝ	2	INC.1-12
-	22N98-40231		CYL-ASSY,LIFT VM250	ﾘﾌﾄｼﾘﾝﾀﾞｱｯｾﾝ	2	INC.1-12
-	22N98-40241		CYL-ASSY,LIFT VM270	ﾘﾌﾄｼﾘﾝﾀﾞｱｯｾﾝ	2	INC.1-12
-	22N98-40251		CYL-ASSY,LIFT VM275	ﾘﾌﾄｼﾘﾝﾀﾞｱｯｾﾝ	2	INC.1-12
-	22N98-40201		CYL-ASSY,LIFT VM300	ﾘﾌﾄｼﾘﾝﾀﾞｱｯｾﾝ	2	INC.1-12
-	22N98-40261		CYL-ASSY,LIFT VM325	ﾘﾌﾄｼﾘﾝﾀﾞｱｯｾﾝ	2	INC.1-12
-	22N98-40271		CYL-ASSY,LIFT VM330	ﾘﾌﾄｼﾘﾝﾀﾞｱｯｾﾝ	2	INC.1-12
-	22N98-40281		CYL-ASSY,LIFT VM350	ﾘﾌﾄｼﾘﾝﾀﾞｱｯｾﾝ	2	INC.1-12
-	22N98-40291		CYL-ASSY,LIFT VM366	ﾘﾌﾄｼﾘﾝﾀﾞｱｯｾﾝ	2	INC.1-12
-	22N98-40301		CYL-ASSY,LIFT VM370	ﾘﾌﾄｼﾘﾝﾀﾞｱｯｾﾝ	2	INC.1-12
-	22N98-40311		CYL-ASSY,LIFT VM375	ﾘﾌﾄｼﾘﾝﾀﾞｱｯｾﾝ	2	INC.1-12
-	22N98-40321		CYL-ASSY,LIFT VM400	ﾘﾌﾄｼﾘﾝﾀﾞｱｯｾﾝ	2	INC.1-13
-	22N98-40331		CYL-ASSY,LIFT VM425	ﾘﾌﾄｼﾘﾝﾀﾞｱｯｾﾝ	2	INC.1-13
-	22N98-40341		CYL-ASSY,LIFT VM450	ﾘﾌﾄｼﾘﾝﾀﾞｱｯｾﾝ	2	INC.1-13
-	22N98-40351		CYL-ASSY,LIFT VM475	ﾘﾌﾄｼﾘﾝﾀﾞｱｯｾﾝ	2	INC.1-13
-	22N98-40361		CYL-ASSY,LIFT VM500	ﾘﾌﾄｼﾘﾝﾀﾞｱｯｾﾝ	2	INC.1-13
-	22N98-40371		CYL-ASSY,LIFT VM550	ﾘﾌﾄｼﾘﾝﾀﾞｱｯｾﾝ	2	INC.1-13
-	22N98-40381		CYL-ASSY,LIFT VM600	ﾘﾌﾄｼﾘﾝﾀﾞｱｯｾﾝ	2	INC.1-13
901	B-3055B-00097	K1	KIT,CAP,CYL	ｷｬｯﾌﾟｷｯﾄ	2	INC.3,4
902	B-3055A-00058	K2	KIT,REPAIR	ﾘﾍﾟｱｷｯﾄ	2	INC.5-9
1	NO PART NO.	#	BODY,CYL	ﾎﾞﾃﾞｨ	2	(VM200-600)
2	NO PART NO.	#	ROD,PISTON	ﾛｯﾄﾞ	2	(VM200-600)
3	B-30121-55043	*	CAP	ｷｬｯﾌﾟ	2	
4	B-30131-45017	*	BUSHING	ﾌﾞｯｼﾝｸﾞ	2	
5	B-30961-04512	*	U-RING	Uﾘﾝｸﾞ	2	
6	B-30191-45025	*	WIPER	ﾜｲﾊﾟ	2	
7	B-30161-91775	*	O-RING	Oﾘﾝｸﾞ	2	
8	B-30161-55046	*	U-RING	Uﾘﾝｸﾞ	2	
9	B-30461-55039	*	RING,BACK-UP	ﾘﾝｸﾞ	2	
10	B-30131-55018		BUSHING	ﾌﾞｯｼﾝｸﾞ	2	
11	B-B6551-91018		RING	ﾘﾝｸﾞ	2	
12	B-30141-91048		RING,SNAP	ｽﾅｯﾌﾟﾘﾝｸﾞ	2	
13	B-30296-72103		SPACER	ｽﾍﾟｰｻ	2	(VM400-500)
-	B-B6111-45078		SPACER	ｽﾍﾟｰｻ	2	(VM550-600)
14	01103-14040		BOLT	ﾎﾞﾙﾄ	2	
15	02011-00014		WASHER	ﾜｯｼｬ	2	
16	22517-40051		SHIM,T-1.0	ｼﾑ	4	
17	22717-40081		SHIM,T-0.5	ｼﾑ	4	
18	22N58-43011		SUPPORT	ｻﾎﾟｰﾄ	2	
19	24868-42111		RUBBER	ﾗﾊﾞｰ	2	
20	234A8-42551		U-BOLT	Uﾎﾞﾙﾄ	2	
21	01400-00010		NUT	ﾅｯﾄ	4	
22	02010-20010		WASHER	ﾜｯｼｬ	4	
23	02000-20010		WASHER	ﾜｯｼｬ	4	
24	01120-12040		BOLT	ﾎﾞﾙﾄ	2	
25	01400-00012		NUT	ﾅｯﾄ	2	
26	214A8-42661		BOLT	ﾎﾞﾙﾄ	2	
27	215K0-82701		PIN,ANCHOR	ﾋﾟﾝ	2	
28	24459-42391		PIN,ANCHOR	ﾋﾟﾝ	2	

FIG.200 LIFT CYLINDER [VM2N9]

(M7028430) ﾘﾌﾄｼﾘﾝﾀﾞ

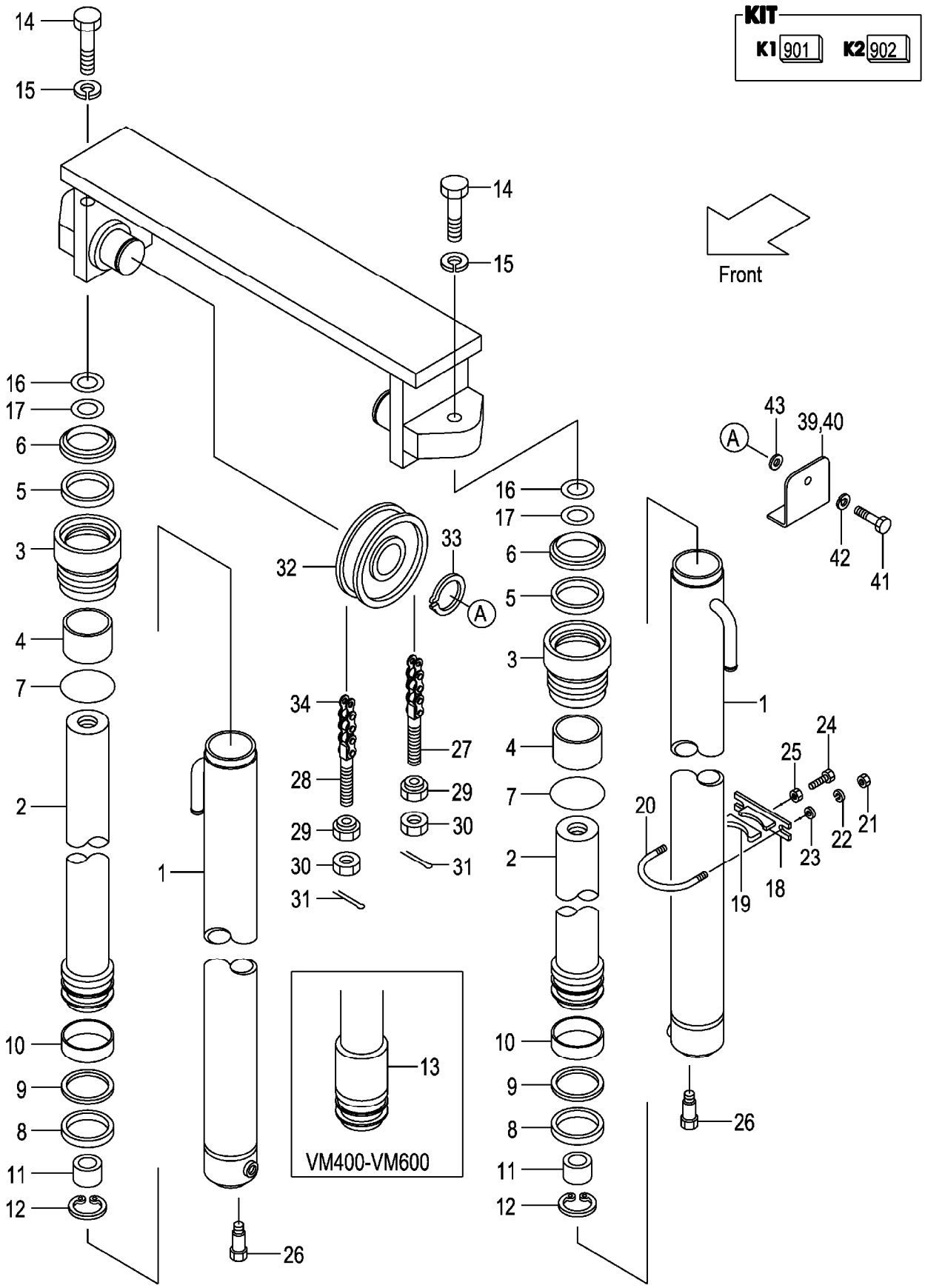

A:VM2N9(3T)

Item No	Part No.	Mark	Description		Req'd	Remarks : Serial No.
29	22218-40191		NUT	ﾅｯﾄ	4	
30	01400-00018		NUT	ﾅｯﾄ	4	
31	02200-03040		PIN	ﾋﾟﾝ	4	
32	234A8-43501		SHEAVE	ｼｰﾌﾞ	2	
33	02100-00040		RING,SNAP	ｽﾅｯﾌﾟﾘﾝｸﾞ	2	
34	22438-45551		CHAIN VM200	ﾁｪｰﾝ	2	
-	22438-45591		CHAIN VM225	ﾁｪｰﾝ	2	
-	22438-45651		CHAIN VM250	ﾁｪｰﾝ	2	
-	22438-45691		CHAIN VM270	ﾁｪｰﾝ	2	
-	22438-45691		CHAIN VM275	ﾁｪｰﾝ	2	
-	22438-45751		CHAIN VM300	ﾁｪｰﾝ	2	
-	22438-45791		CHAIN VM325	ﾁｪｰﾝ	2	
-	22438-45811		CHAIN VM330	ﾁｪｰﾝ	2	
-	22438-45851		CHAIN VM350	ﾁｪｰﾝ	2	
-	22438-45871		CHAIN VM366	ﾁｪｰﾝ	2	
-	22438-45891		CHAIN VM370	ﾁｪｰﾝ	2	
-	22438-45891		CHAIN VM375	ﾁｪｰﾝ	2	
-	22438-45971		CHAIN VM400	ﾁｪｰﾝ	2	
-	22438-46011		CHAIN VM425	ﾁｪｰﾝ	2	
-	22438-46071		CHAIN VM450	ﾁｪｰﾝ	2	
-	22438-46111		CHAIN VM475	ﾁｪｰﾝ	2	
-	22438-46151		CHAIN VM500	ﾁｪｰﾝ	2	
-	22438-46271		CHAIN VM550	ﾁｪｰﾝ	2	
-	22438-46371		CHAIN VM600	ﾁｪｰﾝ	2	

M E M O

M E M O

FIG.201 MAST PIPING [VM2N9]

(M7028440) マストパイピング

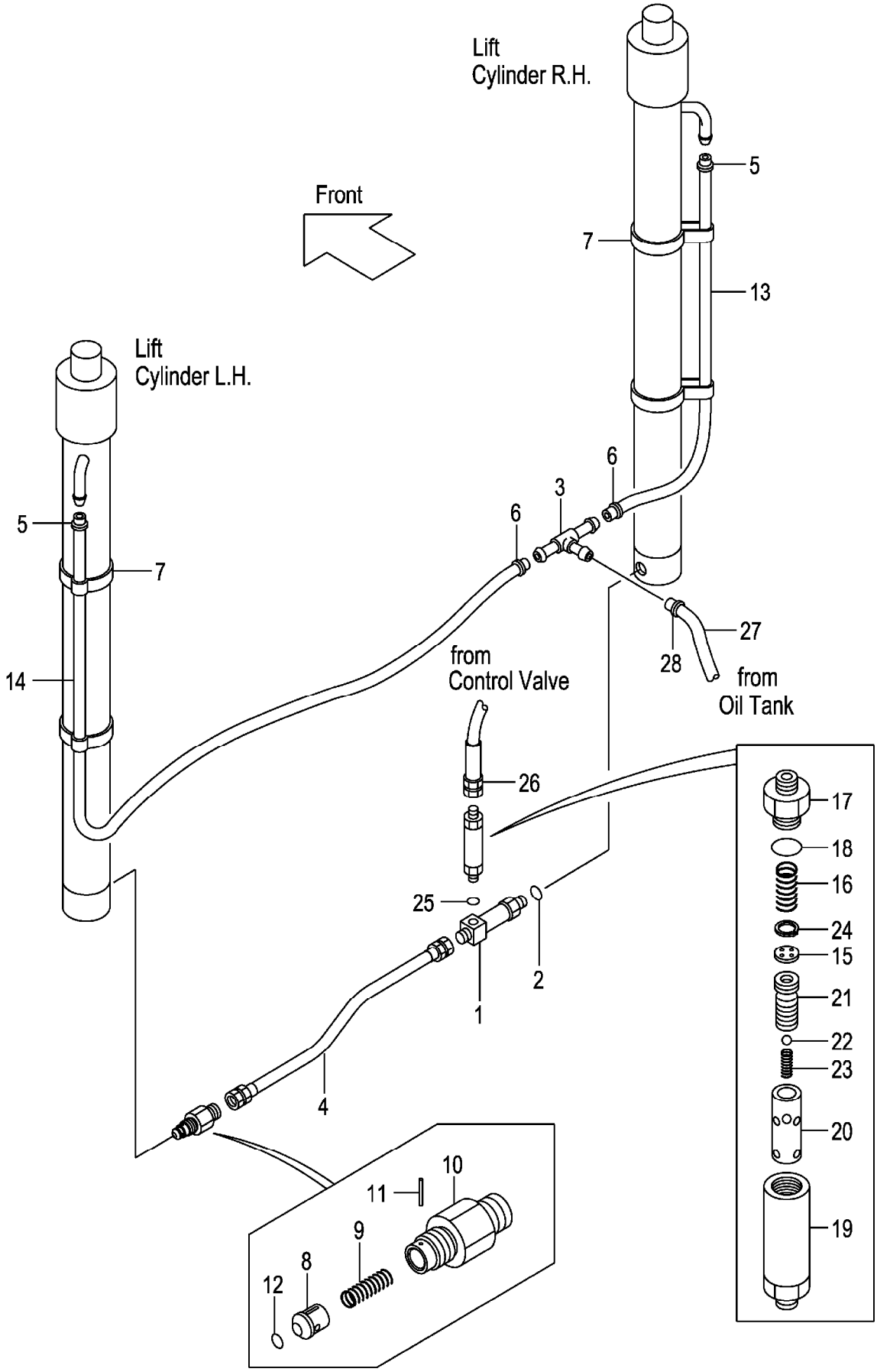

A:VM2N9(3T)

Item No	Part No.	Mark	Description		Req'd	Remarks : Serial No.
A1	234A8-41101		THREE-WAY-ASSY	ｽﾘｰｳｪｲｱｯｾﾝ	1	INC.1,2
1	NO PART NO.	#	THREE-WAY	ｽﾘｰｳｪｲ	1	
2	03320-00140		O-RING	Oﾘﾝｸﾞ	1	
3	53675-55051		THREE-WAY	ｽﾘｰｳｪｲ	1	
4	234A8-02201		HOSE	ﾎｰｽ	1	
5	24329-46201		CLIP	ｸﾘｯﾌﾟ	2	
6	04911-00021		CLIP	ｸﾘｯﾌﾟ	2	
7	22N58-45001		BAND	ﾊﾞﾝﾄﾞ	4	
A2	234A8-40701		VALVE-ASSY,CUT	ｶｯﾄﾊﾞﾙﾌﾞｱｯｾﾝ	1	INC.8-12
8	234A8-42602		PISTON	ﾋﾟｽﾄﾝ	1	
9	234A8-42611		SPRING	ｽﾌﾟﾘﾝｸﾞ	1	
10	234A8-42622		NIPPLE	ﾆｯﾌﾟﾙ	1	
11	02270-01014		PIN	ﾋﾟﾝ	1	
12	03320-00140		O-RING	Oﾘﾝｸﾞ	1	
13	04710-04110		HOSE VM200	ﾎｰｽ	1	
-	04710-04120		HOSE VM225	ﾎｰｽ	1	
-	04710-04135		HOSE VM250	ﾎｰｽ	1	
-	04710-04145		HOSE VM270	ﾎｰｽ	1	
-	04710-04145		HOSE VM275	ﾎｰｽ	1	
-	04710-04160		HOSE VM300	ﾎｰｽ	1	
-	04710-04170		HOSE VM325	ﾎｰｽ	1	
-	04710-04175		HOSE VM330	ﾎｰｽ	1	
-	04710-04185		HOSE VM350	ﾎｰｽ	1	
-	04710-04195		HOSE VM366	ﾎｰｽ	1	
-	04710-04195		HOSE VM370	ﾎｰｽ	1	
-	04710-04195		HOSE VM375	ﾎｰｽ	1	
-	04710-04215		HOSE VM400	ﾎｰｽ	1	
-	04710-04225		HOSE VM425	ﾎｰｽ	1	
-	04710-04240		HOSE VM450	ﾎｰｽ	1	
-	04710-04250		HOSE VM475	ﾎｰｽ	1	
-	04710-04265		HOSE VM500	ﾎｰｽ	1	
-	04710-04295		HOSE VM550	ﾎｰｽ	1	
-	04710-04320		HOSE VM600	ﾎｰｽ	1	
14	04710-04145		HOSE VM200	ﾎｰｽ	1	
-	04710-04165		HOSE VM225	ﾎｰｽ	1	
-	04710-04170		HOSE VM250	ﾎｰｽ	1	
-	04710-04180		HOSE VM270	ﾎｰｽ	1	
-	04710-04180		HOSE VM275	ﾎｰｽ	1	
-	04710-04190		HOSE VM300	ﾎｰｽ	1	
-	04710-04205		HOSE VM325	ﾎｰｽ	1	
-	04710-04210		HOSE VM330	ﾎｰｽ	1	
-	04710-04220		HOSE VM350	ﾎｰｽ	1	
-	04710-04230		HOSE VM366	ﾎｰｽ	1	
-	04710-04230		HOSE VM370	ﾎｰｽ	1	
-	04710-04230		HOSE VM375	ﾎｰｽ	1	
-	04710-04250		HOSE VM400	ﾎｰｽ	1	
-	04710-04260		HOSE VM425	ﾎｰｽ	1	
-	04710-04275		HOSE VM450	ﾎｰｽ	1	
-	04710-04285		HOSE VM475	ﾎｰｽ	1	
-	04710-04300		HOSE VM500	ﾎｰｽ	1	

FIG.201 MAST PIPING [VM2N9]

(M7028440) マストパイピング

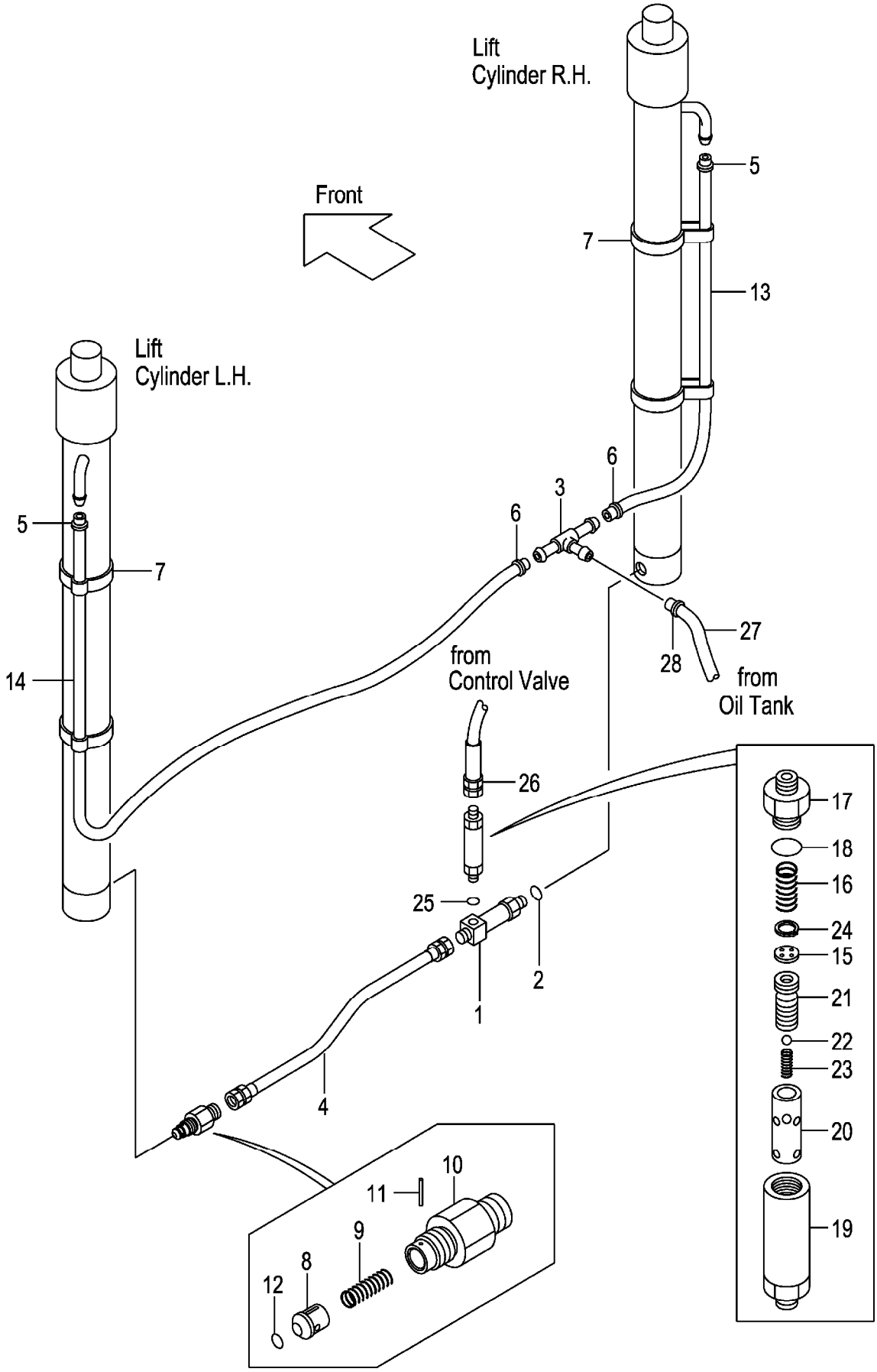

A:VM2N9(3T)

Item No	Part No.	Mark	Description		Req'd	Remarks : Serial No.
-	04710-04330		HOSE VM550	ﾎｰｽ	1	
-	04710-04355		HOSE VM600	ﾎｰｽ	1	
A3	234F8-41001		REGULATOR-ASSY	ﾚｷﾞｭﾚｰﾀｱｯｾﾝ	1	INC.15-24
15	NO PART NO.	#	PLATE	ﾌﾟﾚｰﾄ	1	
16	27979-43101		SPRING	ｽﾌﾟﾘﾝｸﾞ	1	
17	NO PART NO.	#	NIPPLE	ﾆｯﾌﾟﾙ	1	
18	03320-00280		O-RING	Oﾘﾝｸﾞ	1	
19	NO PART NO.	#	CASE	ｹｰｽ	1	
20	NO PART NO.	#	SLEEVE	ｽﾘｰﾌﾞ	1	
21	NO PART NO.	#	PISTON	ﾋﾟｽﾄﾝ	1	
22	24459-42951		BALL,NYLON	ﾎﾞｰﾙ	1	
23	214A8-44151		SPRING	ｽﾌﾟﾘﾝｸﾞ	1	
24	02110-00018		RING,SNAP	ｽﾅｯﾌﾟﾘﾝｸﾞ	1	
25	03320-00180		O-RING	Oﾘﾝｸﾞ	1	
26	277N0-82021		HOSE	ﾎｰｽ	1	
27	04710-04130		HOSE	ﾎｰｽ	1	
28	04911-00021		CLIP	ｸﾘｯﾌﾟ	2	

M E M O

M E M O

FIG.202 FORK [VFM2N9]

(M7028150) フォーク

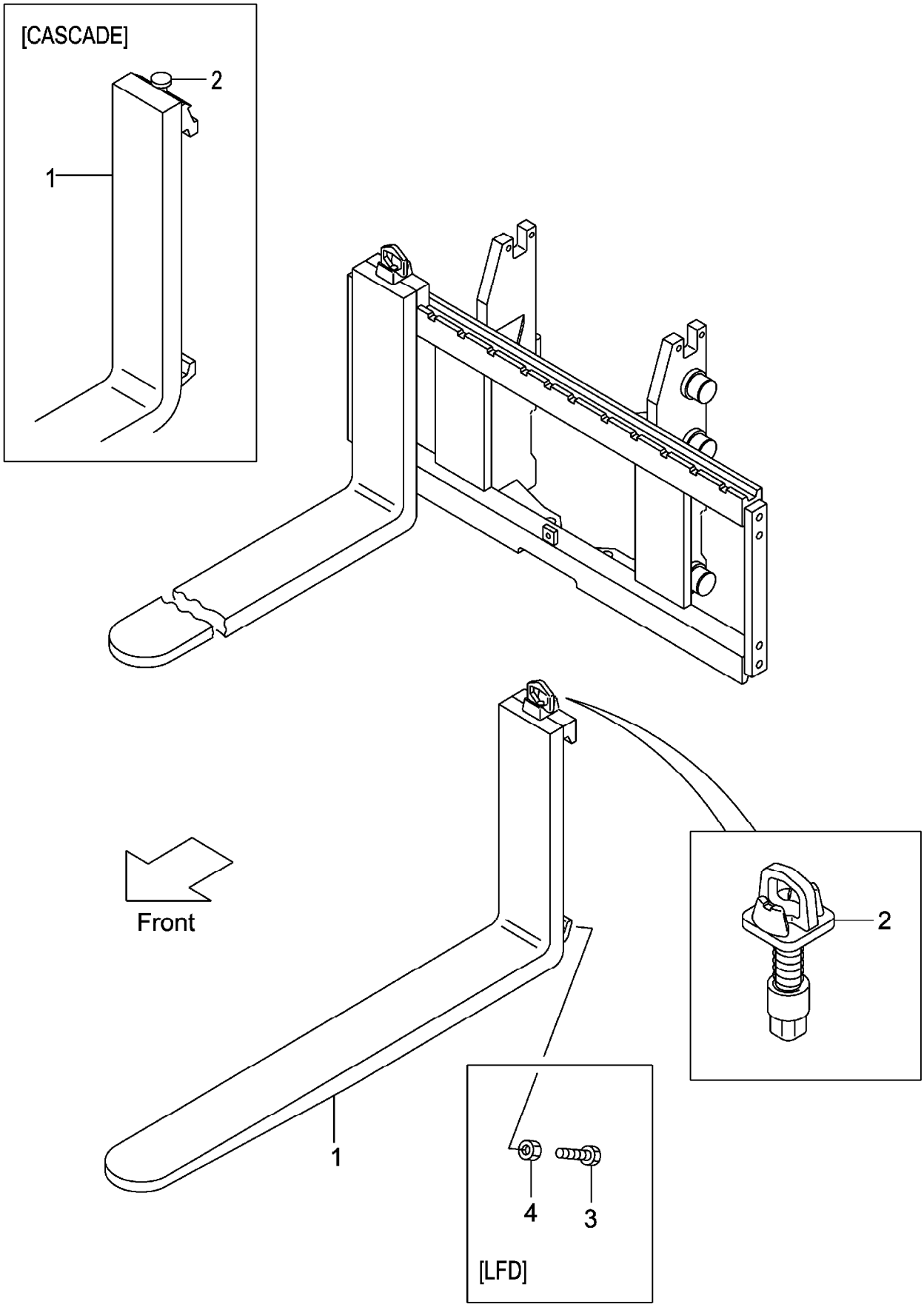

A:VFM2N9(3T)

Item No	Part No.	Mark	Description		Req'd	Remarks : Serial No.
1	214J8-10501		FORK	ﾌｫｰｸ	2	(L=1070) INC.2
-	214J8-10581		FORK	ﾌｫｰｸ	2	[LF100] INC.2
-	214J8-10501		FORK	ﾌｫｰｸ	2	[LF107] INC.2
-	214J8-10591		FORK	ﾌｫｰｸ	2	[LF110] INC.2
-	214J8-10601		FORK	ﾌｫｰｸ	2	[LF120] INC.2
-	214J8-10511		FORK	ﾌｫｰｸ	2	[LF122] INC.2
-	214J8-10611		FORK	ﾌｫｰｸ	2	[LF130] INC.2
-	214J8-10521		FORK	ﾌｫｰｸ	2	[LF137] INC.2
-	214J8-10621		FORK	ﾌｫｰｸ	2	[LF140] INC.2
-	214J8-10631		FORK	ﾌｫｰｸ	2	[LF150] INC.2
-	214J8-10531		FORK	ﾌｫｰｸ	2	[LF152] INC.2
-	214J8-10641		FORK	ﾌｫｰｸ	2	[LF160] INC.2
-	214J8-10541		FORK	ﾌｫｰｸ	2	[LF167] INC.2
-	214J8-10651		FORK	ﾌｫｰｸ	2	[LF170] INC.2
-	214J8-10661		FORK	ﾌｫｰｸ	2	[LF180] INC.2
-	214J8-10551		FORK	ﾌｫｰｸ	2	[LF182] INC.2
-	214J8-10671		FORK	ﾌｫｰｸ	2	[LF190] INC.2
-	214J8-10561		FORK	ﾌｫｰｸ	2	[LF197] INC.2
-	214J8-10681		FORK	ﾌｫｰｸ	2	[LF200] INC.2
-	214J8-10571		FORK	ﾌｫｰｸ	2	[LF212] INC.2
-	234F8-10581		FORK	ﾌｫｰｸ	2	[LFD100] INC.2
-	234F8-10501		FORK	ﾌｫｰｸ	2	[LFD107] INC.2
-	234F8-10591		FORK	ﾌｫｰｸ	2	[LFD110] INC.2
-	234F8-10601		FORK	ﾌｫｰｸ	2	[LFD120] INC.2
-	234F8-10511		FORK	ﾌｫｰｸ	2	[LFD122] INC.2
-	234F8-10611		FORK	ﾌｫｰｸ	2	[LFD130] INC.2
-	234F8-10521		FORK	ﾌｫｰｸ	2	[LFD137] INC.2
-	234F8-10621		FORK	ﾌｫｰｸ	2	[LFD140] INC.2
-	234F8-10631		FORK	ﾌｫｰｸ	2	[LFD150] INC.2
-	234F8-10531		FORK	ﾌｫｰｸ	2	[LFD152] INC.2
-	234F8-10641		FORK	ﾌｫｰｸ	2	[LFD160] INC.2
-	234F8-10541		FORK	ﾌｫｰｸ	2	[LFD167] INC.2
-	234F8-10651		FORK	ﾌｫｰｸ	2	[LFD170] INC.2
-	234F8-10661		FORK	ﾌｫｰｸ	2	[LFD180] INC.2
-	234F8-10551		FORK	ﾌｫｰｸ	2	[LFD182] INC.2
-	234F8-10671		FORK	ﾌｫｰｸ	2	[LFD190] INC.2
-	234F8-10561		FORK	ﾌｫｰｸ	2	[LFD197] INC.2
-	234F8-10681		FORK	ﾌｫｰｸ	2	[LFD200] INC.2
-	234F8-10571		FORK	ﾌｫｰｸ	2	[LFD212] INC.2
-	22N98-10501		FORK	ﾌｫｰｸ	2	[LF107/CASCADE] INC.2
-	22N98-10511		FORK	ﾌｫｰｸ	2	[LF122/CASCADE] INC.2
2	214J8-11002		STOPPER,FORK	ｽﾄｯﾊﾟ	2	
-	W-K3PK-M		KIT,PIN,STOPPER	ｽﾄｯﾊﾟｷｯﾄ	2	[CASCADE]
3	234F8-12101		BOLT	ﾎﾞﾙﾄ	4	[LFD]
4	01402-00010		NUT	ﾅｯﾄ	4	[LFD]

FIG.203 LIFT BRACKET [VFM2N9]

(M7020620) ﾘﾌﾄﾌﾞﾗｹｯﾄ

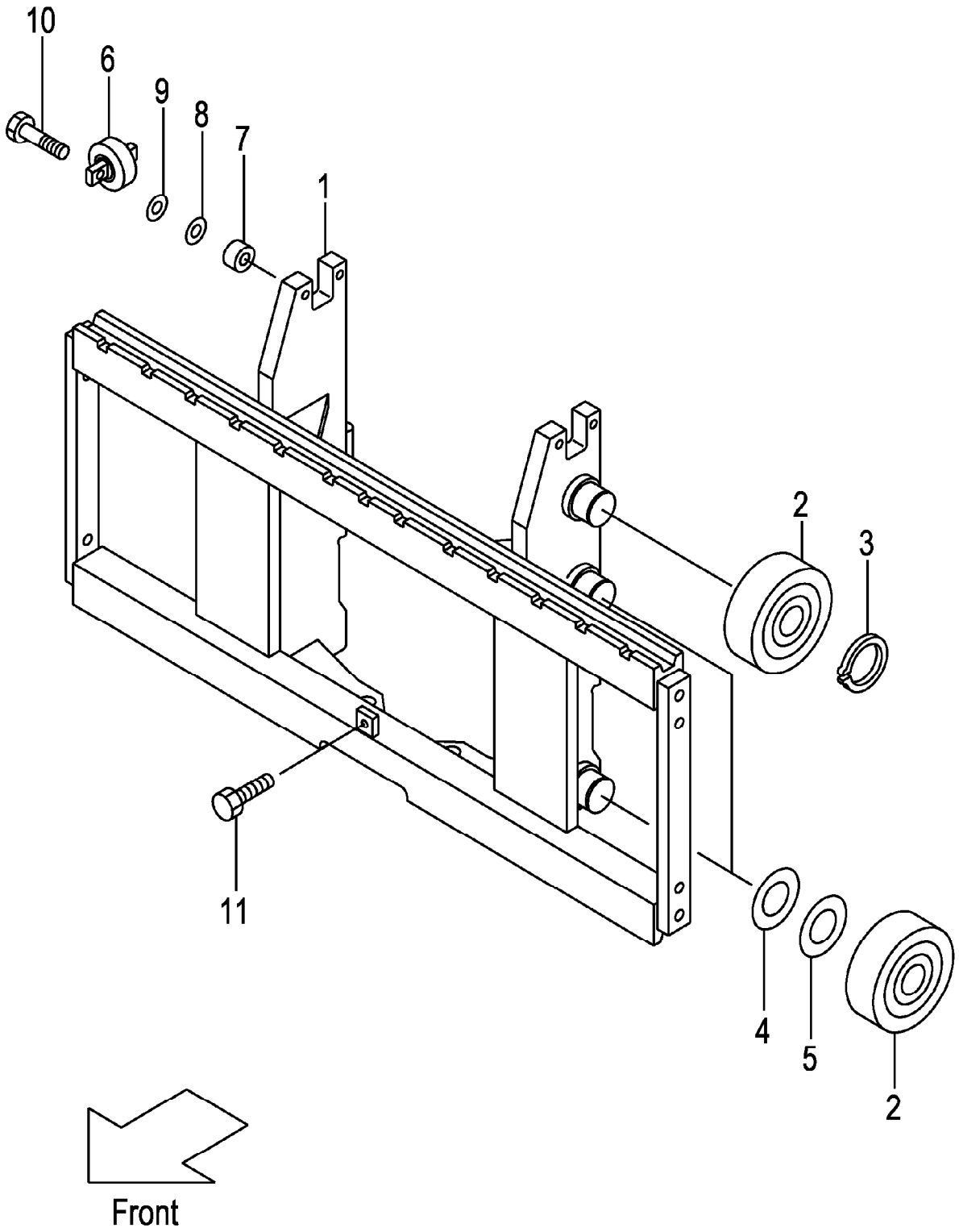

A:VFM2N9(3T)

Item No	Part No.	Mark	Description		Req'd	Remarks : Serial No.
1	22N90-60201		BRACKET,LIFT	ﾌﾞﾗｹｯﾄ	1	
-	52N91-61201		BRACKET,LIFT	ﾌﾞﾗｹｯﾄ	1	[WFX110][WFX114][WFX127] [WFX135][WFX138]
-	52N91-61211		BRACKET,LIFT	ﾌﾞﾗｹｯﾄ	1	[WFX135][WFX138][WFX145] [WFX146][WFX154][WFX180]
2	277P8-22051		ROLLER,END,119.0	ﾛｰﾗ	6	
-	577P3-74001		ROLLER,END,119.0	ﾛｰﾗ	6	[FC][CS35][FCS35][FCS45] [FCS55]
-	277P8-22061		ROLLER,END,119.5	ﾛｰﾗ	(6)	
-	577P3-74011		ROLLER,END,119.5	ﾛｰﾗ	(6)	[FC][CS35][FCS35][FCS45] [FCS55]
3	02100-00045		RING,SNAP	ｽﾅｯﾌﾟﾘﾝｸﾞ	2	
4	277P8-22071		SHIM,T-0.5	ｼﾑ	5	
5	277P8-22081		SHIM,T-1.0	ｼﾑ	5	
6	22N58-32701		ROLLER,SIDE	ﾛｰﾗ	2	
-	52N53-74001		ROLLER,SIDE	ﾛｰﾗ	2	[CS][FC][CS35][FCS35][FCS45] [FCS55]
7	22N58-32711		SPACER	ｽﾍﾟｰｻ	4	
8	22018-30261		SHIM,T-0.5	ｼﾑ	5	
9	22018-30121		SHIM,T-1.0	ｼﾑ	5	
10	01103-10045		BOLT	ﾎﾞﾙﾄ	4	
11	01184-12025		BOLT	ﾎﾞﾙﾄ	1	

FIG.204 BACKREST [VFM2N9]

(M7028260) ﾊﾞｯｸﾚｽﾄ

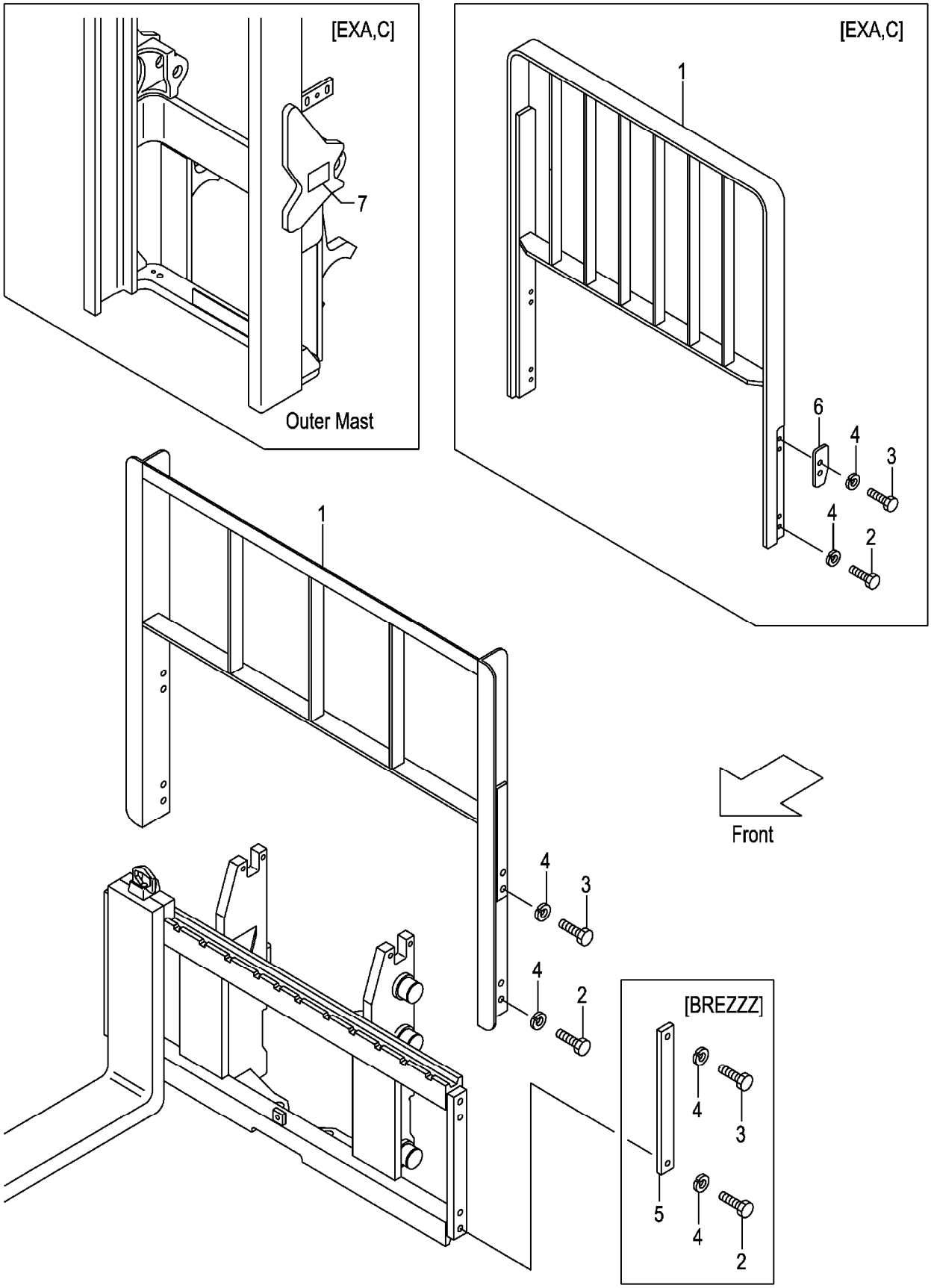

A:VFM2N9(3T)

Item No	Part No.	Mark	Description		Req'd	Remarks : Serial No.
1	234F8-22201		BACKREST	ﾊﾞｯｸﾚｽﾄ	1	
-	234F8-22101		BACKREST	ﾊﾞｯｸﾚｽﾄ	1	[HBR130]
-	234F8-22111		BACKREST	ﾊﾞｯｸﾚｽﾄ	1	[HBR140]
-	234F8-22121		BACKREST	ﾊﾞｯｸﾚｽﾄ	1	[HBR150]
-	534F1-64401		BACKREST	ﾊﾞｯｸﾚｽﾄ	1	[WFX138][EXA/WFX138] [EXC/WFX138]
-	534F1-64411		BACKREST	ﾊﾞｯｸﾚｽﾄ	1	[WFX154][EXA/WFX154] [EXC/WFX154]
-	534F2-74001		BACKREST	ﾊﾞｯｸﾚｽﾄ	1	[EXA][EXC]
2	01100-14025		BOLT	ﾎﾞﾙﾄ	4	
-	01100-14030		BOLT	ﾎﾞﾙﾄ	4	[HBR]
-	01100-14025		BOLT	ﾎﾞﾙﾄ	4	[EXA][EXC]
-	01100-14025		BOLT	ﾎﾞﾙﾄ	2	[BREZZZ]
3	01100-14030		BOLT	ﾎﾞﾙﾄ	4	
-	01100-14030		BOLT	ﾎﾞﾙﾄ	4	[HBR]
-	01100-14035		BOLT	ﾎﾞﾙﾄ	4	[EXA][EXC]
-	01100-14025		BOLT	ﾎﾞﾙﾄ	2	[BREZZZ]
4	02010-00014		WASHER	ﾜｯｼｬ	8	
5	24450-92021		PLATE,SIDE	ﾌﾟﾚｰﾄ	2	[BREZZZ]
6	534A2-74051		PLATE,STOPPER	ﾌﾟﾚｰﾄ	2	[EXA][EXC]
7	534A2-74301		DECAL,CAUTION	ﾃﾞｶﾙ	1	[EXA][EXC]

FIG.205 MAST [VFM2N9]

(M7020430) マスト

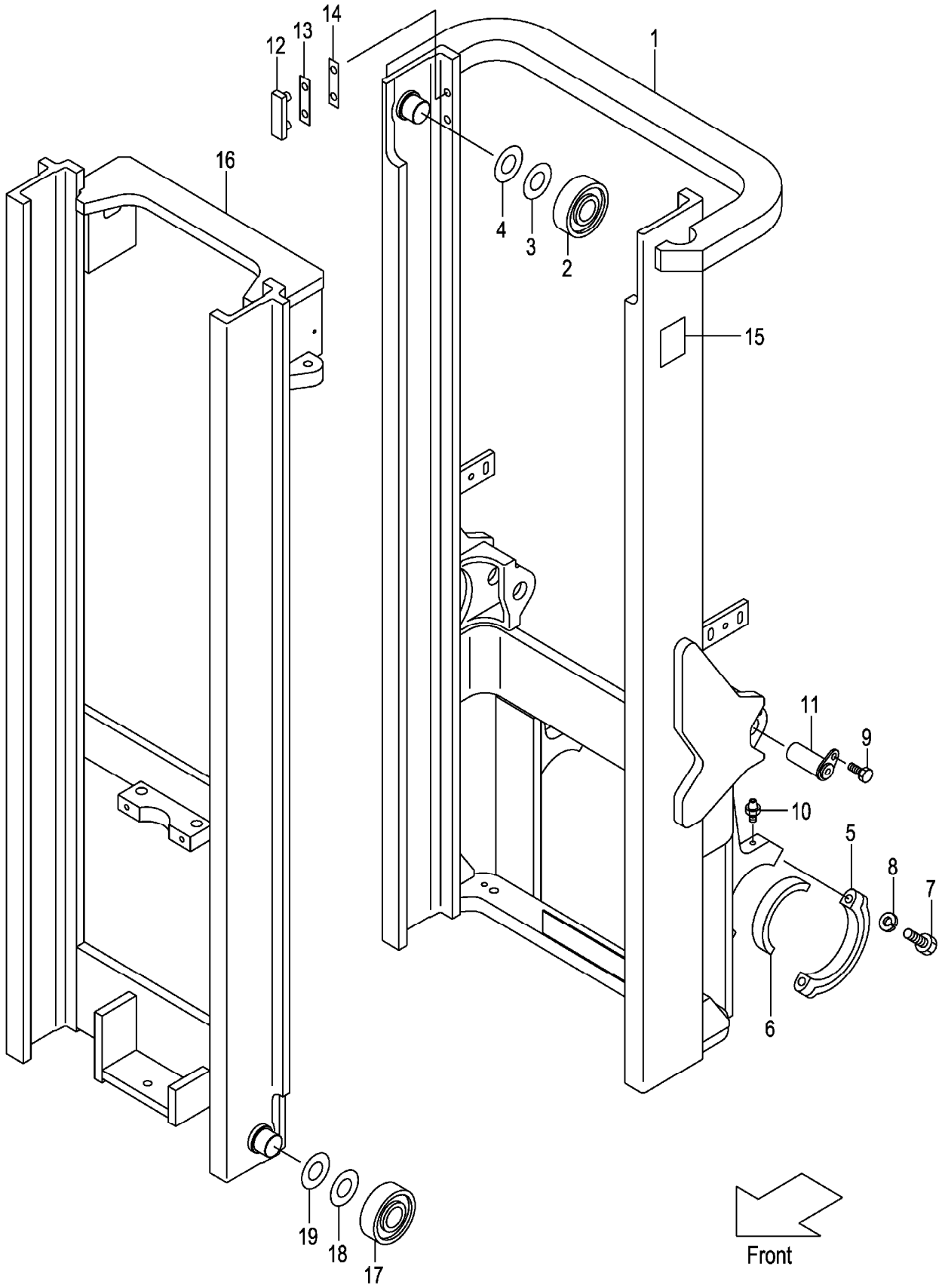

A:VFM2N9(3T)

Item No	Part No.	Mark	Description		Req'd	Remarks : Serial No.
1	22N90-40211		MAST,OUTER VFM200	ｱｳﾀﾏｽﾄ	1	
-	22N90-40221		MAST,OUTER VFM225	ｱｳﾀﾏｽﾄ	1	
-	22N90-40231		MAST,OUTER VFM250	ｱｳﾀﾏｽﾄ	1	
-	22N90-40241		MAST,OUTER VFM270	ｱｳﾀﾏｽﾄ	1	
-	22N90-40251		MAST,OUTER VFM275	ｱｳﾀﾏｽﾄ	1	
-	22N90-40201		MAST,OUTER VFM300	ｱｳﾀﾏｽﾄ	1	
-	22N90-40261		MAST,OUTER VFM325	ｱｳﾀﾏｽﾄ	1	
-	22N90-40271		MAST,OUTER VFM330	ｱｳﾀﾏｽﾄ	1	
-	22N90-40281		MAST,OUTER VFM350	ｱｳﾀﾏｽﾄ	1	
-	22N90-40291		MAST,OUTER VFM366	ｱｳﾀﾏｽﾄ	1	
-	22N90-40301		MAST,OUTER VFM370	ｱｳﾀﾏｽﾄ	1	
-	22N90-40311		MAST,OUTER VFM375	ｱｳﾀﾏｽﾄ	1	
-	22N90-40321		MAST,OUTER VFM400	ｱｳﾀﾏｽﾄ	1	
-	22N90-40331		MAST,OUTER VFM425	ｱｳﾀﾏｽﾄ	1	
-	22N90-40341		MAST,OUTER VFM450	ｱｳﾀﾏｽﾄ	1	
-	22N90-40351		MAST,OUTER VFM475	ｱｳﾀﾏｽﾄ	1	
-	22N90-40361		MAST,OUTER VFM500	ｱｳﾀﾏｽﾄ	1	
-	22N90-40371		MAST,OUTER VFM550	ｱｳﾀﾏｽﾄ	1	
-	22N90-40381		MAST,OUTER VFM600	ｱｳﾀﾏｽﾄ	1	
2	277P8-22051		ROLLER,END,119.0	ﾛｰﾗ	2	
-	577P8-74001		ROLLER,END,119.0	ﾛｰﾗ	2	[FC][CS35][FCS35][FCS45] [FCS55]
3	277P8-22071		SHIM,T-0.5	ｼﾑ	12	
4	277P8-22081		SHIM,T-1.0	ｼﾑ	12	
5	277P8-32701		CAP	ｷｬｯﾌﾟ	2	
6	214A8-02201		BUSHING	ﾌﾞｯｼﾝｸﾞ	2	
7	01103-16065		BOLT	ﾎﾞﾙﾄ	4	
8	02011-00016		WASHER	ﾜｯｼｬ	4	
9	216G8-52301		BOLT	ﾎﾞﾙﾄ	2	
10	04901-00100		FITTING	ﾌｨｯﾃｨﾝｸﾞ	2	
11	272K8-52201		PIN	ﾋﾟﾝ	2	
12	216G8-33401		SLIPPER	ｽﾘｯﾊﾟ	2	
13	216G8-33361		SHIM,T-0.5	ｼﾑ	8	
14	216G8-33371		SHIM,T-1.0	ｼﾑ	4	
15	23678-06002		PLATE,NAME	ﾌﾟﾚｰﾄ	1	
16	22N90-40411		MAST,INNER VFM200	ｲﾝﾅﾏｽﾄ	1	
-	22N90-40421		MAST,INNER VFM225	ｲﾝﾅﾏｽﾄ	1	
-	22N90-40431		MAST,INNER VFM250	ｲﾝﾅﾏｽﾄ	1	
-	22N90-40441		MAST,INNER VFM270	ｲﾝﾅﾏｽﾄ	1	
-	22N90-40451		MAST,INNER VFM275	ｲﾝﾅﾏｽﾄ	1	
-	22N90-40401		MAST,INNER VFM300	ｲﾝﾅﾏｽﾄ	1	
-	22N90-40461		MAST,INNER VFM325	ｲﾝﾅﾏｽﾄ	1	
-	22N90-40471		MAST,INNER VFM330	ｲﾝﾅﾏｽﾄ	1	
-	22N90-40481		MAST,INNER VFM350	ｲﾝﾅﾏｽﾄ	1	
-	22N90-40491		MAST,INNER VFM366	ｲﾝﾅﾏｽﾄ	1	
-	22N90-40501		MAST,INNER VFM370	ｲﾝﾅﾏｽﾄ	1	
-	22N90-40511		MAST,INNER VFM375	ｲﾝﾅﾏｽﾄ	1	
-	22N90-40521		MAST,INNER VFM400	ｲﾝﾅﾏｽﾄ	1	
-	22N90-40531		MAST,INNER VFM425	ｲﾝﾅﾏｽﾄ	1	
-	22N90-40541		MAST,INNER VFM450	ｲﾝﾅﾏｽﾄ	1	

FIG.205 MAST [VFM2N9]

(M7020430) マスト

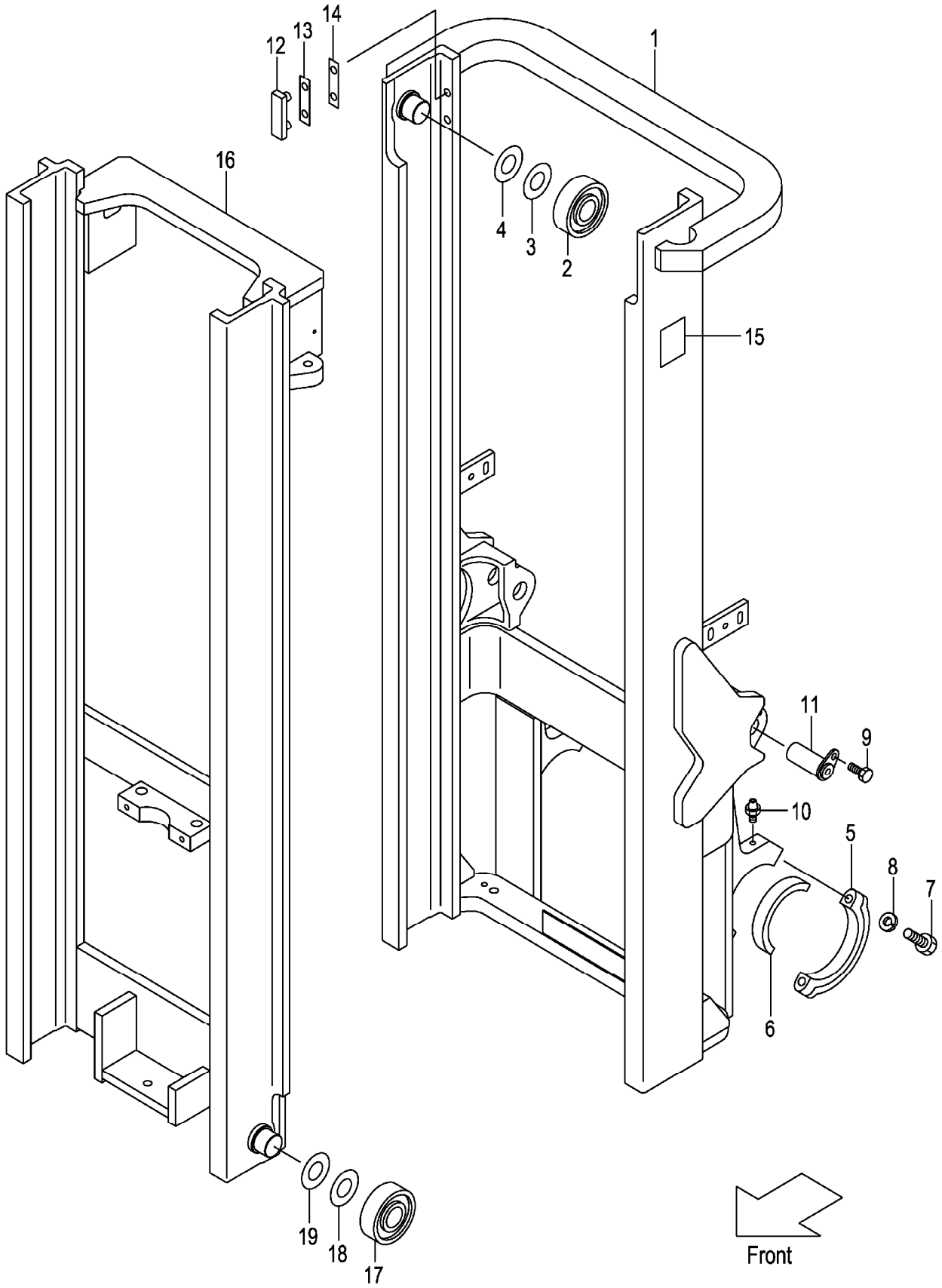

A:VFM2N9(3T)

Item No	Part No.	Mark	Description		Req'd	Remarks : Serial No.
-	22N90-40551		MAST,INNER VFM475	ｲﾝﾅﾏｽﾄ	1	
-	22N90-40561		MAST,INNER VFM500	ｲﾝﾅﾏｽﾄ	1	
-	22N90-40571		MAST,INNER VFM550	ｲﾝﾅﾏｽﾄ	1	
17	277P8-22051		ROLLER,END,119.0	ﾛｰﾗ	2	
-	277P8-22061		ROLLER,END,119.5	ﾛｰﾗ	(2)	
-	577P3-74001		ROLLER,END,119.0	ﾛｰﾗ	2	[FC][CS35][FCS35][FCS45] [FCS55]
-	577P3-74011		ROLLER,END,119.5	ﾛｰﾗ	(2)	[FC][CS35][FCS35][FCS45] [FCS55]
18	277P8-22071		SHIM,T-0.5	ｼﾑ	12	
19	277P8-22081		SHIM,T-1.0	ｼﾑ	12	

M E M O

M E M O

FIG.206 TILT GAUGE [VFM2N9/(TG,PPC,PR,PRC,MPC)]

(M7020440) ﾃｨﾙﾄｹﾞｰｼﾞ

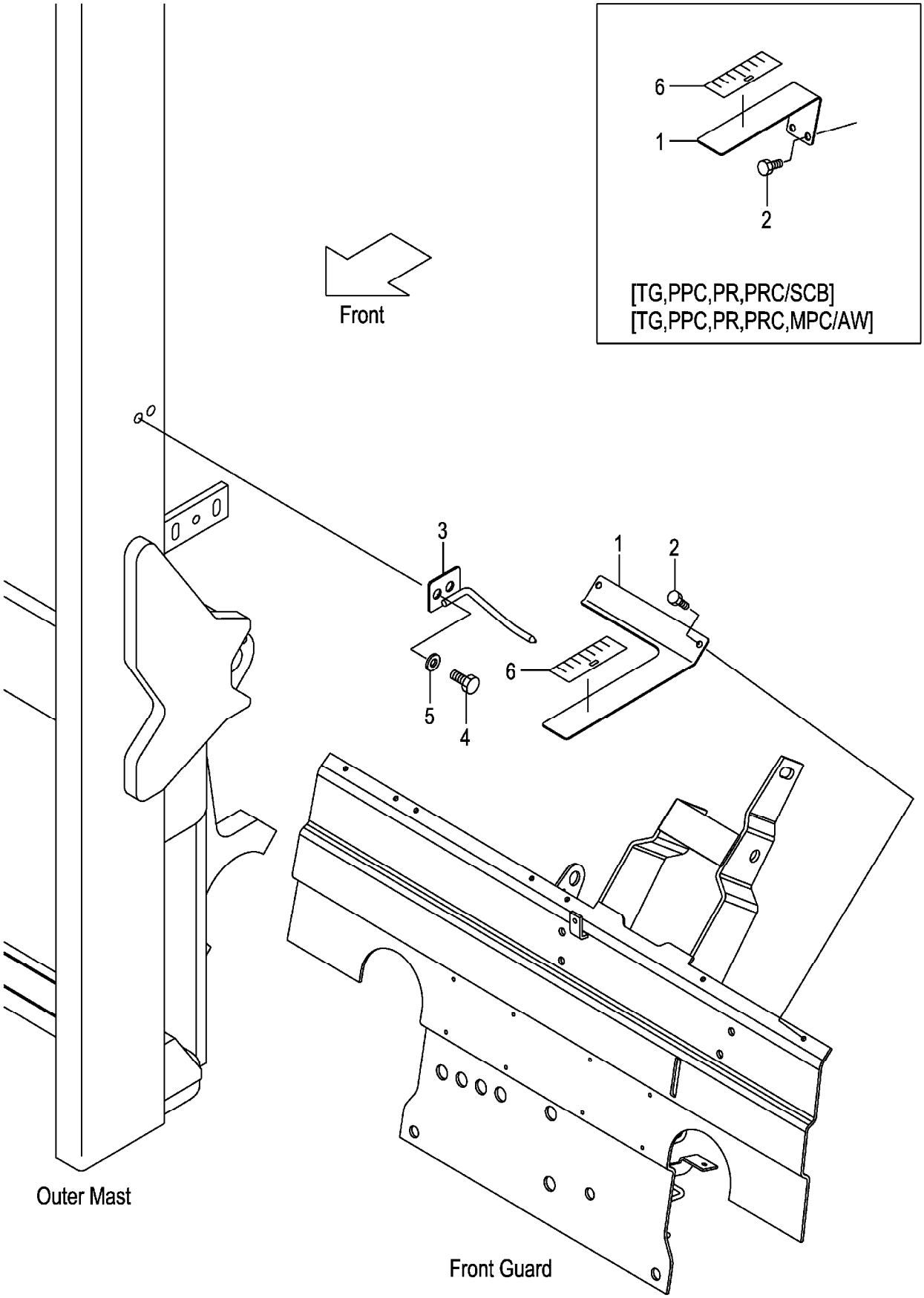

A:VFM2N9(3T)

Item No	Part No.	Mark	Description		Req'd	Remarks : Serial No.
1	62A89-21811		GAUGE,TILT	ｹﾞｰｼﾞ	1	[VFM250-600/ (TG,PRC,PPC,MPC,PR)]
-	62A89-21831		GAUGE,TILT	ｹﾞｰｼﾞ	1	[VFM250-600/SCB/ (TG,PR,PPC,PRC)]
-	62A89-21831		GAUGE,TILT	ｹﾞｰｼﾞ	1	[VFM250-600/AW/ (TG,PR,PPC,PRC,MPC)]
2	01183-06020		BOLT	ﾎﾞﾙﾄ	2	[VFM250-600/] (TG,PRC,PPC,MPC,PR)]
-	01183-06020		BOLT	ﾎﾞﾙﾄ	2	[VFM250-600/SCB/ (TG,PR,PPC,PRC)]
-	01183-06020		BOLT	ﾎﾞﾙﾄ	2	[VFM250-600/AW/ (TG,PR,PPC,PRC,MPC)]
3	62A89-21851		INDICATOR	ｲﾝｼﾞｹｰﾀ	1	[VFM250-600/ (TG,PRC,PPC,MPC,PR)]
-	62A89-21851		INDICATOR	ｲﾝｼﾞｹｰﾀ	1	[VFM250-600/SCB/ (TG,PR,PPC,PRC)]
-	62A89-21851		INDICATOR	ｲﾝｼﾞｹｰﾀ	1	[VFM250-600/AW/ (TG,PR,PPC,PRC,MPC)]
4	01184-12025		BOLT	ﾎﾞﾙﾄ	2	[VFM250-600/ (TG,PRC,PPC,MPC,PR)]
-	01184-12025		BOLT	ﾎﾞﾙﾄ	2	[VFM250-600/SCB/ (TG,PR,PPC,PRC)]
-	01184-12025		BOLT	ﾎﾞﾙﾄ	2	[VFM250-600/AW/ (TG,PR,PPC,PRC,MPC)]
5	02000-00012		WASHER	ﾜｯｼｬ	2	[VFM250-600/ (TG,PRC,PPC,MPC,PR)]
-	02000-00012		WASHER	ﾜｯｼｬ	2	[VFM250-600/SCB/ (TG,PR,PPC,PRC)]
-	02000-00012		WASHER	ﾜｯｼｬ	2	[VFM250-600/AW/ (TG,PR,PPC,PRC,MPC)]
6	62459-23371		SEAL,GAUGE	ｼｰﾙ	1	[VFM250-600/ (TG,PRC,PPC,MPC,PR)]
-	62459-23371		SEAL,GAUGE	ｼｰﾙ	1	[VFM250-600/SCB/ (TG,PR,PPC,PRC)]
-	62459-23371		SEAL,GAUGE	ｼｰﾙ	1	[VFM250-600/AW/ (TG,PR,PPC,PRC,MPC)]

FIG.207 LIFT CYLINDER (FRONT) [VFM2N9]

(M7020540) リフトシリンダ(フロント)

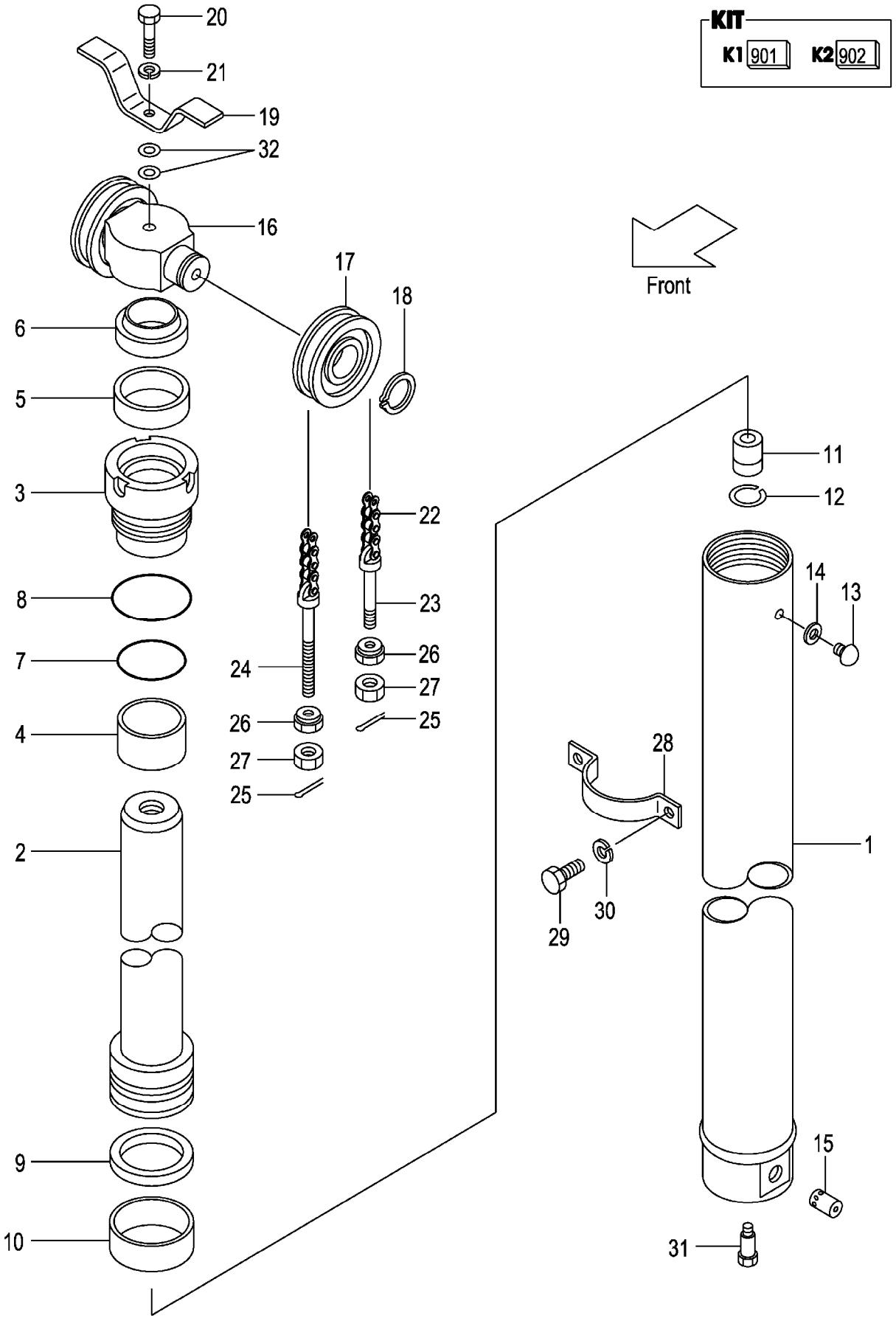

A:VFM2N9(3T)

Item No	Part No.	Mark	Description		Req'd	Remarks : Serial No.
A1	22N90-50511		CYL-ASSY,LIFT VFM200	ﾘﾌﾄｼﾘﾝﾀﾞｱｯｾﾝ	1	INC.1-15
-	22N90-50521		CYL-ASSY,LIFT VFM225	ﾘﾌﾄｼﾘﾝﾀﾞｱｯｾﾝ	1	INC.1-15
-	22N90-50531		CYL-ASSY,LIFT VFM250	ﾘﾌﾄｼﾘﾝﾀﾞｱｯｾﾝ	1	INC.1-15
-	212Y0-50511		CYL-ASSY,LIFT VFM270	ﾘﾌﾄｼﾘﾝﾀﾞｱｯｾﾝ	1	INC.1-15
-	212Y0-50521		CYL-ASSY,LIFT VFM275	ﾘﾌﾄｼﾘﾝﾀﾞｱｯｾﾝ	1	INC.1-15
-	212Y0-50501		CYL-ASSY,LIFT VFM300	ﾘﾌﾄｼﾘﾝﾀﾞｱｯｾﾝ	1	INC.1-15
-	212Y0-50531		CYL-ASSY,LIFT VFM325	ﾘﾌﾄｼﾘﾝﾀﾞｱｯｾﾝ	1	INC.1-15
-	212Y0-50541		CYL-ASSY,LIFT VFM330	ﾘﾌﾄｼﾘﾝﾀﾞｱｯｾﾝ	1	INC.1-15
-	212Y0-50551		CYL-ASSY,LIFT VFM350	ﾘﾌﾄｼﾘﾝﾀﾞｱｯｾﾝ	1	INC.1-15
-	212Y0-50561		CYL-ASSY,LIFT VFM366	ﾘﾌﾄｼﾘﾝﾀﾞｱｯｾﾝ	1	INC.1-15
-	212Y0-50571		CYL-ASSY,LIFT VFM370	ﾘﾌﾄｼﾘﾝﾀﾞｱｯｾﾝ	1	INC.1-15
-	212Y0-50581		CYL-ASSY,LIFT VFM375	ﾘﾌﾄｼﾘﾝﾀﾞｱｯｾﾝ	1	INC.1-15
-	212Y0-50591		CYL-ASSY,LIFT VFM400	ﾘﾌﾄｼﾘﾝﾀﾞｱｯｾﾝ	1	INC.1-15
-	212Y0-50601		CYL-ASSY,LIFT VFM425	ﾘﾌﾄｼﾘﾝﾀﾞｱｯｾﾝ	1	INC.1-15
-	212Y0-50611		CYL-ASSY,LIFT VFM450	ﾘﾌﾄｼﾘﾝﾀﾞｱｯｾﾝ	1	INC.1-15
-	212Y0-50621		CYL-ASSY,LIFT VFM475	ﾘﾌﾄｼﾘﾝﾀﾞｱｯｾﾝ	1	INC.1-15
-	212Y0-50631		CYL-ASSY,LIFT VFM500	ﾘﾌﾄｼﾘﾝﾀﾞｱｯｾﾝ	1	INC.1-15
-	212Y0-50641		CYL-ASSY,LIFT VFM550	ﾘﾌﾄｼﾘﾝﾀﾞｱｯｾﾝ	1	INC.1-15
-	212Y0-50651		CYL-ASSY,LIFT VFM600	ﾘﾌﾄｼﾘﾝﾀﾞｱｯｾﾝ	1	INC.1-15
901	B-B685B-00005	K1	KIT,HEAD	ﾍｯﾄﾞｷｯﾄ	1	INC.3,4
902	B-B685A-00007	K2	KIT,REPAIR	ﾘﾍﾟｱｷｯﾄ	1	INC.5-10,14
1	B-B6727-18201		BODY,CYL VFM200	ﾎﾞﾃﾞｨ	1	
-	B-B6727-18301		BODY,CYL VFM225	ﾎﾞﾃﾞｨ	1	
-	B-B6727-18401		BODY,CYL VFM250	ﾎﾞﾃﾞｨ	1	
-	B-B6727-04601		BODY,CYL VFM270	ﾎﾞﾃﾞｨ	1	
-	B-B6727-04701		BODY,CYL VFM275	ﾎﾞﾃﾞｨ	1	
-	B-B6727-04801		BODY,CYL VFM300	ﾎﾞﾃﾞｨ	1	
-	B-B6727-04901		BODY,CYL VFM325	ﾎﾞﾃﾞｨ	1	
-	B-B6727-05001		BODY,CYL VFM330	ﾎﾞﾃﾞｨ	1	
-	B-B6727-05101		BODY,CYL VFM350	ﾎﾞﾃﾞｨ	1	
-	B-B6727-05201		BODY,CYL VFM366	ﾎﾞﾃﾞｨ	1	
-	B-B6727-05301		BODY,CYL VFM370	ﾎﾞﾃﾞｨ	1	
-	B-B6727-05401		BODY,CYL VFM375	ﾎﾞﾃﾞｨ	1	
-	B-B6727-05501		BODY,CYL VFM400	ﾎﾞﾃﾞｨ	1	
-	B-B6727-05601		BODY,CYL VFM425	ﾎﾞﾃﾞｨ	1	
-	B-B6727-05701		BODY,CYL VFM450	ﾎﾞﾃﾞｨ	1	
-	B-B6727-05801		BODY,CYL VFM475	ﾎﾞﾃﾞｨ	1	
-	B-B6727-05901		BODY,CYL VFM500	ﾎﾞﾃﾞｨ	1	
-	B-B6727-06001		BODY,CYL VFM550	ﾎﾞﾃﾞｨ	1	
-	B-B6727-18101		BODY,CYL VFM600	ﾎﾞﾃﾞｨ	1	
2	B-B6727-18202		ROD VFM200	ﾛｯﾄﾞ	1	
-	B-B6727-18302		ROD VFM225	ﾛｯﾄﾞ	1	
-	B-B6727-18402		ROD VFM250	ﾛｯﾄﾞ	1	
-	B-B6727-04602		ROD VFM270	ﾛｯﾄﾞ	1	
-	B-B6727-04702		ROD VFM275	ﾛｯﾄﾞ	1	
-	B-B6727-04802		ROD VFM300	ﾛｯﾄﾞ	1	
-	B-B6727-04902		ROD VFM325	ﾛｯﾄﾞ	1	
-	B-B6727-05002		ROD VFM330	ﾛｯﾄﾞ	1	
-	B-B6727-05102		ROD VFM350	ﾛｯﾄﾞ	1	
-	B-B6727-05202		ROD VFM366	ﾛｯﾄﾞ	1	

FIG.207 LIFT CYLINDER (FRONT) [VFM2N9]

(M7020540) リフトシリンダ(フロント)

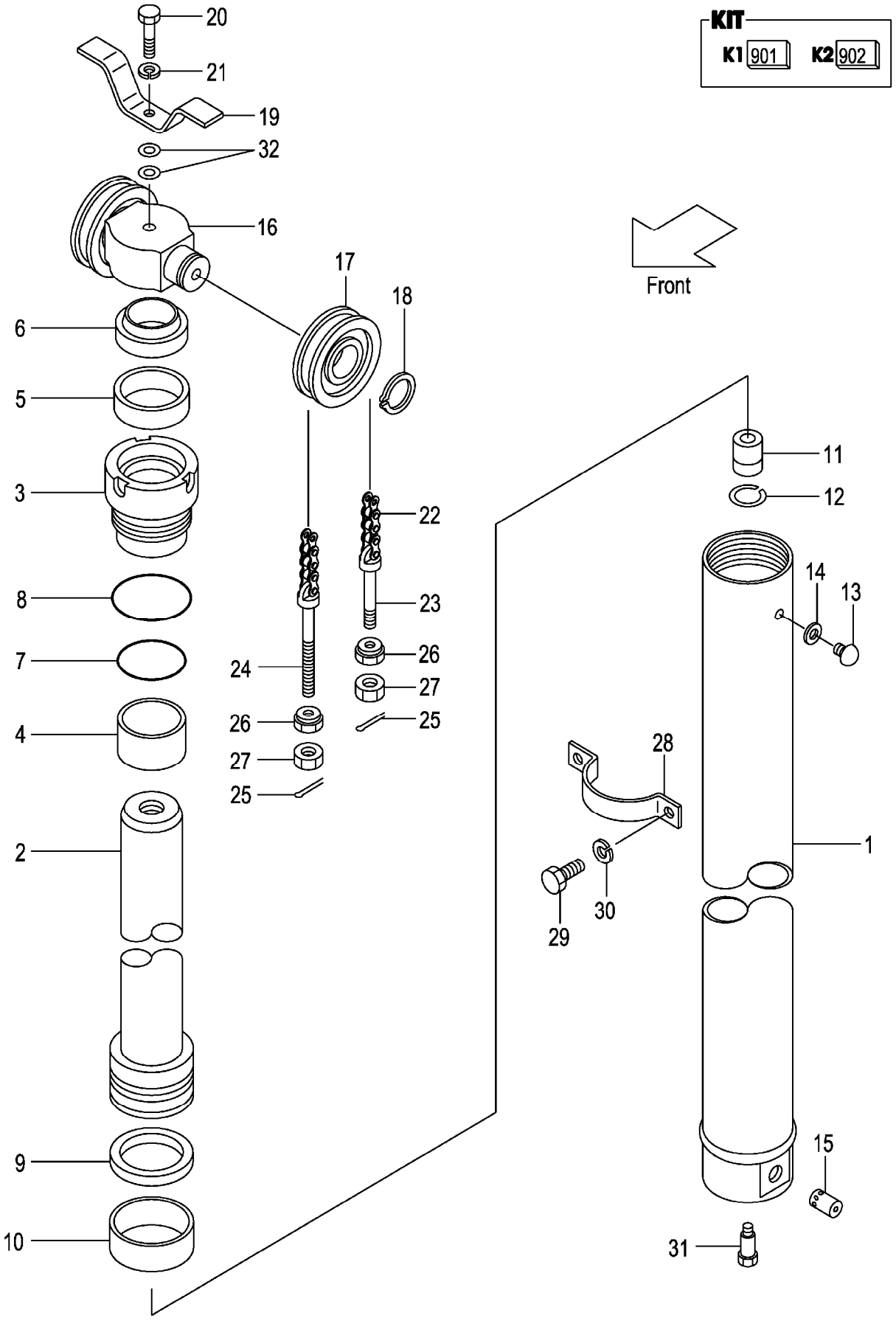

A:VFM2N9(3T)

Item No	Part No.	Mark	Description		Req'd	Remarks : Serial No.
-	B-B6727-05302		ROD VFM370	ﾛｯﾄﾞ	1	
-	B-B6727-05402		ROD VFM375	ﾛｯﾄﾞ	1	
-	B-B6727-05502		ROD VFM400	ﾛｯﾄﾞ	1	
-	B-B6727-05602		ROD VFM425	ﾛｯﾄﾞ	1	
-	B-B6727-05702		ROD VFM450	ﾛｯﾄﾞ	1	
-	B-B6727-05802		ROD VFM475	ﾛｯﾄﾞ	1	
-	B-B6727-05902		ROD VFM500	ﾛｯﾄﾞ	1	
-	B-B6727-06002		ROD VFM550	ﾛｯﾄﾞ	1	
-	B-B6727-18102		ROD VFM600	ﾛｯﾄﾞ	1	
3	B-B6121-85007	*	HEAD	ﾍｯﾄﾞ	1	
4	B-30131-65012	*	BUSHING	ﾌﾞｯｼﾝｸﾞ	1	
5	B-30961-65013	*	U-RING	Uﾘﾝｸﾞ	1	
6	B-30191-65050	*	RING,WIPER	ﾘﾝｸﾞ	1	
7	B-95123-08000	*	O-RING	Oﾘﾝｸﾞ	1	
8	B-95151-08500	*	O-RING	Oﾘﾝｸﾞ	1	
9	B-B6983-85007	*	RING,SEAL	ﾘﾝｸﾞ	1	
10	B-30181-85002	*	RING,SLIDE	ﾘﾝｸﾞ	1	
11	B-C4300-22001		VALVE,CHECK	ﾊﾞﾙﾌﾞ	1	
12	B-94721-22101		RING,SNAP	ｽﾅｯﾌﾟﾘﾝｸﾞ	1	
13	B-B6521-90004		PLUG	ﾌﾟﾗｸﾞ	1	
14	B-B6711-00001	*	GASKET	ｶﾞｽｹｯﾄ	1	
15	B-26570-30125		VALVE	ﾊﾞﾙﾌﾞ	1	
16	212Y0-82001		HEAD,PISTON	ﾍｯﾄﾞ	1	
17	234A8-43501		SHEAVE	ｼｰﾌﾞ	2	
-	22208-40031		SHEAVE	ｼｰﾌﾞ	2	[FC][FCS35][FCS45][FCS55]
18	02100-00040		RING,SNAP	ｽﾅｯﾌﾟﾘﾝｸﾞ	2	
19	214A0-82681		STOPPER,CHAIN	ｽﾄｯﾊﾟ	1	
20	01100-16075		BOLT	ﾎﾞﾙﾄ	1	
21	02010-00016		WASHER	ﾜｯｼｬ	1	
22	22438-45431		CHAIN,LEAF VFM200	ﾁｪｰﾝ	2	
-	22438-45491		CHAIN,LEAF VFM225	ﾁｪｰﾝ	2	
-	22438-45511		CHAIN,LEAF VFM250	ﾁｪｰﾝ	2	
-	22438-45551		CHAIN,LEAF VFM270	ﾁｪｰﾝ	2	
-	22438-45571		CHAIN,LEAF VFM275	ﾁｪｰﾝ	2	
-	22438-45591		CHAIN,LEAF VFM300	ﾁｪｰﾝ	2	
-	22438-45631		CHAIN,LEAF VFM325	ﾁｪｰﾝ	2	
-	22438-45651		CHAIN,LEAF VFM330	ﾁｪｰﾝ	2	
-	22438-45691		CHAIN,LEAF VFM350	ﾁｪｰﾝ	2	
-	22438-45731		CHAIN,LEAF VFM366	ﾁｪｰﾝ	2	
-	22438-45731		CHAIN,LEAF VFM370	ﾁｪｰﾝ	2	
-	22438-45731		CHAIN,LEAF VFM375	ﾁｪｰﾝ	2	
-	22438-45811		CHAIN,LEAF VFM400	ﾁｪｰﾝ	2	
-	22438-45851		CHAIN,LEAF VFM425	ﾁｪｰﾝ	2	
-	22438-45911		CHAIN,LEAF VFM450	ﾁｪｰﾝ	2	
-	22438-45951		CHAIN,LEAF VFM475	ﾁｪｰﾝ	1	
-	22438-46011		CHAIN,LEAF VFM500	ﾁｪｰﾝ	1	
-	22438-46131		CHAIN,LEAF VFM550	ﾁｪｰﾝ	1	
-	22438-46231		CHAIN,LEAF VFM600	ﾁｪｰﾝ	1	
-	09001-10035		CHAIN,ROLLER VFM200	ﾁｪｰﾝ	2	[FC][FCS35][FCS45][FCS55]
-	09001-10039		CHAIN,ROLLER VFM225	ﾁｪｰﾝ	2	[FC][FCS35][FCS45][FCS55]

FIG.207 LIFT CYLINDER (FRONT) [VFM2N9]

(M7020540) リフトシリンダ(フロント)

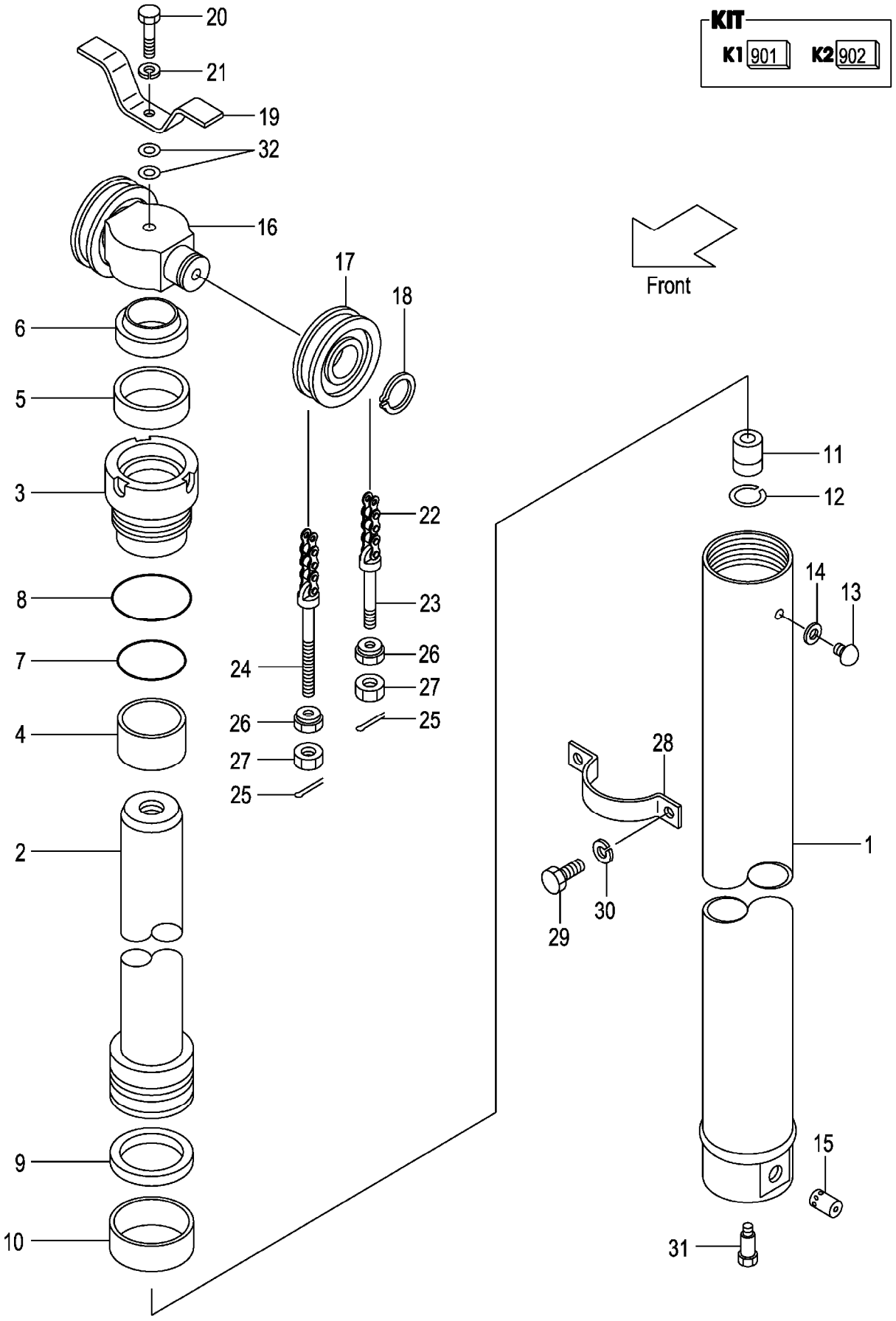

A:VFM2N9(3T)

Item No	Part No.	Mark	Description	Req'd	Remarks : Serial No.
-	09001-10041		CHAIN,ROLLER VFM250 チェーン	2	[FC][FCS35][FCS45][FCS55]
-	09001-10045		CHAIN,ROLLER VFM270 チェーン	2	[FC][FCS35][FCS45][FCS55]
-	09001-10045		CHAIN,ROLLER VFM275 チェーン	2	[FC][FCS35][FCS45][FCS55]
-	09001-10047		CHAIN,ROLLER VFM300 チェーン	2	[FC][FCS35][FCS45][FCS55]
-	09001-10051		CHAIN,ROLLER VFM325 チェーン	2	[FC][FCS35][FCS45][FCS55]
-	09001-10053		CHAIN,ROLLER VFM330 チェーン	2	[FC][FCS35][FCS45][FCS55]
-	09001-10055		CHAIN,ROLLER VFM350 チェーン	2	[FC][FCS35][FCS45][FCS55]
-	09001-10057		CHAIN,ROLLER VFM366 チェーン	2	[FC][FCS35][FCS45][FCS55]
-	09001-10059		CHAIN,ROLLER VFM370 チェーン	2	[FC][FCS35][FCS45][FCS55]
-	09001-10059		CHAIN,ROLLER VFM375 チェーン	2	[FC][FCS35][FCS45][FCS55]
-	09001-10065		CHAIN,ROLLER VFM400 チェーン	2	[FC][FCS35][FCS45][FCS55]
-	09001-10069		CHAIN,ROLLER VFM425 チェーン	2	[FC][FCS35][FCS45][FCS55]
-	09001-10073		CHAIN,ROLLER VFM450 チェーン	2	[FC][FCS35][FCS45][FCS55]
-	09001-10077		CHAIN,ROLLER VFM475 チェーン	2	[FC][FCS35][FCS45][FCS55]
-	09001-10081		CHAIN,ROLLER VFM500 チェーン	2	[FC][FCS35][FCS45][FCS55]
-	09001-10089		CHAIN,ROLLER VFM550 チェーン	2	[FC][FCS35][FCS45][FCS55]
-	09001-10097		CHAIN,ROLLER VFM600 チェーン	2	[FC][FCS35][FCS45][FCS55]
23	24459-42381		PIN,ANCHOR ピン	2	
-	231A0-82001		PIN,ANCHOR ピン	2	[FC][FCS35][FCS45][FCS55]
24	24459-42391		PIN,ANCHOR ピン	2	
-	22218-42111		PIN,ANCHOR ピン	2	[FC][FCS35][FCS45][FCS55]
25	02200-03030		PIN,COTTER ピン	4	
26	22218-40191		NUT ナット	4	
27	01402-00018		NUT ナット	4	
-	01400-00018		NUT ナット	4	[FC][FCS35][FCS45][FCS55]
28	212Y0-82101		SUPPORT,CYLINDER サポート	1	
29	01103-10018		BOLT ボルト	2	
30	02011-00010		WASHER ワッシャ	2	
31	214A0-82831		BOLT ボルト	1	
32	02000-20016		WASHER ワッシャ	2	

FIG.208 LIFT CYLINDER (REAR) [VFM2N9]

(M7020550) リフトシリンダ(リヤー)

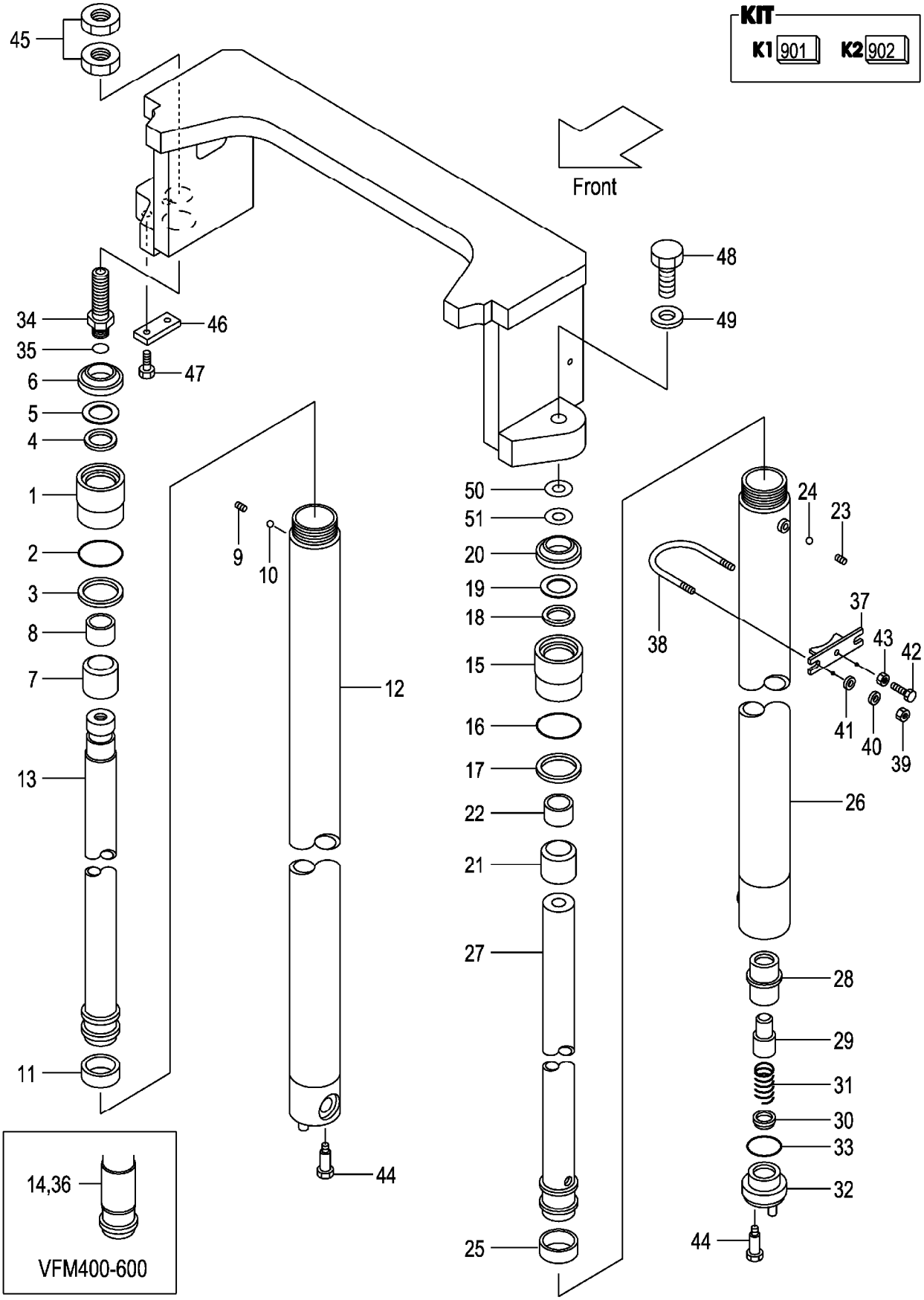

A:VFM2N9(3T)

Item No	Part No.	Mark	Description		Req'd	Remarks : Serial No.
A1	277T0-51611		CYL-ASSY,LIFT,RH VFM200	リフトシリンダアッセン	1	INC.1-13,34,35
-	277T0-51621		CYL-ASSY,LIFT,RH VFM225	リフトシリンダアッセン	1	INC.1-13,34,35
-	277T0-51631		CYL-ASSY,LIFT,RH VFM250	リフトシリンダアッセン	1	INC.1-13,34,35
-	277T0-51641		CYL-ASSY,LIFT,RH VFM270	リフトシリンダアッセン	1	INC.1-13,34,35
-	277T0-51651		CYL-ASSY,LIFT,RH VFM275	リフトシリンダアッセン	1	INC.1-13,34,35
-	277T0-51601		CYL-ASSY,LIFT,RH VFM300	リフトシリンダアッセン	1	INC.1-13,34,35
-	277T0-51661		CYL-ASSY,LIFT,RH VFM325	リフトシリンダアッセン	1	INC.1-13,34,35
-	277T0-51671		CYL-ASSY,LIFT,RH VFM330	リフトシリンダアッセン	1	INC.1-13,34,35
-	277T0-51681		CYL-ASSY,LIFT,RH VFM350	リフトシリンダアッセン	1	INC.1-13,34,35
-	277T0-51691		CYL-ASSY,LIFT,RH VFM366	リフトシリンダアッセン	1	INC.1-13,34,35
-	277T0-51701		CYL-ASSY,LIFT,RH VFM370	リフトシリンダアッセン	1	INC.1-13,34,35
-	277T0-51711		CYL-ASSY,LIFT,RH VFM375	リフトシリンダアッセン	1	INC.1-13,34,35
-	277T0-51721		CYL-ASSY,LIFT,RH VFM400	リフトシリンダアッセン	1	INC.1-13,34,35
-	277T0-51731		CYL-ASSY,LIFT,RH VFM425	リフトシリンダアッセン	1	INC.1-13,34,35
-	277T0-51741		CYL-ASSY,LIFT,RH VFM450	リフトシリンダアッセン	1	INC.1-13,34,35
-	277T0-51751		CYL-ASSY,LIFT,RH VFM475	リフトシリンダアッセン	1	INC.1-13,34,35
-	277T0-51761		CYL-ASSY,LIFT,RH VFM500	リフトシリンダアッセン	1	INC.1-13,34,35
-	277T0-51771		CYL-ASSY,LIFT,RH VFM550	リフトシリンダアッセン	1	INC.1-13,34,35
-	277T0-51781		CYL-ASSY,LIFT,RH VFM600	リフトシリンダアッセン	1	INC.1-13,34,35
901	234F0-59801	K1	KIT,OVERHAUL	オーバホールキット	1	INC.2-6,11
1	234F0-52501		CAP,CYL	キャップ	1	
2	214A8-42571	*	O-RING	Oリング	1	
3	214J0-53681	*	RING,BACK-UP	リング	1	
4	23918-52161	*	PACKING	パッキング	1	
5	23918-52171	*	RING,BACK-UP	リング	1	
6	214A8-46001	*	SEAL,DUST	シール	1	
A2	234A8-40611		SLEEVE-ASSY	スリーブアッセン	1	INC.7,8
7	234A8-42511		SLEEVE	スリーブ	1	
8	23678-42301		BUSHING	ブッシング	1	
9	234A0-52611		PLUG	プラグ	1	
10	03190-00006		BALL	ボール	1	

FIG.208 LIFT CYLINDER (REAR) [VFM2N9]

(M7020550) リフトシリンダ(リヤー)

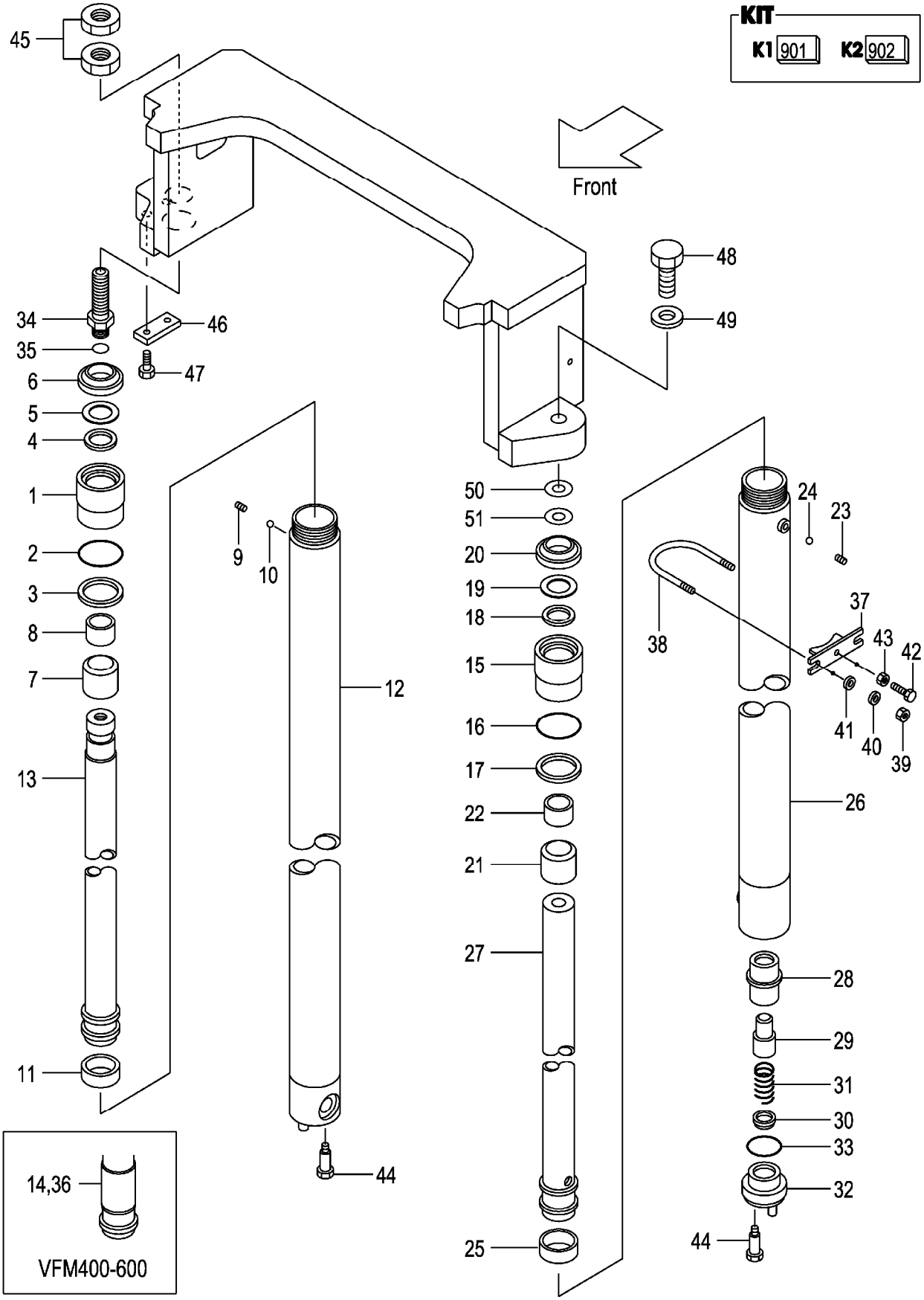

A:VFM2N9(3T)

Item No	Part No.	Mark	Description		Req'd	Remarks : Serial No.
11	27970-53141	*	WEARING	ｳｪｱﾘﾝｸﾞ	1	
12	277T0-51211		BODY,CYL,RH VFM200	ﾎﾞﾃﾞｨ	1	
-	277T0-51221		BODY,CYL,RH VFM225	ﾎﾞﾃﾞｨ	1	
-	277T0-51231		BODY,CYL,RH VFM250	ﾎﾞﾃﾞｨ	1	
-	277T0-51241		BODY,CYL,RH VFM270	ﾎﾞﾃﾞｨ	1	
-	277T0-51251		BODY,CYL,RH VFM275	ﾎﾞﾃﾞｨ	1	
-	277T0-51201		BODY,CYL,RH VFM300	ﾎﾞﾃﾞｨ	1	
-	277T0-51261		BODY,CYL,RH VFM325	ﾎﾞﾃﾞｨ	1	
-	277T0-51271		BODY,CYL,RH VFM330	ﾎﾞﾃﾞｨ	1	
-	277T0-51281		BODY,CYL,RH VFM350	ﾎﾞﾃﾞｨ	1	
-	277T0-51291		BODY,CYL,RH VFM366	ﾎﾞﾃﾞｨ	1	
-	277T0-51301		BODY,CYL,RH VFM370	ﾎﾞﾃﾞｨ	1	
-	277T0-51311		BODY,CYL,RH VFM375	ﾎﾞﾃﾞｨ	1	
-	277T0-51321		BODY,CYL,RH VFM400	ﾎﾞﾃﾞｨ	1	
-	277T0-51331		BODY,CYL,RH VFM425	ﾎﾞﾃﾞｨ	1	
-	277T0-51341		BODY,CYL,RH VFM450	ﾎﾞﾃﾞｨ	1	
-	277T0-51351		BODY,CYL,RH VFM475	ﾎﾞﾃﾞｨ	1	
-	277T0-51361		BODY,CYL,RH VFM500	ﾎﾞﾃﾞｨ	1	
-	277T0-51371		BODY,CYL,RH VFM550	ﾎﾞﾃﾞｨ	1	
-	277T0-51381		BODY,CYL,RH VFM600	ﾎﾞﾃﾞｨ	1	
13	214J0-51711		ROD,PISTON VFM200	ﾛｯﾄﾞ	1	
-	214J0-51721		ROD,PISTON VFM225	ﾛｯﾄﾞ	1	
-	214J0-51731		ROD,PISTON VFM250	ﾛｯﾄﾞ	1	
-	214J0-51741		ROD,PISTON VFM270	ﾛｯﾄﾞ	1	
-	214J0-51751		ROD,PISTON VFM275	ﾛｯﾄﾞ	1	
-	214J0-51701		ROD,PISTON VFM300	ﾛｯﾄﾞ	1	
-	214J0-51761		ROD,PISTON VFM325	ﾛｯﾄﾞ	1	
-	214J0-51771		ROD,PISTON VFM330	ﾛｯﾄﾞ	1	
-	214J0-51781		ROD,PISTON VFM350	ﾛｯﾄﾞ	1	
-	214J0-51791		ROD,PISTON VFM366	ﾛｯﾄﾞ	1	
-	214J0-51801		ROD,PISTON VFM370	ﾛｯﾄﾞ	1	
-	214J0-51811		ROD,PISTON VFM375	ﾛｯﾄﾞ	1	
-	214J0-51821		ROD,PISTON,RH VFM400	ﾛｯﾄﾞ	1	
-	214J0-51831		ROD,PISTON,RH VFM425	ﾛｯﾄﾞ	1	
-	214J0-51841		ROD,PISTON,RH VFM450	ﾛｯﾄﾞ	1	
-	214J0-51851		ROD,PISTON,RH VFM475	ﾛｯﾄﾞ	1	
-	214J0-51861		ROD,PISTON,RH VFM500	ﾛｯﾄﾞ	1	
-	214J0-51871		ROD,PISTON,RH VFM550	ﾛｯﾄﾞ	1	
-	214J0-51881		ROD,PISTON,RH VFM600	ﾛｯﾄﾞ	1	
14	24450-52571		SPACER	ｽﾍﾟｰｻ	1	(VFM400-500)
-	24450-52571		SPACER	ｽﾍﾟｰｻ	2	(VFM550-600)
A3	277T0-51411		CYL-ASSY,LIFT,LH VFM200	ﾘﾌﾄｼﾘﾝﾀﾞｱｯｾﾝ	1	INC.15-33
-	277T0-51421		CYL-ASSY,LIFT,LH VFM225	ﾘﾌﾄｼﾘﾝﾀﾞｱｯｾﾝ	1	INC.15-33
-	277T0-51431		CYL-ASSY,LIFT,LH VFM250	ﾘﾌﾄｼﾘﾝﾀﾞｱｯｾﾝ	1	INC.15-33
-	277T0-51441		CYL-ASSY,LIFT,LH VFM270	ﾘﾌﾄｼﾘﾝﾀﾞｱｯｾﾝ	1	INC.15-33

FIG.208 LIFT CYLINDER (REAR) [VFM2N9]

(M7020550) リフトシリンダ(リヤー)

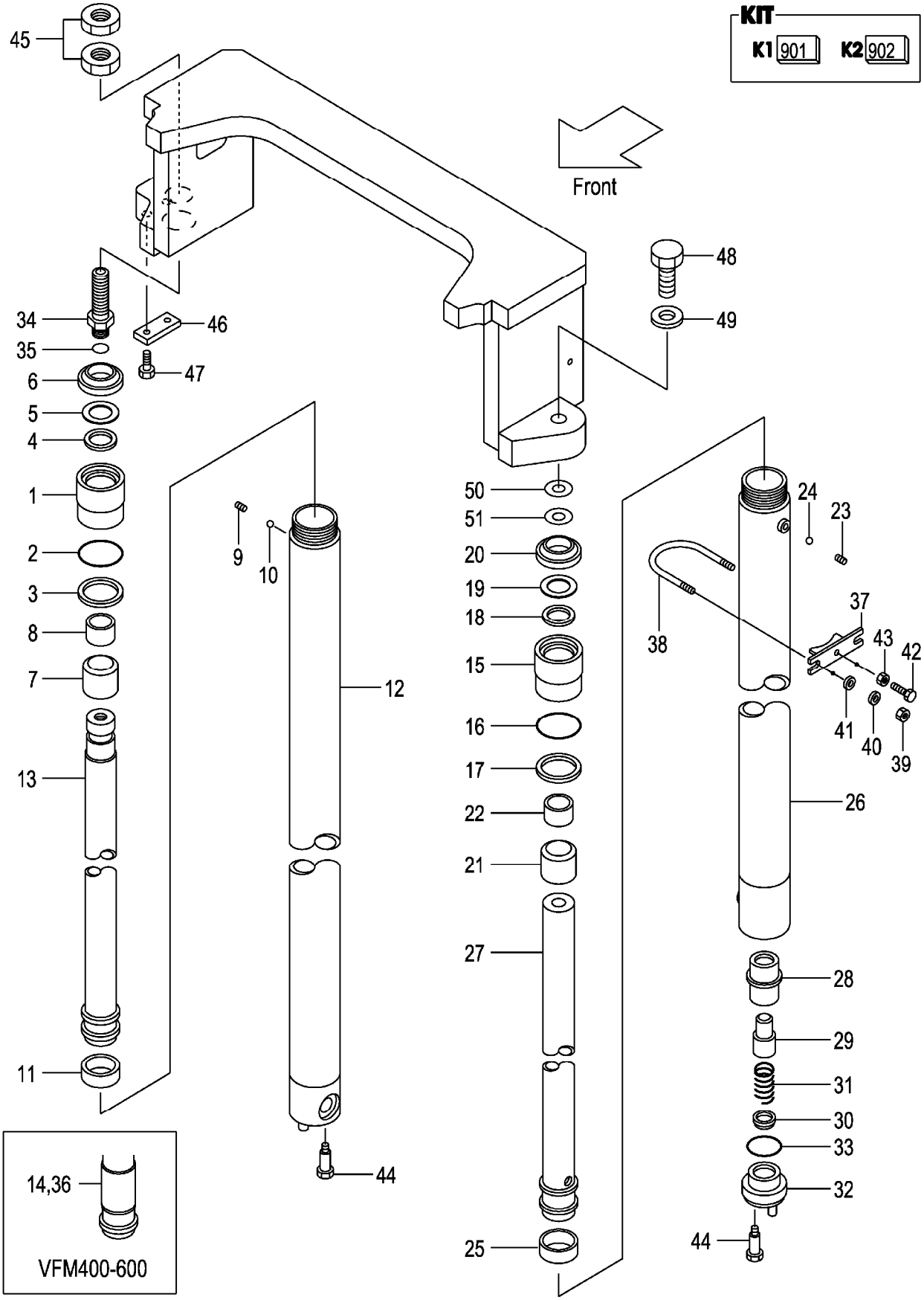

A:VFM2N9(3T)

Item No	Part No.	Mark	Description		Req'd	Remarks : Serial No.
-	277T0-51451		CYL-ASSY,LIFT,LH VFM275	ﾘﾌﾄｼﾘﾝﾀﾞｱｯｾﾝ	1	INC.15-33
-	277T0-51401		CYL-ASSY,LIFT,LH VFM300	ﾘﾌﾄｼﾘﾝﾀﾞｱｯｾﾝ	1	INC.15-33
-	277T0-51461		CYL-ASSY,LIFT,LH VFM325	ﾘﾌﾄｼﾘﾝﾀﾞｱｯｾﾝ	1	INC.15-33
-	277T0-51471		CYL-ASSY,LIFT,LH VFM330	ﾘﾌﾄｼﾘﾝﾀﾞｱｯｾﾝ	1	INC.15-33
-	277T0-51481		CYL-ASSY,LIFT,LH VFM350	ﾘﾌﾄｼﾘﾝﾀﾞｱｯｾﾝ	1	INC.15-33
-	277T0-51491		CYL-ASSY,LIFT,LH VFM366	ﾘﾌﾄｼﾘﾝﾀﾞｱｯｾﾝ	1	INC.15-33
-	277T0-51501		CYL-ASSY,LIFT,LH VFM370	ﾘﾌﾄｼﾘﾝﾀﾞｱｯｾﾝ	1	INC.15-33
-	277T0-51511		CYL-ASSY,LIFT,LH VFM375	ﾘﾌﾄｼﾘﾝﾀﾞｱｯｾﾝ	1	INC.15-33
-	277T0-51521		CYL-ASSY,LIFT,LH VFM400	ﾘﾌﾄｼﾘﾝﾀﾞｱｯｾﾝ	1	INC.15-33,36
-	277T0-51531		CYL-ASSY,LIFT,LH VFM425	ﾘﾌﾄｼﾘﾝﾀﾞｱｯｾﾝ	1	INC.15-33,36
-	277T0-51541		CYL-ASSY,LIFT,LH VFM450	ﾘﾌﾄｼﾘﾝﾀﾞｱｯｾﾝ	1	INC.15-33,36
-	277T0-51551		CYL-ASSY,LIFT,LH VFM475	ﾘﾌﾄｼﾘﾝﾀﾞｱｯｾﾝ	1	INC.15-33,36
-	277T0-51561		CYL-ASSY,LIFT,LH VFM500	ﾘﾌﾄｼﾘﾝﾀﾞｱｯｾﾝ	1	INC.15-33,36
-	277T0-51571		CYL-ASSY,LIFT,LH VFM550	ﾘﾌﾄｼﾘﾝﾀﾞｱｯｾﾝ	1	INC.15-33,36
-	277T0-51581		CYL-ASSY,LIFT,LH VFM600	ﾘﾌﾄｼﾘﾝﾀﾞｱｯｾﾝ	1	INC.15-33,36
902	234F0-59801	K2	KIT,OVERHAUL	ｵｰﾊﾞﾎｰﾙｷｯﾄ	1	INC.16-20,25,33
15	234F0-52501		CAP	ｷｬｯﾌﾟ	1	
16	214A8-42571	*	O-RING	Oﾘﾝｸﾞ	1	
17	214J0-53681	*	RING,BACK-UP	ﾘﾝｸﾞ	1	
18	23918-52161	*	PACKING	ﾊﾟｯｷﾝｸﾞ	1	
19	23918-52171	*	RING,BACK-UP	ﾘﾝｸﾞ	1	
20	214A8-46001	*	SEAL,DUST	ｼｰﾙ	1	
A4	234A8-40611		SLEEVE-ASSY	ｽﾘｰﾌﾞｱｯｾﾝ	1	INC.21,22
21	234A8-42511		SLEEVE	ｽﾘｰﾌﾞ	1	
22	23678-42301		BUSHING	ﾌﾞｯｼﾝｸﾞ	1	
23	234A0-52611		PLUG	ﾌﾟﾗｸﾞ	1	
24	03190-00006		BALL	ﾎﾞｰﾙ	1	
25	27970-53141	*	WEARING	ｳｪｱﾘﾝｸﾞ	1	
26	277T0-51011		BODY,CYL,LH VFM200	ﾎﾞﾃﾞｨ	1	
-	277T0-51021		BODY,CYL,LH VFM225	ﾎﾞﾃﾞｨ	1	
-	277T0-51031		BODY,CYL,LH VFM250	ﾎﾞﾃﾞｨ	1	
-	277T0-51041		BODY,CYL,LH VFM270	ﾎﾞﾃﾞｨ	1	
-	277T0-51051		BODY,CYL,LH VFM275	ﾎﾞﾃﾞｨ	1	
-	277T0-51001		BODY,CYL,LH VFM300	ﾎﾞﾃﾞｨ	1	
-	277T0-51061		BODY,CYL,LH VFM325	ﾎﾞﾃﾞｨ	1	

FIG.208 LIFT CYLINDER (REAR) [VFM2N9]

(M7020550) リフトシリンダ(リヤー)

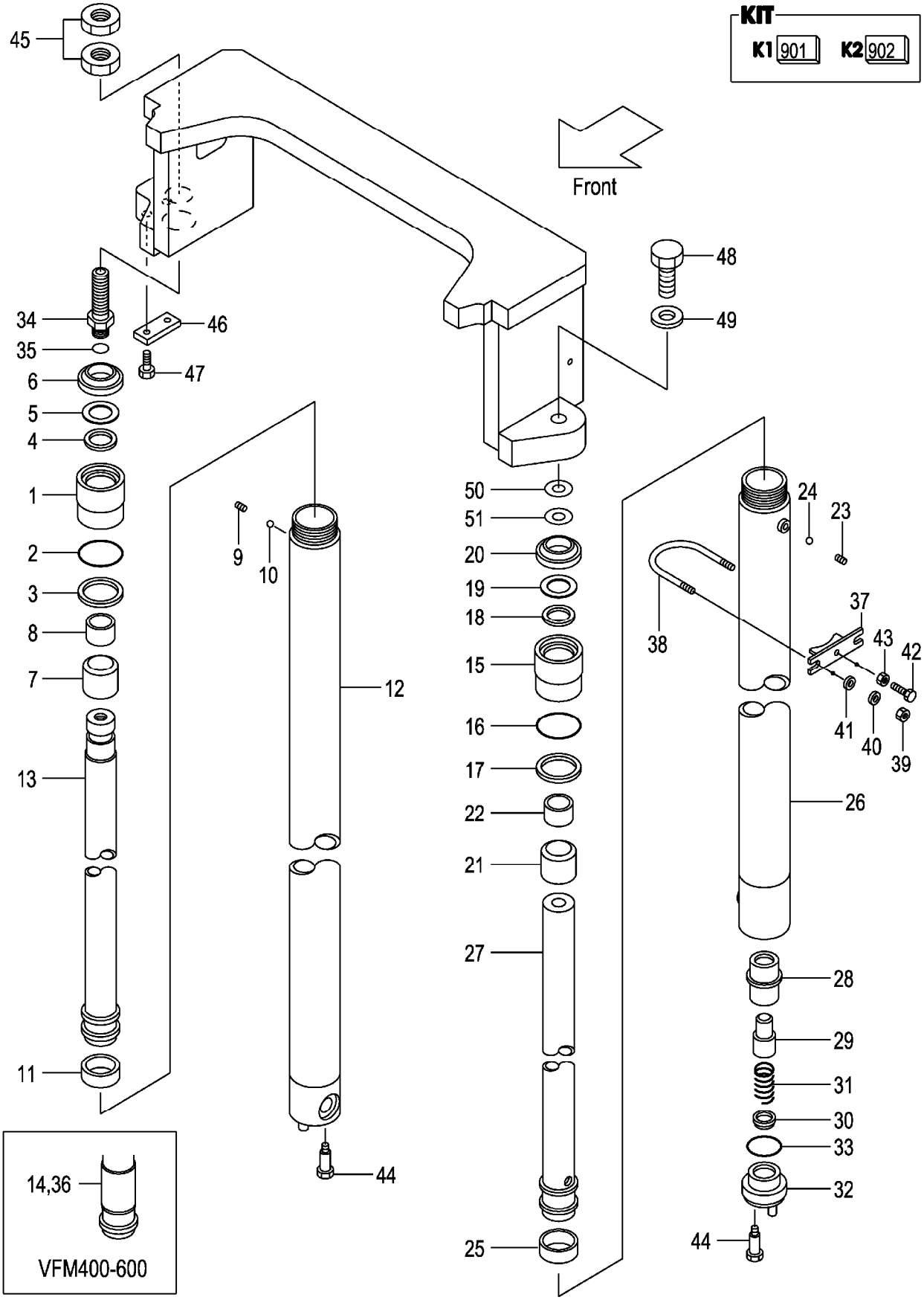

A:VFM2N9(3T)

Item No	Part No.	Mark	Description		Req'd	Remarks : Serial No.
-	277T0-51071		BODY,CYL,LH VFM330	ﾎﾞﾃﾞｨ	1	
-	277T0-51081		BODY,CYL,LH VFM350	ﾎﾞﾃﾞｨ	1	
-	277T0-51091		BODY,CYL,LH VFM366	ﾎﾞﾃﾞｨ	1	
-	277T0-51101		BODY,CYL,LH VFM370	ﾎﾞﾃﾞｨ	1	
-	277T0-51111		BODY,CYL,LH VFM375	ﾎﾞﾃﾞｨ	1	
-	277T0-51121		BODY,CYL,LH VFM400	ﾎﾞﾃﾞｨ	1	
-	277T0-51131		BODY,CYL,LH VFM425	ﾎﾞﾃﾞｨ	1	
-	277T0-51141		BODY,CYL,LH VFM450	ﾎﾞﾃﾞｨ	1	
-	277T0-51151		BODY,CYL,LH VFM475	ﾎﾞﾃﾞｨ	1	
-	277T0-51161		BODY,CYL,LH VFM500	ﾎﾞﾃﾞｨ	1	
-	277T0-51171		BODY,CYL,LH VFM550	ﾎﾞﾃﾞｨ	1	
-	277T0-51181		BODY,CYL,LH VFM600	ﾎﾞﾃﾞｨ	1	
27	229L0-51211		ROD,PISTON,LH VFM200	ﾛｯﾄﾞ	1	
-	229L0-51221		ROD,PISTON,LH VFM225	ﾛｯﾄﾞ	1	
-	229L0-51231		ROD,PISTON,LH VFM250	ﾛｯﾄﾞ	1	
-	229L0-51241		ROD,PISTON,LH VFM270	ﾛｯﾄﾞ	1	
-	229L0-51251		ROD,PISTON,LH VFM275	ﾛｯﾄﾞ	1	
-	229L0-51201		ROD,PISTON,LH VFM300	ﾛｯﾄﾞ	1	
-	229L0-51261		ROD,PISTON,LH VFM325	ﾛｯﾄﾞ	1	
-	229L0-51271		ROD,PISTON,LH VFM330	ﾛｯﾄﾞ	1	
-	229L0-51281		ROD,PISTON,LH VFM350	ﾛｯﾄﾞ	1	
-	229L0-51291		ROD,PISTON,LH VFM366	ﾛｯﾄﾞ	1	
-	229L0-51301		ROD,PISTON,LH VFM370	ﾛｯﾄﾞ	1	
-	229L0-51311		ROD,PISTON,LH VFM375	ﾛｯﾄﾞ	1	
-	229L0-51321		ROD,PISTON,LH VFM400	ﾛｯﾄﾞ	1	
-	229L0-51331		ROD,PISTON,LH VFM425	ﾛｯﾄﾞ	1	
-	229L0-51341		ROD,PISTON,LH VFM450	ﾛｯﾄﾞ	1	
-	229L0-51351		ROD,PISTON,LH VFM475	ﾛｯﾄﾞ	1	
-	229L0-51361		ROD,PISTON,LH VFM500	ﾛｯﾄﾞ	1	
-	229L0-51371		ROD,PISTON,LH VFM550	ﾛｯﾄﾞ	1	
-	229L0-51381		ROD,PISTON,LH VFM600	ﾛｯﾄﾞ	1	
28	53658-43021		SLEEVE	ｽﾘｰﾌﾞ	1	
29	53658-43011		PISTON	ﾋﾟｽﾄﾝ	1	
30	53658-43001		VALVE,CHECK	ﾊﾞﾙﾌﾞ	1	
31	53658-43031		SPRING	ｽﾌﾟﾘﾝｸﾞ	1	
32	53658-43041		PLUG	ﾌﾟﾗｸﾞ	1	
33	03320-00340	*	O-RING	Oﾘﾝｸﾞ	1	
34	214J0-53781		NIPPLE	ﾆｯﾌﾟﾙ	1	
35	03320-00240		O-RING	Oﾘﾝｸﾞ	1	
36	24450-52571		SPACER	ｽﾍﾟｰｻ	1	(VFM400-500)
-	24450-52571		SPACER	ｽﾍﾟｰｻ	2	(VFM550-600)
37	22N58-43011		SUPPORT	ｻﾎﾟｰﾄ	2	(VFM200-375)
-	22N58-43011		SUPPORT	ｻﾎﾟｰﾄ	4	(VFM400-600)
38	234A8-42551		U-BOLT	Uﾎﾞﾙﾄ	2	(VFM200-375)
-	234A8-42551		U-BOLT	Uﾎﾞﾙﾄ	4	(VFM400-600)
39	234A8-42561		NUT	ﾅｯﾄ	4	(VFM200-375)
-	234A8-42561		NUT	ﾅｯﾄ	8	(VFM400-600)
40	02010-20010		WASHER	ﾜｯｼｬ	4	(VFM200-375)
-	02010-20010		WASHER	ﾜｯｼｬ	8	(VFM400-600)
41	02000-20010		WASHER	ﾜｯｼｬ	4	(VFM200-375)

FIG.208 LIFT CYLINDER (REAR) [VFM2N9]

(M7020550) リフトシリンダ(リヤー)

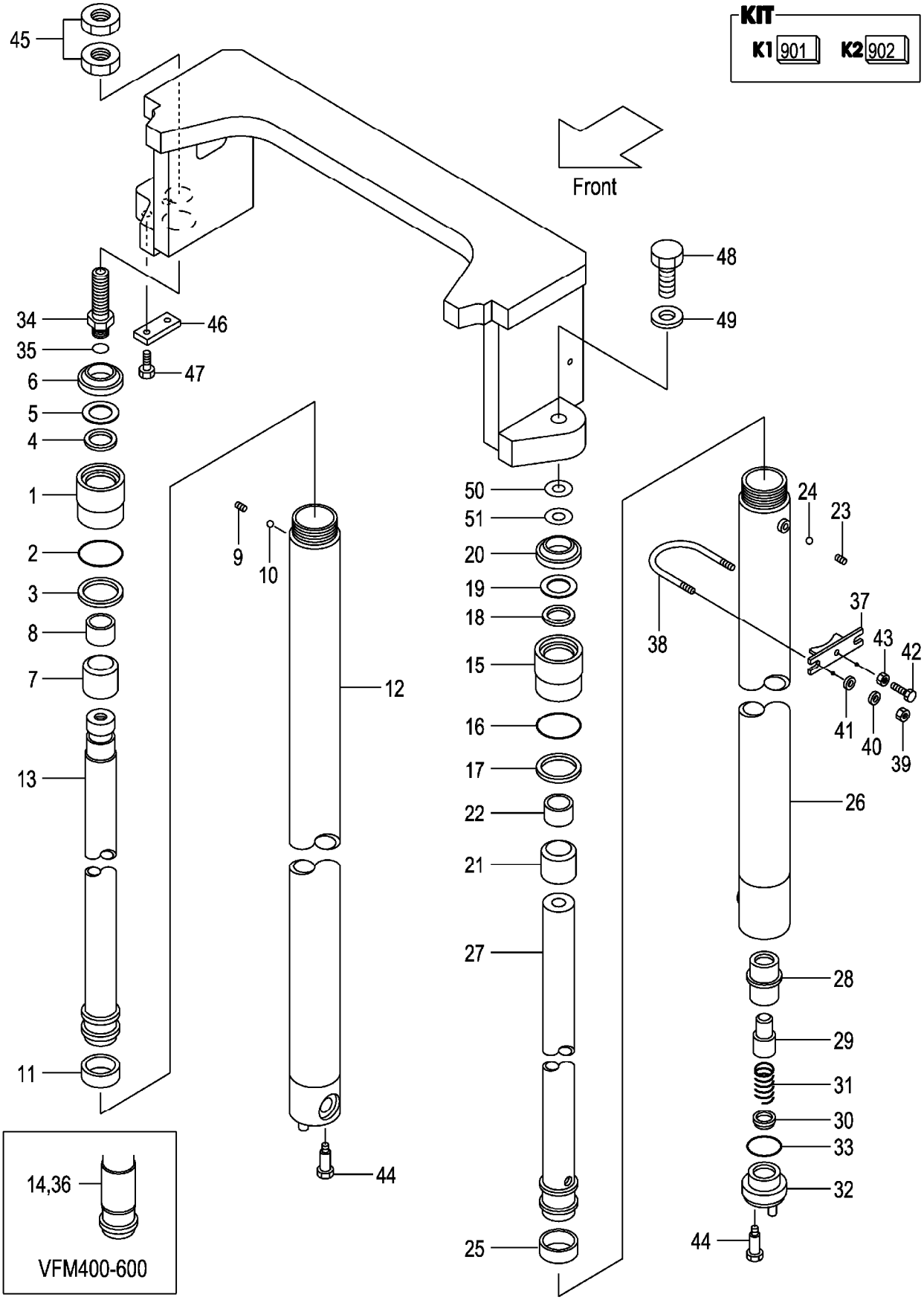

A:VFM2N9(3T)

Item No	Part No.	Mark	Description		Req'd	Remarks : Serial No.
-	02000-20010		WASHER	ﾜｯｼｬ	8	(VFM400-600)
42	232A8-42201		BOLT	ﾎﾞﾙﾄ	2	(VFM200-375)
-	232A8-42201		BOLT	ﾎﾞﾙﾄ	4	(VFM400-600)
43	234A8-42571		NUT	ﾅｯﾄ	2	(VFM200-375)
-	234A8-42571		NUT	ﾅｯﾄ	4	(VFM400-600)
44	214A8-42661		BOLT	ﾎﾞﾙﾄ	2	
45	24320-52001		NUT	ﾅｯﾄ	2	
46	282M8-32501		PLATE,KEY	ﾌﾟﾚｰﾄ	1	
47	01184-10020		BOLT	ﾎﾞﾙﾄ	2	
48	01103-14040		BOLT	ﾎﾞﾙﾄ	1	
49	02011-00014		WASHER	ﾜｯｼｬ	1	
50	23917-42191		SHIM,T-1.0	ｼﾑ	5	
51	22679-43831		SHIM,T-0.2	ｼﾑ	5	

FIG.209 MAST PIPING [VFM2N9]

(M7020560) マストパイピング

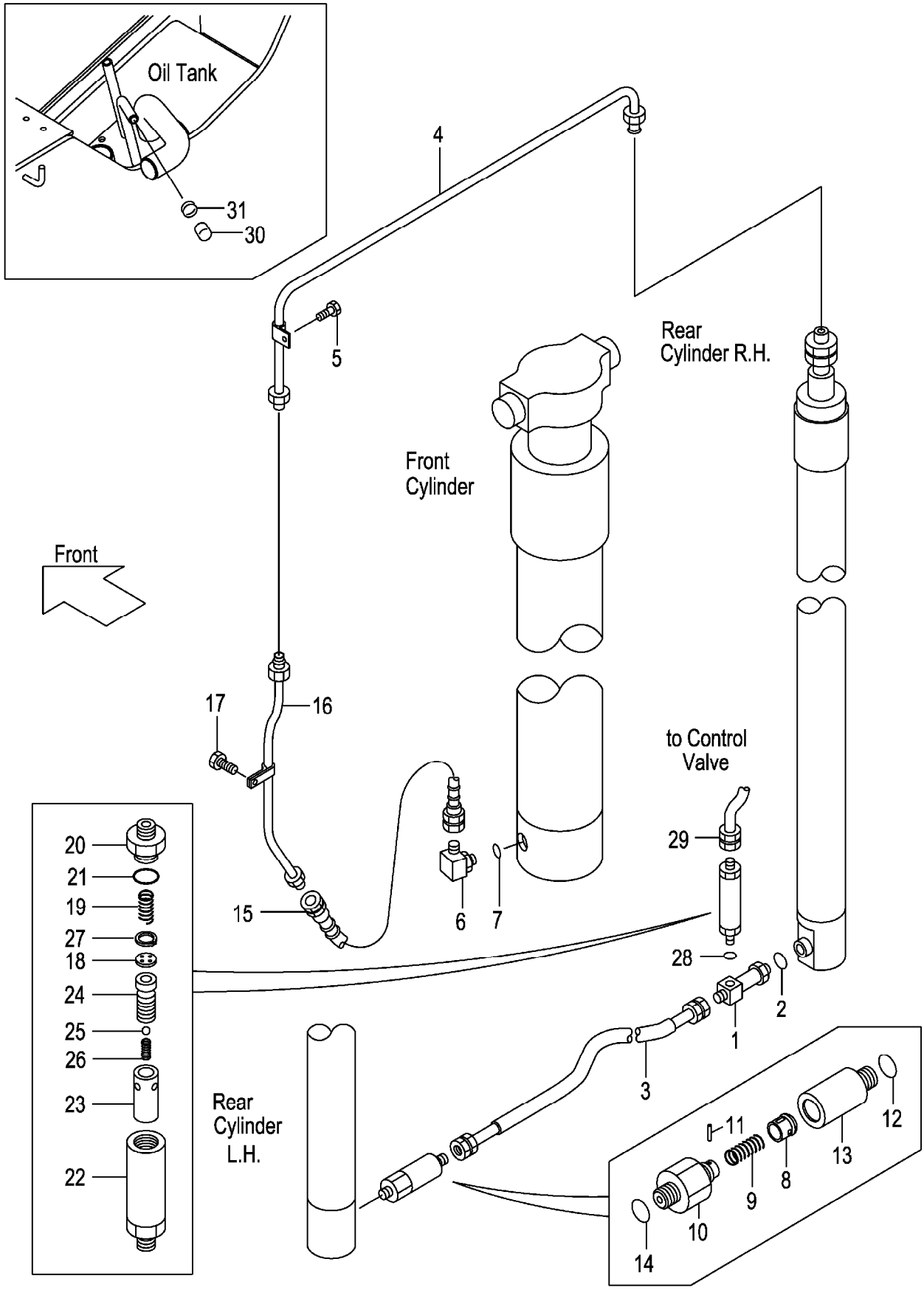

A:VFM2N9(3T)

Item No	Part No.	Mark	Description		Req'd	Remarks : Serial No.
A1	234A8-41101		THREE-WAY-ASSY	ｽﾘｰｳｪｲｱｯｾﾝ	1	INC.1,2
1	NO PART NO.	#	THREE-WAY	ｽﾘｰｳｪｲ	1	
2	03320-00140		O-RING	Oﾘﾝｸﾞ	1	
3	277T0-62071		HOSE	ﾎｰｽ	1	
4	277T0-62051		PIPE	ﾊﾟｲﾌﾟ	1	
5	01183-06016		BOLT	ﾎﾞﾙﾄ	1	
A2	04150-20404		ELBOW-ASSY	ｴﾙﾎﾞｱｯｾﾝ	1	INC.6,7
6	NO PART NO.	#	ELBOW	ｴﾙﾎﾞ	1	
7	03320-00180		O-RING	Oﾘﾝｸﾞ	1	
A3	234A0-62051		VALVE-ASSY,CUT	ｶｯﾄﾊﾞﾙﾌﾞｱｯｾﾝ	1	INC.8-14
A4	234A8-40701		VALVE-SUB-ASSY,CUT	ｶｯﾄﾊﾞﾙﾌﾞｻﾌﾞｱｯｾﾝ	1	INC.8-12
8	234A8-42602		PISTON	ﾋﾟｽﾄﾝ	1	
9	234A8-42611		SPRING	ｽﾌﾟﾘﾝｸﾞ	1	
10	234A8-42622		NIPPLE	ﾆｯﾌﾟﾙ	1	
11	02270-01014		PIN	ﾋﾟﾝ	1	
12	03320-00140		O-RING	Oﾘﾝｸﾞ	1	
13	234A0-62111		ADAPTER	ｱﾀﾞﾌﾟﾀ	1	
14	03320-00140		O-RING	Oﾘﾝｸﾞ	1	
15	214A0-62151		HOSE	ﾎｰｽ	1	
16	277T0-60311		PIPE VFM200	ﾊﾟｲﾌﾟ	1	
-	277T0-60321		PIPE VFM225	ﾊﾟｲﾌﾟ	1	
-	277T0-60331		PIPE VFM250	ﾊﾟｲﾌﾟ	1	
-	277T0-60341		PIPE VFM270	ﾊﾟｲﾌﾟ	1	
-	277T0-60351		PIPE VFM275	ﾊﾟｲﾌﾟ	1	
-	277T0-60301		PIPE VFM300	ﾊﾟｲﾌﾟ	1	
-	277T0-60361		PIPE VFM325	ﾊﾟｲﾌﾟ	1	
-	277T0-60371		PIPE VFM330	ﾊﾟｲﾌﾟ	1	
-	277T0-60381		PIPE VFM350	ﾊﾟｲﾌﾟ	1	
-	277T0-60391		PIPE VFM366	ﾊﾟｲﾌﾟ	1	
-	277T0-60401		PIPE VFM370	ﾊﾟｲﾌﾟ	1	
-	277T0-60411		PIPE VFM375	ﾊﾟｲﾌﾟ	1	
-	277T0-60421		PIPE VFM400	ﾊﾟｲﾌﾟ	1	
-	277T0-60431		PIPE VFM425	ﾊﾟｲﾌﾟ	1	
-	277T0-60441		PIPE VFM450	ﾊﾟｲﾌﾟ	1	
-	277T0-60451		PIPE VFM475	ﾊﾟｲﾌﾟ	1	
-	277T0-60461		PIPE VFM500	ﾊﾟｲﾌﾟ	1	
-	277T0-60471		PIPE VFM550	ﾊﾟｲﾌﾟ	1	
-	277T0-60481		PIPE VFM600	ﾊﾟｲﾌﾟ	1	
17	01183-06016		BOLT	ﾎﾞﾙﾄ	1	
A5	234F8-41001		REGULATOR-ASSY,FLOW	ﾌﾛｰﾚｷﾞｭﾚｰﾀｱｯｾﾝ	1	INC.18-27
18	NO PART NO.	#	PLATE	ﾌﾟﾚｰﾄ	1	
19	27979-43101		SPRING	ｽﾌﾟﾘﾝｸﾞ	1	
20	NO PART NO.	#	NIPPLE	ﾆｯﾌﾟﾙ	1	
21	03320-00280		O-RING	Oﾘﾝｸﾞ	1	
22	NO PART NO.	#	CASE	ｹｰｽ	1	
23	NO PART NO.	#	SLEEVE	ｽﾘｰﾌﾞ	1	
24	NO PART NO.	#	PISTON	ﾋﾟｽﾄﾝ	1	
25	24459-42951		BALL	ﾎﾞｰﾙ	1	
26	214A8-44151		SPRING	ｽﾌﾟﾘﾝｸﾞ	1	
27	02110-00018		RING,SNAP	ｽﾅｯﾌﾟﾘﾝｸﾞ	1	

FIG.209 MAST PIPING [VFM2N9]

(M7020560) マストパイピング

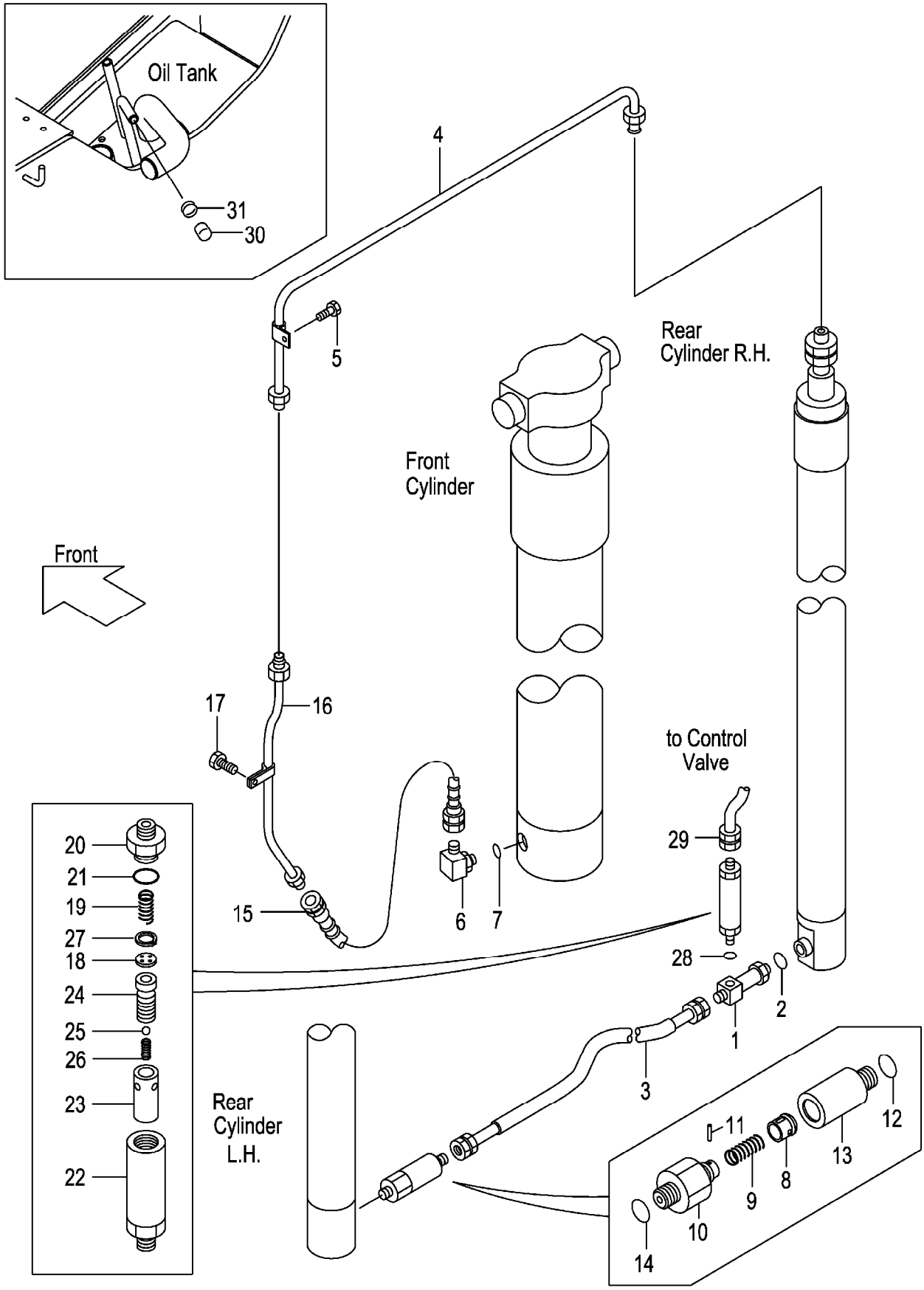

A:VFM2N9(3T)

Item No	Part No.	Mark	Description		Req'd	Remarks : Serial No.
28	03320-00180		O-RING	Oﾘﾝｸﾞ	1	
29	277N0-82021		HOSE	ﾎｰｽ	1	
30	55593-62551		CAP	ｷｬｯﾌﾟ	1	
31	04914-00019		CLIP	ｸﾘｯﾌﾟ	1	

M E M O

M E M O

FIG.210 FORK [VFHM2N9]

(M7028180) フォーク

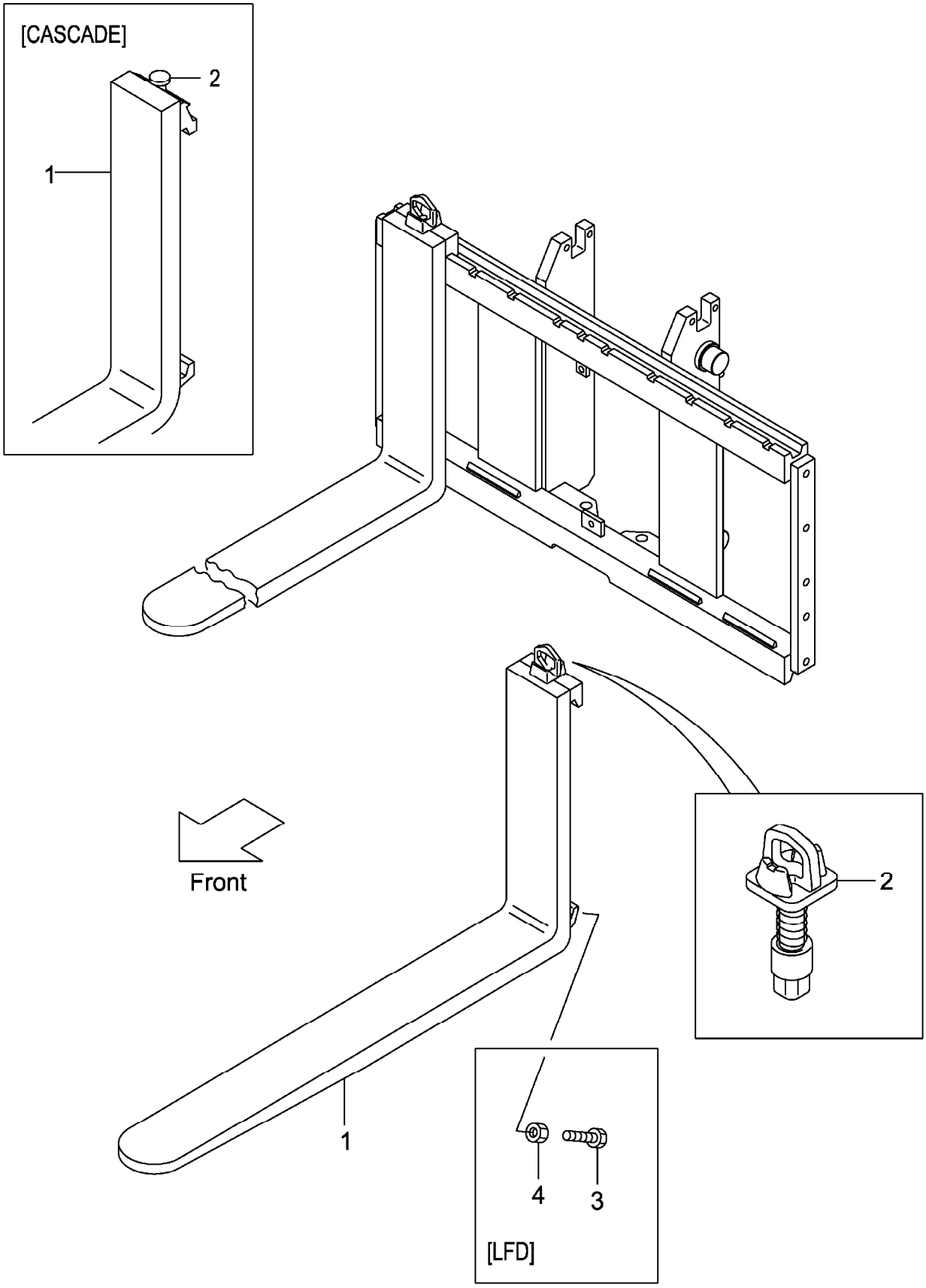

A:VFHM2N9(3T)

Item No	Part No.	Mark	Description		Req'd	Remarks : Serial No.
1	214J8-10501		FORK	ﾌｫｰｸ	2	(L=1070)
-	214J8-10581		FORK	ﾌｫｰｸ	2	[LF100]
-	214J8-10501		FORK	ﾌｫｰｸ	2	[LF107]
-	214J8-10591		FORK	ﾌｫｰｸ	2	[LF110]
-	214J8-10601		FORK	ﾌｫｰｸ	2	[LF120]
-	214J8-10511		FORK	ﾌｫｰｸ	2	[LF122]
-	214J8-10611		FORK	ﾌｫｰｸ	2	[LF130]
-	214J8-10521		FORK	ﾌｫｰｸ	2	[LF137]
-	214J8-10621		FORK	ﾌｫｰｸ	2	[LF140]
-	214J8-10631		FORK	ﾌｫｰｸ	2	[LF150]
-	214J8-10531		FORK	ﾌｫｰｸ	2	[LF152]
-	214J8-10641		FORK	ﾌｫｰｸ	2	[LF160]
-	214J8-10541		FORK	ﾌｫｰｸ	2	[LF167]
-	214J8-10651		FORK	ﾌｫｰｸ	2	[LF170]
-	214J8-10661		FORK	ﾌｫｰｸ	2	[LF180]
-	214J8-10551		FORK	ﾌｫｰｸ	2	[LF182]
-	214J8-10671		FORK	ﾌｫｰｸ	2	[LF190]
-	214J8-10561		FORK	ﾌｫｰｸ	2	[LF197]
-	214J8-10681		FORK	ﾌｫｰｸ	2	[LF200]
-	214J8-10571		FORK	ﾌｫｰｸ	2	[LF212]
-	234F8-10581		FORK	ﾌｫｰｸ	2	[LFD100]
-	234F8-10501		FORK	ﾌｫｰｸ	2	[LFD107]
-	234F8-10591		FORK	ﾌｫｰｸ	2	[LFD110]
-	234F8-10601		FORK	ﾌｫｰｸ	2	[LFD120]
-	234F8-10511		FORK	ﾌｫｰｸ	2	[LFD122]
-	234F8-10611		FORK	ﾌｫｰｸ	2	[LFD130]
-	234F8-10521		FORK	ﾌｫｰｸ	2	[LFD137]
-	234F8-10621		FORK	ﾌｫｰｸ	2	[LFD140]
-	234F8-10631		FORK	ﾌｫｰｸ	2	[LFD150]
-	234F8-10531		FORK	ﾌｫｰｸ	2	[LFD152]
-	234F8-10641		FORK	ﾌｫｰｸ	2	[LFD160]
-	234F8-10541		FORK	ﾌｫｰｸ	2	[LFD167]
-	234F8-10651		FORK	ﾌｫｰｸ	2	[LFD170]
-	234F8-10661		FORK	ﾌｫｰｸ	2	[LFD180]
-	234F8-10551		FORK	ﾌｫｰｸ	2	[LFD182]
-	234F8-10671		FORK	ﾌｫｰｸ	2	[LFD190]
-	234F8-10561		FORK	ﾌｫｰｸ	2	[LFD197]
-	234F8-10681		FORK	ﾌｫｰｸ	2	[LFD200]
-	234F8-10571		FORK	ﾌｫｰｸ	2	[LFD212]
-	22N98-10501		FORK	ﾌｫｰｸ	2	[LF107/CASCADE] INC.2
-	22N98-10511		FORK	ﾌｫｰｸ	2	[LF122/CASCADE] INC.2
2	214J8-11002		STOPPER,FORK	ｽﾄｯﾊﾟ	2	
-	W-K3PK-M		KIT,PIN,STOPPER	ｽﾄｯﾊﾟｷｯﾄ	2	[CASCADE]
3	234F8-12101		BOLT	ﾎﾞﾙﾄ	4	[LFD]
4	01402-00010		NUT	ﾅｯﾄ	4	[LFD]

FIG.211 LIFT BRACKET [VFHM2N9]

(M7020930) ﾘﾌﾄﾌﾞﾗｹｯﾄ

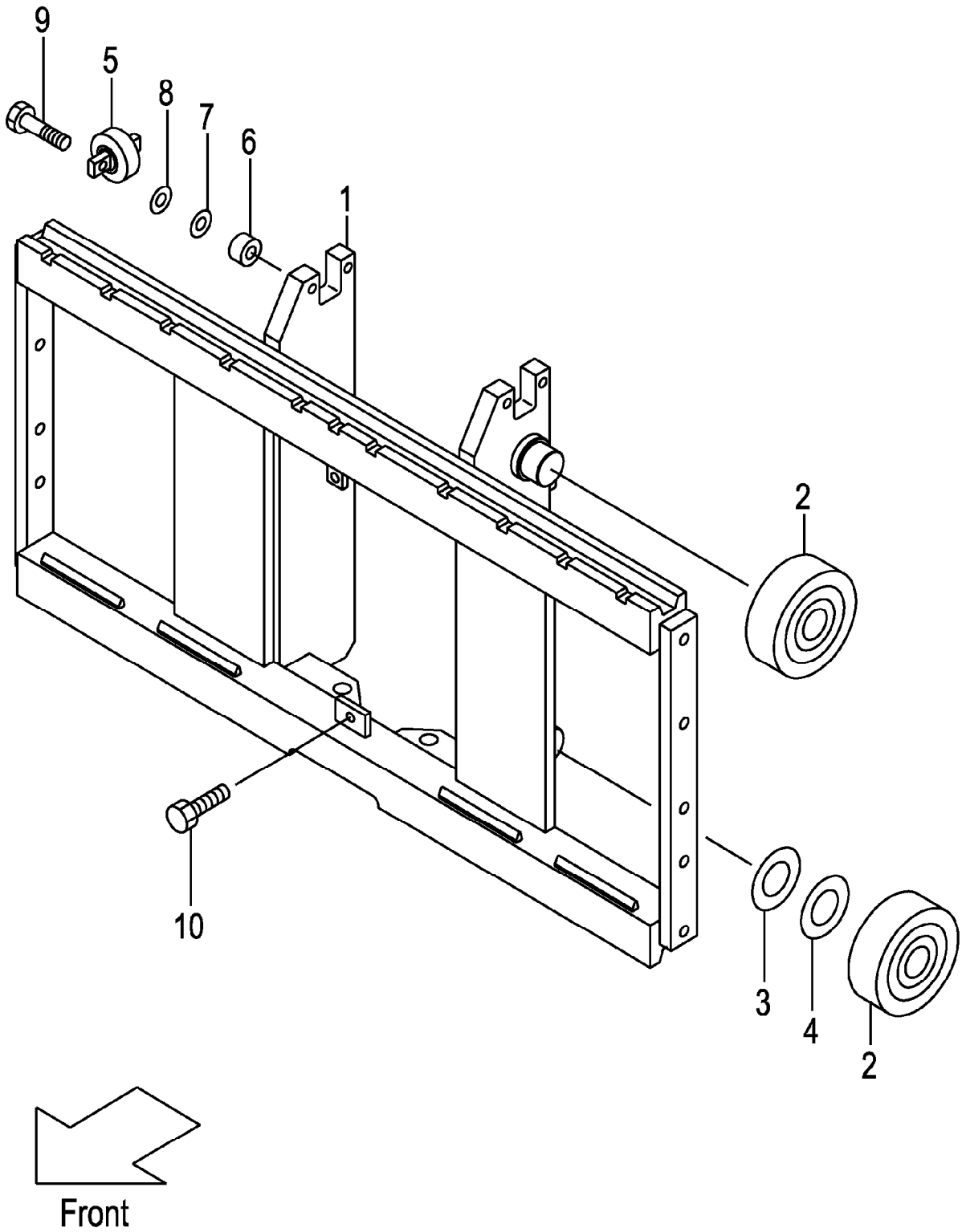

A:VFHM2N9(3T)

Item No	Part No.	Mark	Description		Req'd	Remarks : Serial No.
1	22N90-90101		BRACKET,LIFT	ﾌﾞﾗｹｯﾄ	1	
-	52N91-61301		BRACKET,LIFT	ﾌﾞﾗｹｯﾄ	1	[WFY110][WFY114][WFY127] [WFY135][WFY138]
-	52N91-61311		BRACKET,LIFT (L)	ﾌﾞﾗｹｯﾄ	1	[WFY135][WFY138][WFY145] [WFY146][WFY154][WFY180]
2	277P8-22051		ROLLER,END,119.0	ﾛｰﾗ	4	
-	577P3-74001		ROLLER,END,119.0	ﾛｰﾗ	4	[FC][CS35][FCS35][FCS45] [FCS55]
-	277P8-22061		ROLLER,END,119.5	ﾛｰﾗ	(4)	
-	577P3-74011		ROLLER,END,119.5	ﾛｰﾗ	(4)	[FC][CS35][FCS35][FCS45] [FCS55]
3	277P8-22071		SHIM,T-0.5	ｼﾑ	5	
4	277P8-22081		SHIM,T-1.0	ｼﾑ	5	
5	22N58-32701		ROLLER,SIDE	ﾛｰﾗ	2	
-	52N53-74001		ROLLER,SIDE	ﾛｰﾗ	2	[FC][CS35][FCS35][FCS45] [FCS55]
6	22N58-32711		SPACER	ｽﾍﾟｰｻ	4	
7	22018-30261		SHIM,T-0.5	ｼﾑ	4	
8	22018-30121		SHIM,T-1.0	ｼﾑ	4	
9	01103-10045		BOLT	ﾎﾞﾙﾄ	4	
10	01184-12025		BOLT	ﾎﾞﾙﾄ	1	
11	63110-18901	+	CHART,CAPACITY	ﾁｬｰﾄ	1	
-	63110-18911	+	CHART,CAPACITY	ﾁｬｰﾄ	1	[EXA]
-	524T3-84031	+	CHART,CAPACITY	ﾁｬｰﾄ	1	[EXR]
-	514A3-82301	+	CHART,CAPACITY	ﾁｬｰﾄ	1	[EXB][EXC][EXE][EXN][EXEEC] [EXNEC]
-	529F3-82101	+	CHART,CAPACITY	ﾁｬｰﾄ	1	[EXNEC/FINP]
-	529F3-82111	+	CHART,CAPACITY	ﾁｬｰﾄ	1	[EXNEC/SENP]
-	63110-18921	+	CHART,CAPACITY	ﾁｬｰﾄ	1	[EXB/CNP]
-	514A3-82341	+	CHART,CAPACITY	ﾁｬｰﾄ	1	[EXB/FNP][EXE/FNP][EXEEC/FNP]
-	514A3-82331	+	CHART,CAPACITY	ﾁｬｰﾄ	1	[EXB/SNP][EXE/SNP][EXEEC/SNP]
-	514A3-82361	+	CHART,CAPACITY	ﾁｬｰﾄ	1	[EXEEC/DNP][EXNEC/DNP]
-	514A3-82381	+	CHART,CAPACITY	ﾁｬｰﾄ	1	[EXEEC/GNP]
-	514A3-82371	+	CHART,CAPACITY	ﾁｬｰﾄ	1	[EXEEC/INP]
-	514A3-82351	+	CHART,CAPACITY	ﾁｬｰﾄ	1	[EXEEC/ONP]
-	514A3-82391	+	CHART,CAPACITY	ﾁｬｰﾄ	1	[EXEEC/PNP]
-	514A3-82321	+	CHART,CAPACITY	ﾁｬｰﾄ	1	[EXD][EXDEC]
12	02432-01008	+	RIVET	ﾘﾍﾞｯﾄ	4	

FIG.212 BACKREST [VFHM2N9]

(M7028290) ﾊﾞｯｸﾚｽﾄ

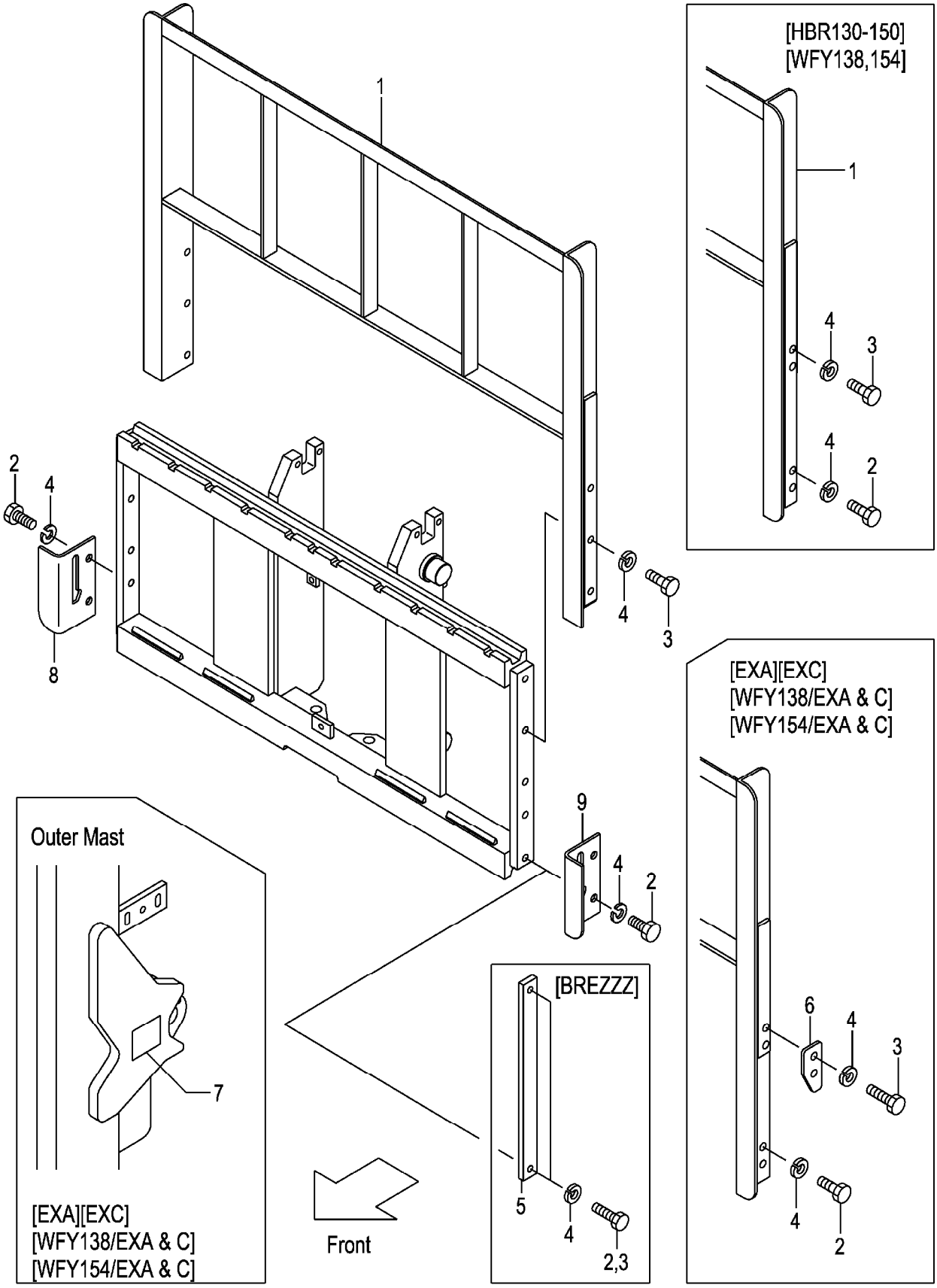

A:VFHM2N9(3T)

Item No	Part No.	Mark	Description		Req'd	Remarks : Serial No.
1	22N98-22001		BACKREST	ﾊﾞｯｸﾚｽﾄ	1	
-	234F8-22101		BACKREST	ﾊﾞｯｸﾚｽﾄ	1	[HBR130]
-	234F8-22111		BACKREST	ﾊﾞｯｸﾚｽﾄ	1	[HBR140]
-	234F8-22121		BACKREST	ﾊﾞｯｸﾚｽﾄ	1	[HBR150]
-	534F1-64401		BACKREST	ﾊﾞｯｸﾚｽﾄ	1	[WFY138]
-	534F1-64411		BACKREST	ﾊﾞｯｸﾚｽﾄ	1	[WFY154]
-	534F2-74001		BACKREST	ﾊﾞｯｸﾚｽﾄ	1	[EXA][EXC]
2	01100-14025		BOLT	ﾎﾞﾙﾄ	4	
-	01100-14030		BOLT	ﾎﾞﾙﾄ	4	[HBR130][HBR140][HBR150]
-	01100-14025		BOLT	ﾎﾞﾙﾄ	4	[WFY138][WFY154]
-	01100-14025		BOLT	ﾎﾞﾙﾄ	4	[EXA][EXC]
-	01100-14025		BOLT	ﾎﾞﾙﾄ	2	[BREZZZ]
3	01100-14030		BOLT	ﾎﾞﾙﾄ	6	
-	01100-14030		BOLT	ﾎﾞﾙﾄ	4	[HBR130][HBR140][HBR150]
-	01100-14030		BOLT	ﾎﾞﾙﾄ	4	[WFY138][WFY154]
-	01100-14035		BOLT	ﾎﾞﾙﾄ	4	[EXA][EXC](WFY138,WFY154) (EXA,EXC)
-	01100-14025		BOLT	ﾎﾞﾙﾄ	2	[BREZZZ]
4	02010-00014		WASHER	ﾜｯｼｬ	10	
-	02010-00014		WASHER	ﾜｯｼｬ	8	[EXA][EXC][HBR130-150] [WFY138][WFY154]
-	02010-00014		WASHER	ﾜｯｼｬ	8	(WFY138,WFY154)/(EXA,EXC)
-	02010-00014		WASHER	ﾜｯｼｬ	4	[BREZZZ]
5	24450-92021		PLATE	ﾌﾟﾚｰﾄ	2	[BREZZZ]
6	534A2-74051		PLATE,STOPPER	ﾌﾟﾚｰﾄ	2	[EXA][EXC](WFY138,WFY154) (EXA,EXC)
7	534A2-74301		DECAL,CAUTION	ﾃﾞｶﾙ	1	[EXA][EXC](WFY138,WFY154) (EXA,EXC)
8	22N98-22111		PLATE,UNDER,RH	ﾌﾟﾚｰﾄ	1	
9	22N98-22121		PLATE,UNDER,LH	ﾌﾟﾚｰﾄ	1	

FIG.213 MAST [VFHM2N9]

(M7020740) マスト

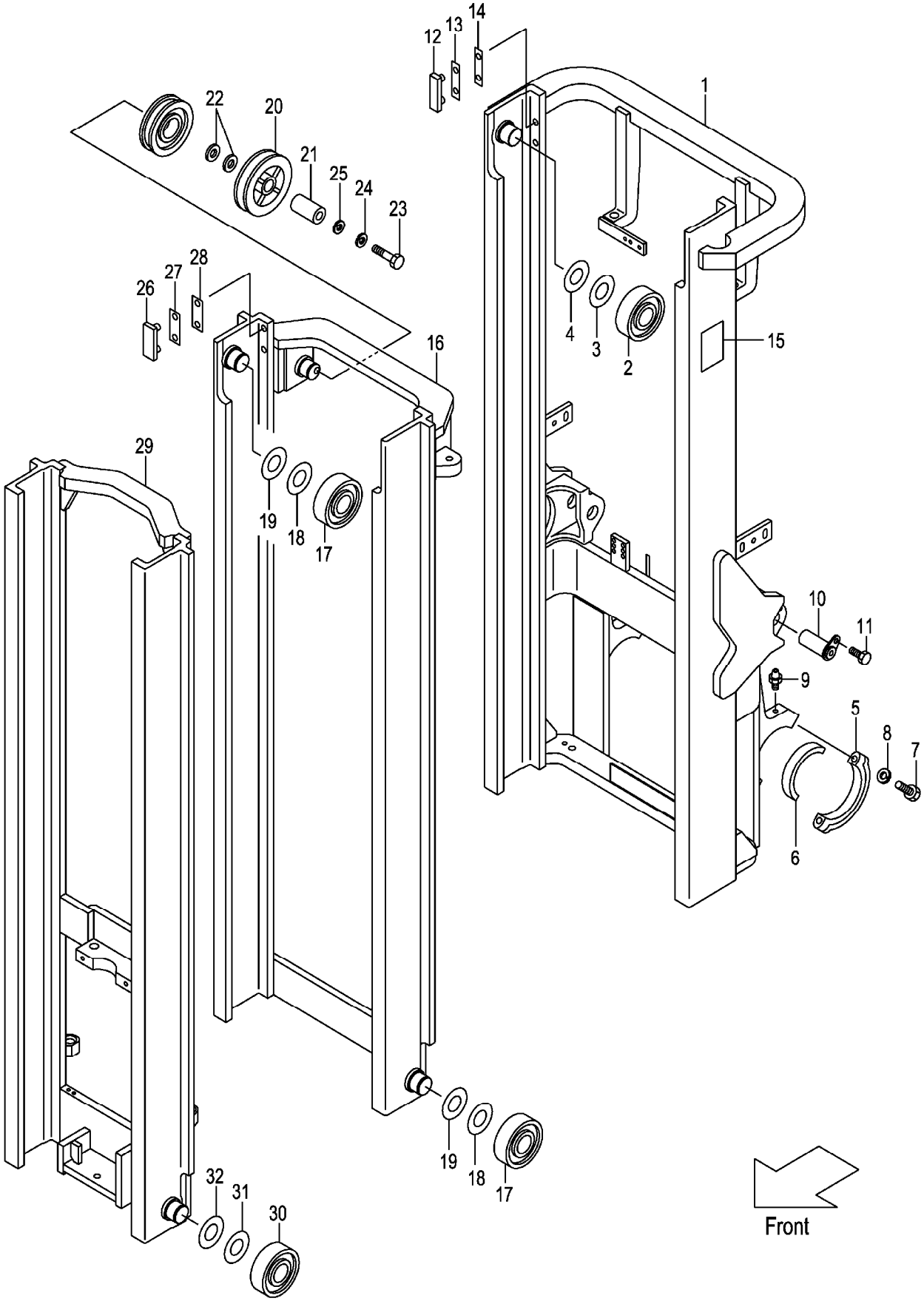

A:VFHM2N9(3T)

Item No	Part No.	Mark	Description		Req'd	Remarks : Serial No.
1	22N90-70211		MAST,OUTER VFHM360	ｱｳﾀﾏｽﾄ	1	
-	22N90-70221		MAST,OUTER VFHM400	ｱｳﾀﾏｽﾄ	1	
-	22N90-70201		MAST,OUTER VFHM435	ｱｳﾀﾏｽﾄ	1	
-	22N90-70231		MAST,OUTER VFHM480	ｱｳﾀﾏｽﾄ	1	
-	22N90-70241		MAST,OUTER VFHM500	ｱｳﾀﾏｽﾄ	1	
-	22N90-70251		MAST,OUTER VFHM540	ｱｳﾀﾏｽﾄ	1	
-	22N90-70261		MAST,OUTER VFHM550	ｱｳﾀﾏｽﾄ	1	
-	22N90-70271		MAST,OUTER VFHM600	ｱｳﾀﾏｽﾄ	1	
-	22N90-70281		MAST,OUTER VFHM650	ｱｳﾀﾏｽﾄ	1	
-	22N90-70291		MAST,OUTER VFHM700	ｱｳﾀﾏｽﾄ	1	
-	22N90-70301		MAST,OUTER VFHM750	ｱｳﾀﾏｽﾄ	1	
2	277P8-22051		ROLLER,END,119.0	ﾛｰﾗ	2	
-	577P3-74001		ROLLER,END,119.0	ﾛｰﾗ	2	[FC][CS35][FCS35][FCS45] [FCS55]
3	277P8-22071		SHIM,T-0.5	ｼﾑ	12	
4	277P8-22081		SHIM,T-1.0	ｼﾑ	12	
5	277P8-32701		CAP	ｷｬｯﾌﾟ	2	
6	214A8-02201		BUSHING	ﾌﾞｯｼﾝｸﾞ	2	
7	01103-16065		BOLT	ﾎﾞﾙﾄ	4	
8	02011-00016		WASHER	ﾜｯｼｬ	4	
9	04901-00100		FITTING	ﾌｨｯﾃｨﾝｸﾞ	2	
10	272K8-52201		PIN	ﾋﾟﾝ	2	
11	216G8-52301		BOLT	ﾎﾞﾙﾄ	2	
12	216G8-33401		SLIPPER	ｽﾘｯﾊﾟ	2	
13	216G8-33361		SHIM,T-0.5	ｼﾑ	8	
14	216G8-33371		SHIM,T-1.0	ｼﾑ	4	
15	23678-06002		PLATE,NAME	ﾌﾟﾚｰﾄ	1	
16	22N90-70411		MAST,MIDDLE VFHM360	ﾐﾄﾞﾙﾏｽﾄ	1	
-	22N90-70421		MAST,MIDDLE VFHM400	ﾐﾄﾞﾙﾏｽﾄ	1	
-	22N90-70401		MAST,MIDDLE VFHM435	ﾐﾄﾞﾙﾏｽﾄ	1	
-	22N90-70431		MAST,MIDDLE VFHM480	ﾐﾄﾞﾙﾏｽﾄ	1	
-	22N90-70441		MAST,MIDDLE VFHM500	ﾐﾄﾞﾙﾏｽﾄ	1	
-	22N90-70451		MAST,MIDDLE VFHM540	ﾐﾄﾞﾙﾏｽﾄ	1	
-	22N90-70461		MAST,MIDDLE VFHM550	ﾐﾄﾞﾙﾏｽﾄ	1	
-	22N90-70471		MAST,MIDDLE VFHM600	ﾐﾄﾞﾙﾏｽﾄ	1	
-	22N90-70481		MAST,MIDDLE VFHM650	ﾐﾄﾞﾙﾏｽﾄ	1	
-	22N90-70491		MAST,MIDDLE VFHM700	ﾐﾄﾞﾙﾏｽﾄ	1	
-	22N90-70501		MAST,MIDDLE VFHM750	ﾐﾄﾞﾙﾏｽﾄ	1	
17	277P8-22051		ROLLER,END,119.0	ﾛｰﾗ	4	
-	577P3-74001		ROLLER,END,119.0	ﾛｰﾗ	4	[FC][CS35][FCS35][FCS45] [FCS55]
-	277P8-22061		ROLLER,END,119.5	ﾛｰﾗ	(2)	
-	577P3-74011		ROLLER,END,119.5	ﾛｰﾗ	(2)	[FC][CS35][FCS35][FCS45] [FCS55]
18	277P8-22071		SHIM,T-0.5	ｼﾑ	15	
19	277P8-22081		SHIM,T-1.0	ｼﾑ	15	
20	63130-15301		PULLEY	ﾌﾟｰﾘ	1	
21	214A0-72701		COLLAR	ｶﾗｰ	1	
22	62050-12331		SPACER	ｽﾍﾟｰｻ	2	
23	01100-16060		BOLT	ﾎﾞﾙﾄ	1	

FIG.213 MAST [VFHM2N9]

(M7020740) マスト

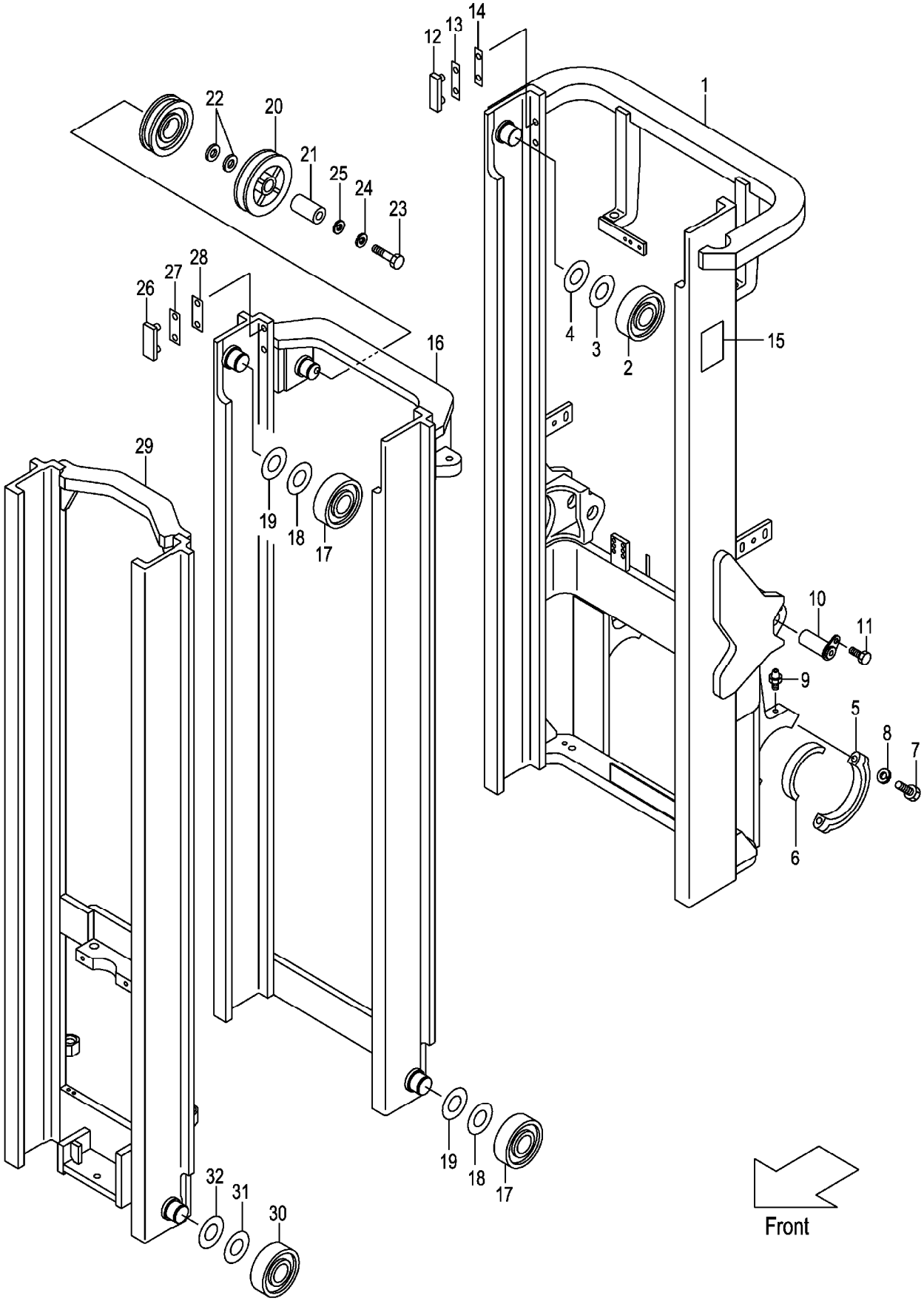

A:VFHM2N9(3T)

Item No	Part No.	Mark	Description		Req'd	Remarks : Serial No.
24	02010-00016		WASHER	ﾜｯｼｬ	1	
25	02000-00016		WASHER	ﾜｯｼｬ	1	
26	216G8-33351		SLIPPER	ｽﾘｯﾊﾟ	2	
27	216G8-33361		SHIM,T-0.5	ｼﾑ	4	
28	216G8-33371		SHIM,T-1.0	ｼﾑ	8	
29	22N90-70611		MAST,INNER VFHM360	ｲﾝﾅﾏｽﾄ	1	
-	22N90-70621		MAST,INNER VFHM400	ｲﾝﾅﾏｽﾄ	1	
-	22N90-70601		MAST,INNER VFHM435	ｲﾝﾅﾏｽﾄ	1	
-	22N90-70631		MAST,INNER VFHM480	ｲﾝﾅﾏｽﾄ	1	
-	22N90-70641		MAST,INNER VFHM500	ｲﾝﾅﾏｽﾄ	1	
-	22N90-70651		MAST,INNER VFHM540	ｲﾝﾅﾏｽﾄ	1	
-	22N90-70661		MAST,INNER VFHM550	ｲﾝﾅﾏｽﾄ	1	
-	22N90-70671		MAST,INNER VFHM600	ｲﾝﾅﾏｽﾄ	1	
-	22N90-70681		MAST,INNER VFHM650	ｲﾝﾅﾏｽﾄ	1	
-	22N90-70691		MAST,INNER VFHM700	ｲﾝﾅﾏｽﾄ	1	
-	22N90-70701		MAST,INNER VFHM750	ｲﾝﾅﾏｽﾄ	1	
30	277P8-22051		ROLLER,END,119.0	ﾛｰﾗ	2	
-	577P3-74001		ROLLER,END,119.0	ﾛｰﾗ	2	[FC][CS35][FCS35][FCS45] [FCS55]
-	277P8-22061		ROLLER,END,119.5	ﾛｰﾗ	(2)	
-	577P3-74011		ROLLER,END,119.5	ﾛｰﾗ	(2)	[FC][CS35][FCS35][FCS45] [FCS55]
31	277P8-22071		SHIM,T-0.5	ｼﾑ	12	
32	277P8-22081		SHIM,T-1.0	ｼﾑ	12	

M E M O

M E M O

FIG.214 TILT GAUGE [VFHM2N9/(TG,PPC,PR,PRC,MPC)]

(M7020750) ﾃｨﾙﾄｹﾞｰｼﾞ

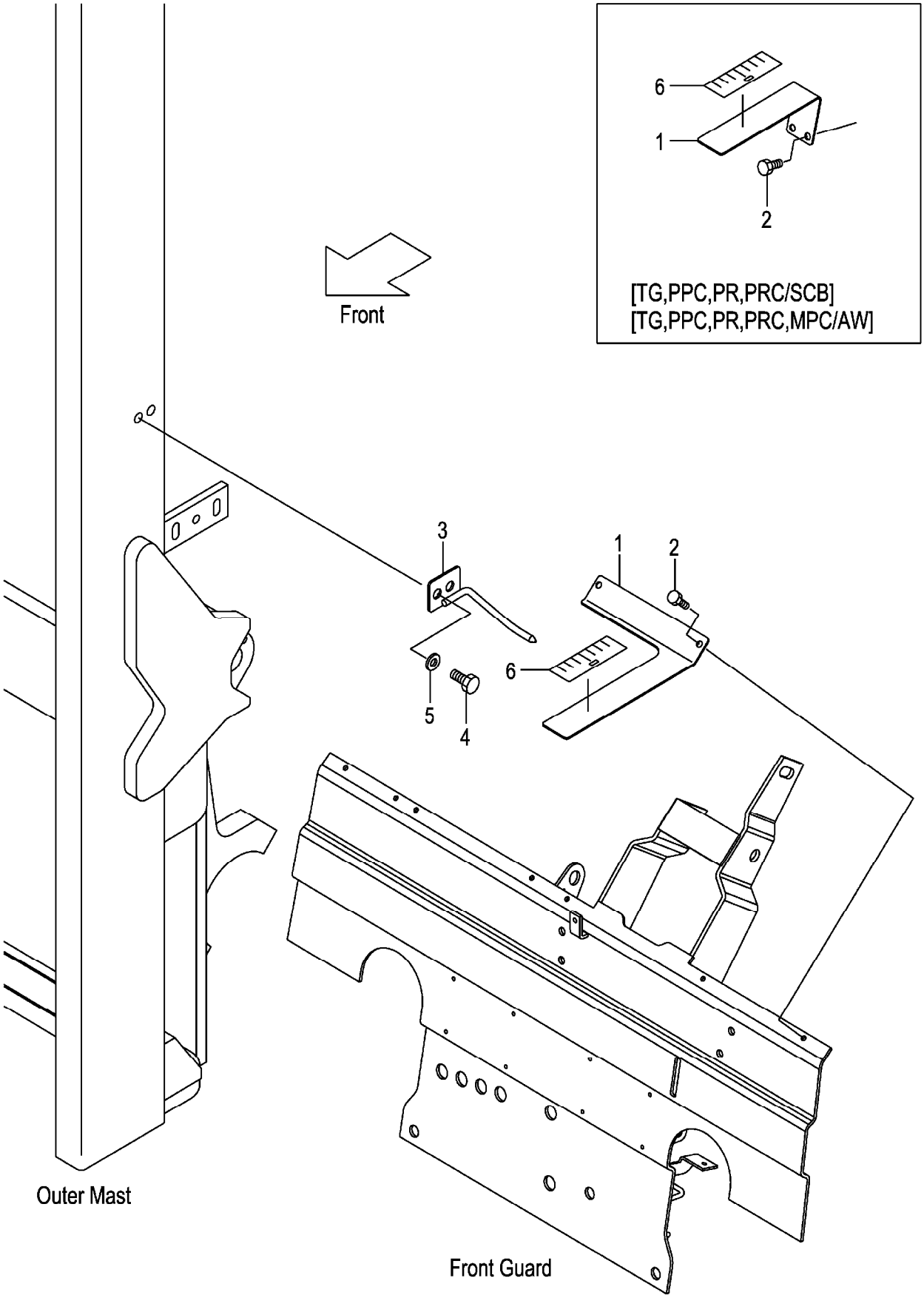

A:VFHM2N9(3T)

Item No	Part No.	Mark	Description		Req'd	Remarks : Serial No.
1	62A89-21811		GAUGE,TILT	ｹﾞｰｼﾞ	1	[TG][PPC][PR][PRC][MPC]
-	62A89-21831		GAUGE,TILT	ｹﾞｰｼﾞ	1	[TG/SCB][PPC/SCB][PR/SCB] [PRC/SCB][MPC/SCB]
-	62A89-21831		GAUGE,TILT	ｹﾞｰｼﾞ	1	[TG/AW][PPC/AW][PR/AW] [PRC/AW][MPC/AW]
2	01183-06020		BOLT	ﾎﾞﾙﾄ	2	
3	62A89-21851		INDICATOR	ｲﾝｼﾞｹｰﾀ	1	
4	01184-12025		BOLT	ﾎﾞﾙﾄ	2	
5	02000-00012		WASHER	ﾜｯｼｬ	2	
6	62459-23371		SEAL,GAUGE	ｼｰﾙ	1	

FIG.215 LIFT CYLINDER (FRONT) [VFHM2N9]

(M7020870) リフトシリンダ(フロント)

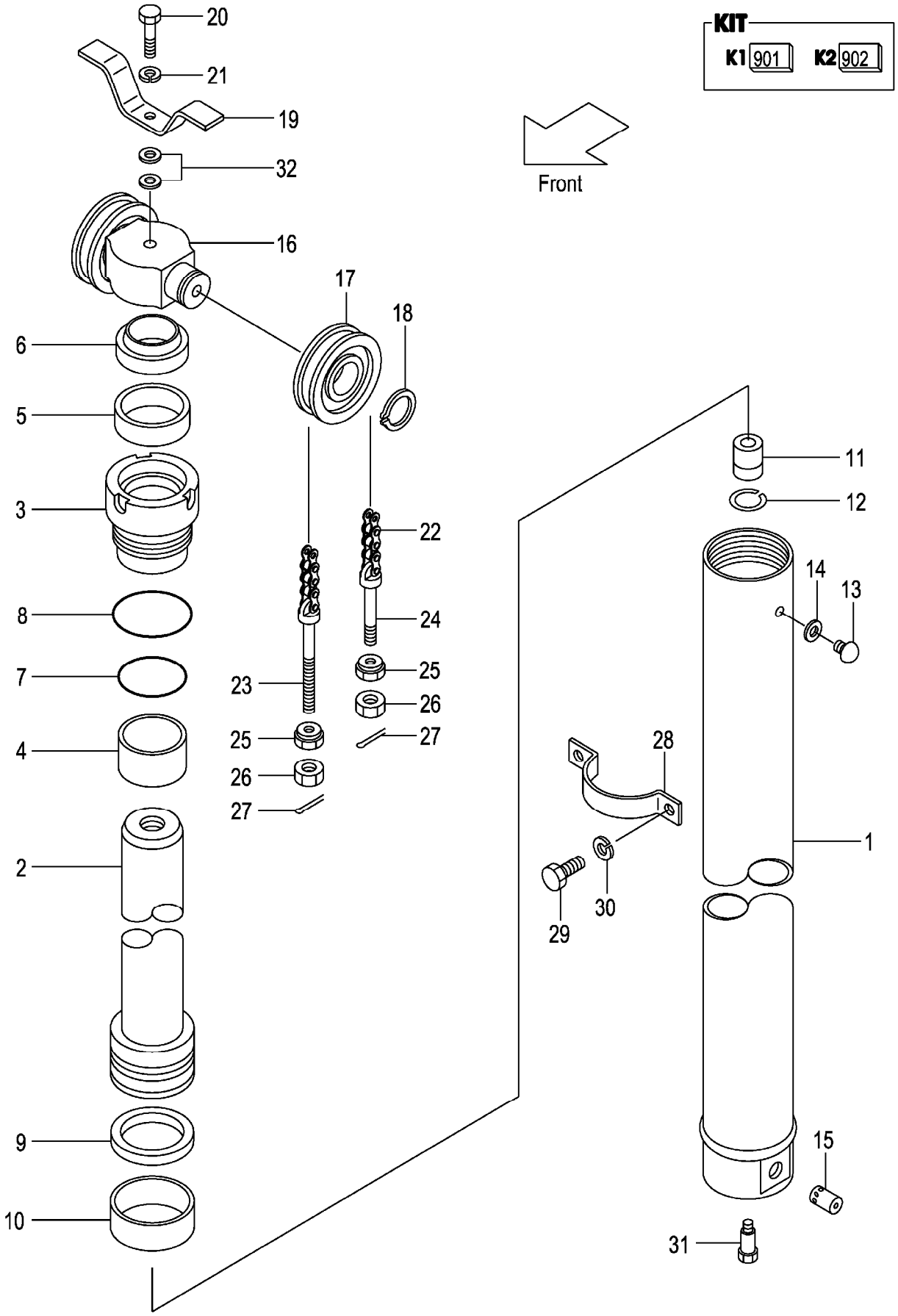

A:VFHM2N9(3T)

Item No	Part No.	Mark	Description		Req'd	Remarks : Serial No.
A1	212Y0-80511		CYL-ASSY,LIFT VFHM360	ﾘﾌﾄｼﾘﾝﾀﾞｱｯｾﾝ	1	INC.1-15
-	212Y0-80521		CYL-ASSY,LIFT VFHM400	ﾘﾌﾄｼﾘﾝﾀﾞｱｯｾﾝ	1	INC.1-15
-	212Y0-80531		CYL-ASSY,LIFT VFHM435	ﾘﾌﾄｼﾘﾝﾀﾞｱｯｾﾝ	1	INC.1-15
-	212Y0-80501		CYL-ASSY,LIFT VFHM480	ﾘﾌﾄｼﾘﾝﾀﾞｱｯｾﾝ	1	INC.1-15
-	212Y0-80541		CYL-ASSY,LIFT VFHM500	ﾘﾌﾄｼﾘﾝﾀﾞｱｯｾﾝ	1	INC.1-15
-	212Y0-80551		CYL-ASSY,LIFT VFHM540	ﾘﾌﾄｼﾘﾝﾀﾞｱｯｾﾝ	1	INC.1-15
-	212Y0-80561		CYL-ASSY,LIFT VFHM550	ﾘﾌﾄｼﾘﾝﾀﾞｱｯｾﾝ	1	INC.1-15
-	212Y0-80571		CYL-ASSY,LIFT VFHM600	ﾘﾌﾄｼﾘﾝﾀﾞｱｯｾﾝ	1	INC.1-15
-	212Y0-80581		CYL-ASSY,LIFT VFHM650	ﾘﾌﾄｼﾘﾝﾀﾞｱｯｾﾝ	1	INC.1-15
-	212Y0-80591		CYL-ASSY,LIFT VFHM700	ﾘﾌﾄｼﾘﾝﾀﾞｱｯｾﾝ	1	INC.1-15
-	212Y0-80601		CYL-ASSY,LIFT VFHM750	ﾘﾌﾄｼﾘﾝﾀﾞｱｯｾﾝ	1	INC.1-15
901	B-B685B-00005	K1	KIT,CYL-HEAD	ﾍｯﾄﾞｷｯﾄ	1	INC.3,4
902	B-B685A-00007	K2	KIT,REPAIR	ﾘﾍﾟｱｷｯﾄ	1	INC.5-10,14
1	B-B6717-89101		BODY,CYL VFHM360	ﾎﾞﾃﾞｨ	1	
-	B-B6717-89201		BODY,CYL VFHM400	ﾎﾞﾃﾞｨ	1	
-	B-B6717-89301		BODY,CYL VFHM435	ﾎﾞﾃﾞｨ	1	
-	B-B6717-89401		BODY,CYL VFHM480	ﾎﾞﾃﾞｨ	1	
-	B-B6717-89501		BODY,CYL VFHM500	ﾎﾞﾃﾞｨ	1	
-	B-B6717-89601		BODY,CYL VFHM540	ﾎﾞﾃﾞｨ	1	
-	B-B6717-89701		BODY,CYL VFHM550	ﾎﾞﾃﾞｨ	1	
-	B-B6717-89801		BODY,CYL VFHM600	ﾎﾞﾃﾞｨ	1	
-	B-B6717-89901		BODY,CYL VFHM650	ﾎﾞﾃﾞｨ	1	
-	B-B6717-90001		BODY,CYL VFHM700	ﾎﾞﾃﾞｨ	1	
-	B-B6717-90101		BODY,CYL VFHM750	ﾎﾞﾃﾞｨ	1	
2	B-B6717-89102		ROD VFHM360	ﾛｯﾄﾞ	1	
-	B-B6717-89202		ROD VFHM400	ﾛｯﾄﾞ	1	
-	B-B6717-89302		ROD VFHM435	ﾛｯﾄﾞ	1	
-	B-B6717-89402		ROD VFHM480	ﾛｯﾄﾞ	1	
-	B-B6717-89502		ROD VFHM500	ﾛｯﾄﾞ	1	
-	B-B6717-89602		ROD VFHM540	ﾛｯﾄﾞ	1	
-	B-B6717-89702		ROD VFHM550	ﾛｯﾄﾞ	1	
-	B-B6717-89802		ROD VFHM600	ﾛｯﾄﾞ	1	
-	B-B6717-89902		ROD VFHM650	ﾛｯﾄﾞ	1	
-	B-B6717-90002		ROD VFHM700	ﾛｯﾄﾞ	1	
-	B-B6717-90102		ROD VFHM750	ﾛｯﾄﾞ	1	
3	B-B6121-85007	*	HEAD	ﾍｯﾄﾞ	1	
4	B-30131-65012	*	BUSHING	ﾌﾞｯｼﾝｸﾞ	1	
5	B-30961-65013	*	U-RING	Uﾘﾝｸﾞ	1	
6	B-30191-65050	*	RING,WIPER	ﾘﾝｸﾞ	1	
7	B-95123-08000	*	O-RING	Oﾘﾝｸﾞ	1	
8	B-95151-08500	*	O-RING	Oﾘﾝｸﾞ	1	
9	B-B6983-85007	*	RING,SEAL	ﾘﾝｸﾞ	1	
10	B-30181-85002	*	RING,SLIDE	ﾘﾝｸﾞ	1	
11	B-C4300-22001		VALVE,CHECK	ﾊﾞﾙﾌﾞ	1	
12	B-94721-22101		RING,SNAP	ｽﾅｯﾌﾟﾘﾝｸﾞ	1	
13	B-B6521-90004		PLUG	ﾌﾟﾗｸﾞ	1	
14	B-B6711-00001	*	GASKET	ｶﾞｽｹｯﾄ	1	
15	B-26570-30125		VALVE	ﾊﾞﾙﾌﾞ	1	
16	212Y0-82001		HEAD,PISTON	ﾍｯﾄﾞ	1	
17	234A8-43501		SHEAVE	ｼｰﾌﾞ	2	

FIG.215 LIFT CYLINDER (FRONT) [VFHM2N9]

(M7020870) リフトシリンダ(フロント)

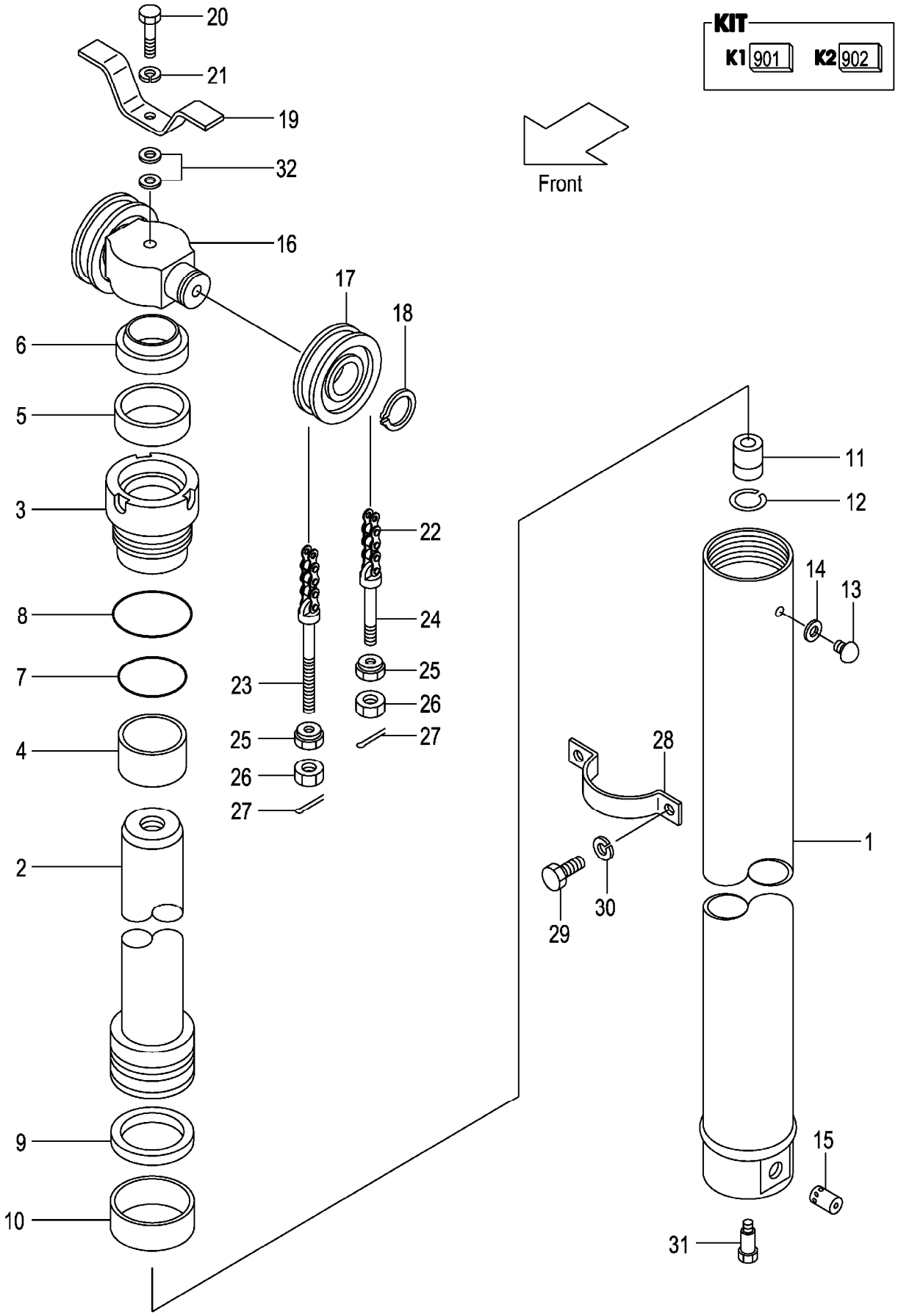

A:VFHM2N9(3T)

Item No	Part No.	Mark	Description		Req'd	Remarks : Serial No.
-	22208-40031		SHEAVE	ｼｰﾌﾞ	2	[FC][FCS35][FCS45][FCS55]
18	02100-00040		RING,SNAP	ｽﾅｯﾌﾟﾘﾝｸﾞ	2	
19	214A0-82681		STOPPER	ｽﾄｯﾊﾟ	1	
20	01100-16075		BOLT	ﾎﾞﾙﾄ	1	
21	02010-00016		WASHER	ﾜｯｼｬ	1	
22	22438-45471		CHAIN,LEAF VFHM360	ﾁｪｰﾝ	2	
-	22438-45531		CHAIN,LEAF VFHM400	ﾁｪｰﾝ	2	
-	22438-45571		CHAIN,LEAF VFHM435	ﾁｪｰﾝ	2	
-	22438-45631		CHAIN,LEAF VFHM480	ﾁｪｰﾝ	2	
-	22438-45671		CHAIN,LEAF VFHM500	ﾁｪｰﾝ	2	
-	22438-45731		CHAIN,LEAF VFHM540	ﾁｪｰﾝ	2	
-	22438-45731		CHAIN,LEAF VFHM550	ﾁｪｰﾝ	2	
-	22438-45811		CHAIN,LEAF VFHM600	ﾁｪｰﾝ	2	
-	22438-45891		CHAIN,LEAF VFHM650	ﾁｪｰﾝ	2	
-	22438-45991		CHAIN,LEAF VFHM700	ﾁｪｰﾝ	2	
-	22438-46051		CHAIN,LEAF VFHM750	ﾁｪｰﾝ	2	
-	09001-10039		CHAIN,LEAF VFHM360	ﾁｪｰﾝ	2	[FC][FCS35][FCS45][FCS55]
-	09001-10043		CHAIN,LEAF VFHM400	ﾁｪｰﾝ	2	[FC][FCS35][FCS45][FCS55]
-	09001-10047		CHAIN,LEAF VFHM435	ﾁｪｰﾝ	2	[FC][FCS35][FCS45][FCS55]
-	09001-10051		CHAIN,LEAF VFHM480	ﾁｪｰﾝ	2	[FC][FCS35][FCS45][FCS55]
-	09001-10053		CHAIN,LEAF VFHM500	ﾁｪｰﾝ	2	[FC][FCS35][FCS45][FCS55]
-	09001-10057		CHAIN,LEAF VFHM540	ﾁｪｰﾝ	2	[FC][FCS35][FCS45][FCS55]
-	09001-10059		CHAIN,LEAF VFHM550	ﾁｪｰﾝ	2	[FC][FCS35][FCS45][FCS55]
-	09001-10065		CHAIN,LEAF VFHM600	ﾁｪｰﾝ	2	[FC][FCS35][FCS45][FCS55]
-	09001-10071		CHAIN,LEAF VFHM650	ﾁｪｰﾝ	2	[FC][FCS35][FCS45][FCS55]
-	09001-10079		CHAIN,LEAF VFHM700	ﾁｪｰﾝ	2	[FC][FCS35][FCS45][FCS55]
-	09001-10083		CHAIN,LEAF VFHM750	ﾁｪｰﾝ	2	[FC][FCS35][FCS45][FCS55]
23	24459-42391		PIN,ANCHOR	ﾋﾟﾝ	2	
-	22218-42111		PIN,ANCHOR	ﾋﾟﾝ	2	[FC][FCS35][FCS45][FCS55]
24	24459-42381		PIN,ANCHOR	ﾋﾟﾝ	2	
-	231A0-82001		PIN,ANCHOR	ﾋﾟﾝ	2	[FC][FCS35][FCS45][FCS55]
25	22218-40191		NUT	ﾅｯﾄ	4	
26	01400-00018		NUT	ﾅｯﾄ	4	
27	02200-03030		PIN,COTTER	ﾋﾟﾝ	4	
28	212Y0-82101		SUPPORT	ｻﾎﾟｰﾄ	1	
29	01103-10018		BOLT	ﾎﾞﾙﾄ	2	
30	02011-00010		WASHER	ﾜｯｼｬ	2	
31	214A0-82831		BOLT	ﾎﾞﾙﾄ	1	
32	02000-20016		WASHER	ﾜｯｼｬ	2	

M E M O

M E M O

FIG.216 LIFT CYLINDER (REAR) [VFHM2N9]

(M7020880) リフトシリンダ(リヤー)

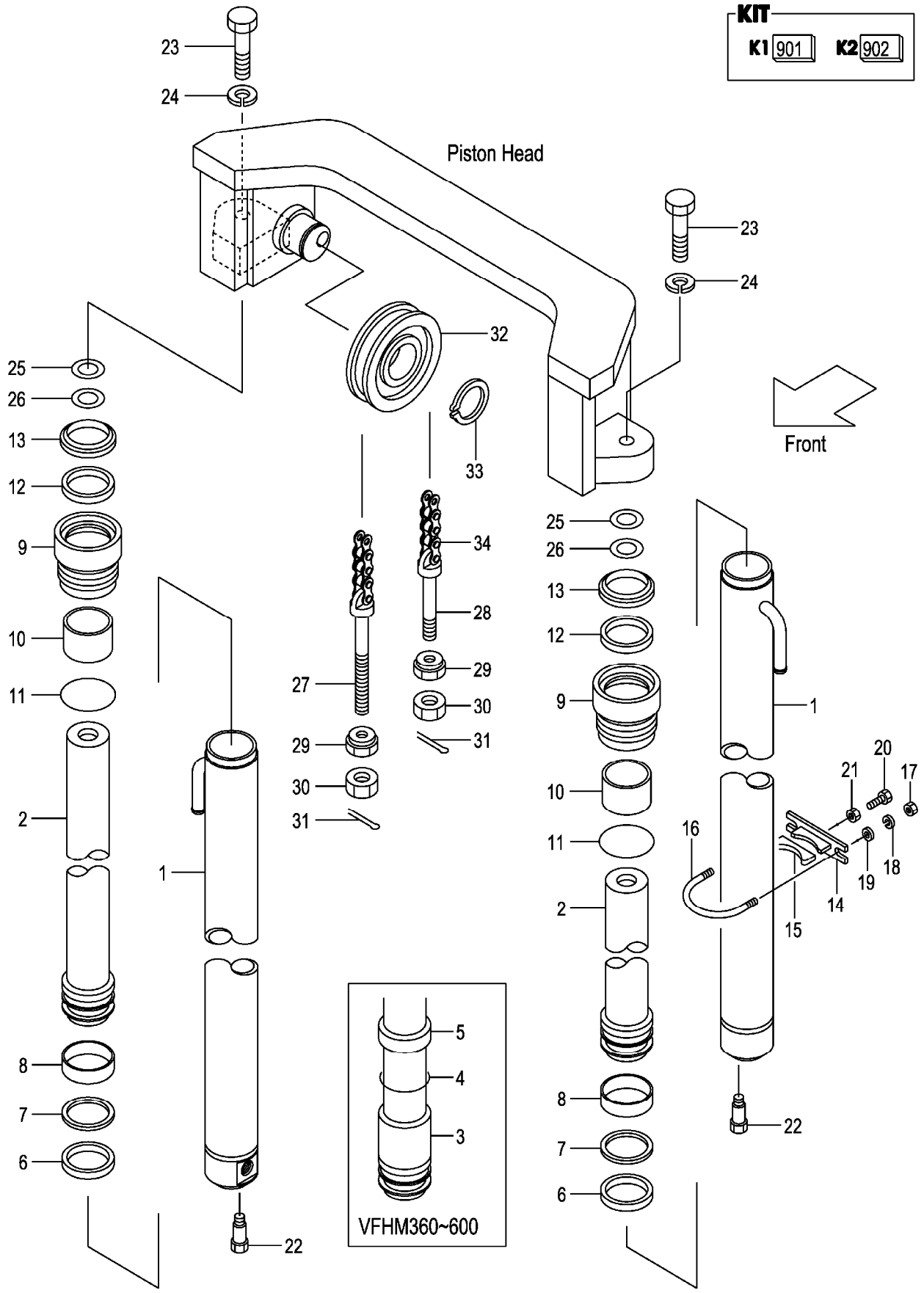

A:VFHM2N9(3T)

Item No	Part No.	Mark	Description		Req'd	Remarks : Serial No.
A1	22N90-81611		CYL-ASSY,LIFT VFHM360	ﾘﾌﾄｼﾘﾝﾀﾞｱｯｾﾝ	2	INC.1-13
-	22N90-81621		CYL-ASSY,LIFT VFHM400	ﾘﾌﾄｼﾘﾝﾀﾞｱｯｾﾝ	2	INC.1-13
-	22N90-81601		CYL-ASSY,LIFT VFHM435	ﾘﾌﾄｼﾘﾝﾀﾞｱｯｾﾝ	2	INC.1-13
-	22N90-81631		CYL-ASSY,LIFT VFHM480	ﾘﾌﾄｼﾘﾝﾀﾞｱｯｾﾝ	2	INC.1-13
-	22N90-81641		CYL-ASSY,LIFT VFHM500	ﾘﾌﾄｼﾘﾝﾀﾞｱｯｾﾝ	2	INC.1-13
-	22N90-81651		CYL-ASSY,LIFT VFHM540	ﾘﾌﾄｼﾘﾝﾀﾞｱｯｾﾝ	2	INC.1-13
-	22N90-81661		CYL-ASSY,LIFT VFHM550	ﾘﾌﾄｼﾘﾝﾀﾞｱｯｾﾝ	2	INC.1-13
-	22N90-81671		CYL-ASSY,LIFT VFHM600	ﾘﾌﾄｼﾘﾝﾀﾞｱｯｾﾝ	2	INC.1-13
-	22N90-81681		CYL-ASSY,LIFT VFHM650	ﾘﾌﾄｼﾘﾝﾀﾞｱｯｾﾝ	2	INC.1,2,6-13
-	22N90-81691		CYL-ASSY,LIFT VFHM700	ﾘﾌﾄｼﾘﾝﾀﾞｱｯｾﾝ	2	INC.1,2,6-13
-	22N90-81701		CYL-ASSY,LIFT VFHM750	ﾘﾌﾄｼﾘﾝﾀﾞｱｯｾﾝ	2	INC.1,2,6-13
901	B-3055B-00097	K1	KIT,CYL-HEAD	ﾍｯﾄﾞｷｯﾄ	2	INC.9,10
902	B-3055A-00058	K2	KIT,REPAIR	ﾘﾍﾟｱｷｯﾄ	2	INC.6,7,11-13
1	B-B6567-14601		BODY,CYL VFHM360	ﾎﾞﾃﾞｨ	2	
-	B-B6567-14701		BODY,CYL VFHM400	ﾎﾞﾃﾞｨ	2	
-	B-B6567-14801		BODY,CYL VFHM435	ﾎﾞﾃﾞｨ	2	
-	B-B6567-14901		BODY,CYL VFHM480	ﾎﾞﾃﾞｨ	2	
-	B-B6567-15001		BODY,CYL VFHM500	ﾎﾞﾃﾞｨ	2	
-	B-B6567-15101		BODY,CYL VFHM540	ﾎﾞﾃﾞｨ	2	
-	B-B6567-15201		BODY,CYL VFHM550	ﾎﾞﾃﾞｨ	2	
-	B-B6567-15301		BODY,CYL VFHM600	ﾎﾞﾃﾞｨ	2	
-	B-B6567-15401		BODY,CYL VFHM650	ﾎﾞﾃﾞｨ	2	
-	B-B6567-15501		BODY,CYL VFHM700	ﾎﾞﾃﾞｨ	2	
-	B-B6567-15601		BODY,CYL VFHM750	ﾎﾞﾃﾞｨ	2	
2	B-B6567-14602		ROD,PISTON VFHM360	ﾛｯﾄﾞ	2	
-	B-B6567-14702		ROD,PISTON VFHM400	ﾛｯﾄﾞ	2	
-	B-B6567-14802		ROD,PISTON VFHM435	ﾛｯﾄﾞ	2	
-	B-B6567-14902		ROD,PISTON VFHM480	ﾛｯﾄﾞ	2	
-	B-B6567-15002		ROD,PISTON VFHM500	ﾛｯﾄﾞ	2	
-	B-B6567-15102		ROD,PISTON VFHM540	ﾛｯﾄﾞ	2	
-	B-B6567-15202		ROD,PISTON VFHM550	ﾛｯﾄﾞ	2	
-	B-B6567-15302		ROD,PISTON VFHM600	ﾛｯﾄﾞ	2	
-	B-B6567-15402		ROD,PISTON VFHM650	ﾛｯﾄﾞ	2	
-	B-B6567-15502		ROD,PISTON VFHM700	ﾛｯﾄﾞ	2	
-	B-B6567-15602		ROD,PISTON VFHM750	ﾛｯﾄﾞ	2	
3	B-B6111-45079		SPACER	ｽﾍﾟｰｻ	2	(VFHM360-480)
-	B-B6111-45080		SPACER	ｽﾍﾟｰｻ	2	(VFHM500)
-	B-B6111-45081		SPACER	ｽﾍﾟｰｻ	2	(VFHM540)
-	B-B6111-45080		SPACER	ｽﾍﾟｰｻ	2	(VFHM550)
-	B-B6111-45075		SPACER	ｽﾍﾟｰｻ	2	(VFHM600)
4	B-95151-04500		O-RING	Oﾘﾝｸﾞ	2	(VFHM360-600)
5	B-30656-55008		WEARING	ｳｪｱﾘﾝｸﾞ	2	(VFHM360-600)
6	B-30161-55046	*	U-RING	Uﾘﾝｸﾞ	2	
7	B-30461-55039	*	RING,BACK-UP	ﾘﾝｸﾞ	2	
8	B-30131-55018		WEARING	ｳｪｱﾘﾝｸﾞ	2	
9	B-30121-55043	*	CAP,CYL	ｷｬｯﾌﾟ	2	
10	B-30131-45017	*	BUSHING	ﾌﾞｯｼﾝｸﾞ	2	
11	B-30161-91775	*	O-RING	Oﾘﾝｸﾞ	2	
12	B-30961-04512	*	PACKING	ﾊﾟｯｷﾝｸﾞ	2	
13	B-30191-45025	*	SEAL,DUST	ｼｰﾙ	2	

FIG.216 LIFT CYLINDER (REAR) [VFHM2N9]

(M7020880) リフトシリンダ(リヤー)

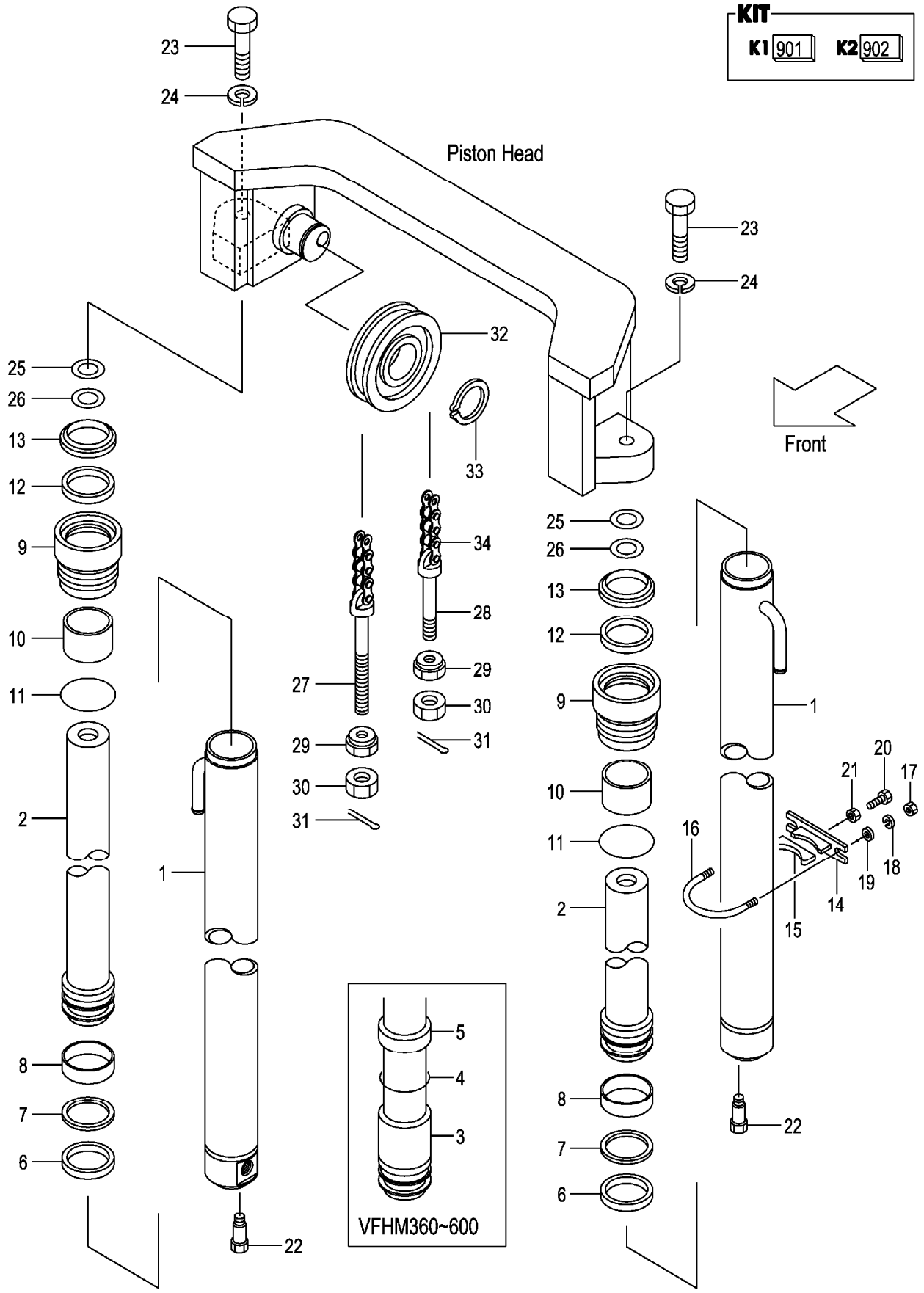

A:VFHM2N9(3T)

Item No	Part No.	Mark	Description		Req'd	Remarks : Serial No.
A2	215E8-42171		SUPPORT-ASSY	ｻﾎﾟｰﾄｱｯｾﾝ	2	(VFHM360-550) INC.14,15
-	215E8-42171		SUPPORT-ASSY	ｻﾎﾟｰﾄｱｯｾﾝ	4	(VFHM600-750) INC.14,15
14	215E8-42181		SUPPORT	ｻﾎﾟｰﾄ	2	(VFHM360-550)
-	215E8-42181		SUPPORT	ｻﾎﾟｰﾄ	4	(VFHM600-750)
15	24868-42111		RUBBER	ﾗﾊﾞｰ	2	(VFHM360-550)
-	24868-42111		RUBBER	ﾗﾊﾞｰ	4	(VFHM600-750)
16	234A8-42551		U-BOLT	Uﾎﾞﾙﾄ	2	(VFHM360-550)
-	234A8-42551		U-BOLT	Uﾎﾞﾙﾄ	4	(VFHM600-750)
17	234A8-42561		NUT	ﾅｯﾄ	4	(VFHM360-550)
-	234A8-42561		NUT	ﾅｯﾄ	8	(VFHM600-750)
18	02010-20010		WASHER	ﾜｯｼｬ	4	(VFHM360-550)
-	02010-20010		WASHER	ﾜｯｼｬ	8	(VFHM600-750)
19	02000-20010		WASHER	ﾜｯｼｬ	4	(VFHM360-550)
-	02000-20010		WASHER	ﾜｯｼｬ	8	(VFHM600-750)
20	232A8-42201		BOLT	ﾎﾞﾙﾄ	2	(VFHM360-550)
-	232A8-42201		BOLT	ﾎﾞﾙﾄ	4	(VFHM600-750)
21	234A8-42571		NUT	ﾅｯﾄ	2	(VFHM360-550)
-	234A8-42571		NUT	ﾅｯﾄ	4	(VFHM600-750)
22	214A8-42661		BOLT	ﾎﾞﾙﾄ	2	
23	01103-14040		BOLT	ﾎﾞﾙﾄ	2	
24	02011-00014		WASHER	ﾜｯｼｬ	2	
25	22517-40051		SHIM,T-1.0	ｼﾑ	10	
26	22717-40081		SHIM,T-0.5	ｼﾑ	10	
27	24459-42391		PIN,ANCHOR	ﾋﾟﾝ	2	
-	22218-42111		PIN,ANCHOR	ﾋﾟﾝ	2	[FC][FCS35][FCS45][FCS55]
28	215K0-82701		PIN,ANCHOR	ﾋﾟﾝ	2	
-	23658-42531		PIN,ANCHOR	ﾋﾟﾝ	2	[FC][FCS35][FCS45][FCS55]
29	22218-40191		NUT	ﾅｯﾄ	4	
30	01400-00018		NUT	ﾅｯﾄ	4	
31	02200-03030		PIN,COTTER	ﾋﾟﾝ	4	
32	234A8-43501		SHEAVE	ｼｰﾌﾞ	2	
-	22208-40031		SHEAVE	ｼｰﾌﾞ	2	[FC][FCS35][FCS45][FCS55]
33	02100-00040		RING,SNAP	ｽﾅｯﾌﾟﾘﾝｸﾞ	2	
34	22438-45631		CHAIN,LEAF VFHM360	ﾁｪｰﾝ	2	
-	22438-45691		CHAIN,LEAF VFHM400	ﾁｪｰﾝ	2	
-	22438-45731		CHAIN,LEAF VFHM435	ﾁｪｰﾝ	2	
-	22438-45791		CHAIN,LEAF VFHM480	ﾁｪｰﾝ	2	
-	22438-45831		CHAIN,LEAF VFHM500	ﾁｪｰﾝ	2	
-	22438-45891		CHAIN,LEAF VFHM540	ﾁｪｰﾝ	2	
-	22438-45891		CHAIN,LEAF VFHM550	ﾁｪｰﾝ	2	
-	22438-45971		CHAIN,LEAF VFHM600	ﾁｪｰﾝ	2	
-	22438-46051		CHAIN,LEAF VFHM650	ﾁｪｰﾝ	2	
-	22438-46151		CHAIN,LEAF VFHM700	ﾁｪｰﾝ	2	
-	22438-46211		CHAIN,LEAF VFHM750	ﾁｪｰﾝ	2	
-	09001-10051		CHAIN,ROLLER VFHM360	ﾁｪｰﾝ	2	[FC][FCS35][FCS45][FCS55]
-	09001-10055		CHAIN,ROLLER VFHM400	ﾁｪｰﾝ	2	[FC][FCS35][FCS45][FCS55]
-	09001-10059		CHAIN,ROLLER VFHM435	ﾁｪｰﾝ	2	[FC][FCS35][FCS45][FCS55]
-	09001-10063		CHAIN,ROLLER VFHM480	ﾁｪｰﾝ	2	[FC][FCS35][FCS45][FCS55]
-	09001-10067		CHAIN,ROLLER VFHM500	ﾁｪｰﾝ	2	[FC][FCS35][FCS45][FCS55]
-	09001-10071		CHAIN,ROLLER VFHM540	ﾁｪｰﾝ	2	[FC][FCS35][FCS45][FCS55]

FIG.216 LIFT CYLINDER (REAR) [VFHM2N9]

(M7020880) リフトシリンダ(リヤー)

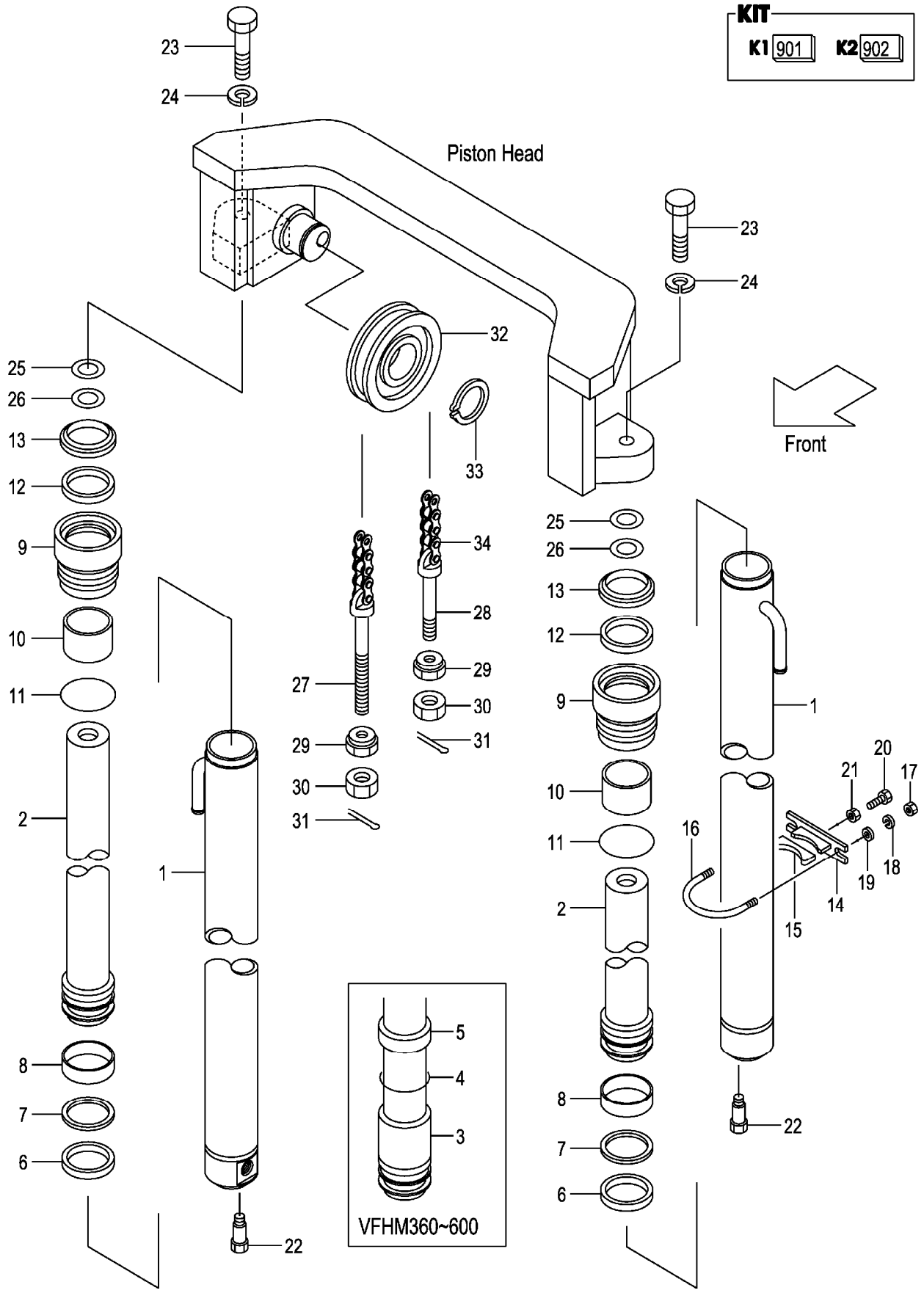

A:VFHM2N9(3T)

Item No	Part No.	Mark	Description	Req'd	Remarks : Serial No.
-	09001-10071		CHAIN,ROLLER VFHM550 ﾁｪｰﾝ	2	[FC][FCS35][FCS45][FCS55]
-	09001-10077		CHAIN,ROLLER VFHM600 ﾁｪｰﾝ	2	[FC][FCS35][FCS45][FCS55]
-	09001-10085		CHAIN,ROLLER VFHM650 ﾁｪｰﾝ	2	[FC][FCS35][FCS45][FCS55]
-	09001-10091		CHAIN,ROLLER VFHM700 ﾁｪｰﾝ	2	[FC][FCS35][FCS45][FCS55]
-	09001-10097		CHAIN,ROLLER VFHM750 ﾁｪｰﾝ	2	[FC][FCS35][FCS45][FCS55]

FIG.217 MAST PIPING [VFHM2N9]

(M7020890) マストパイピング

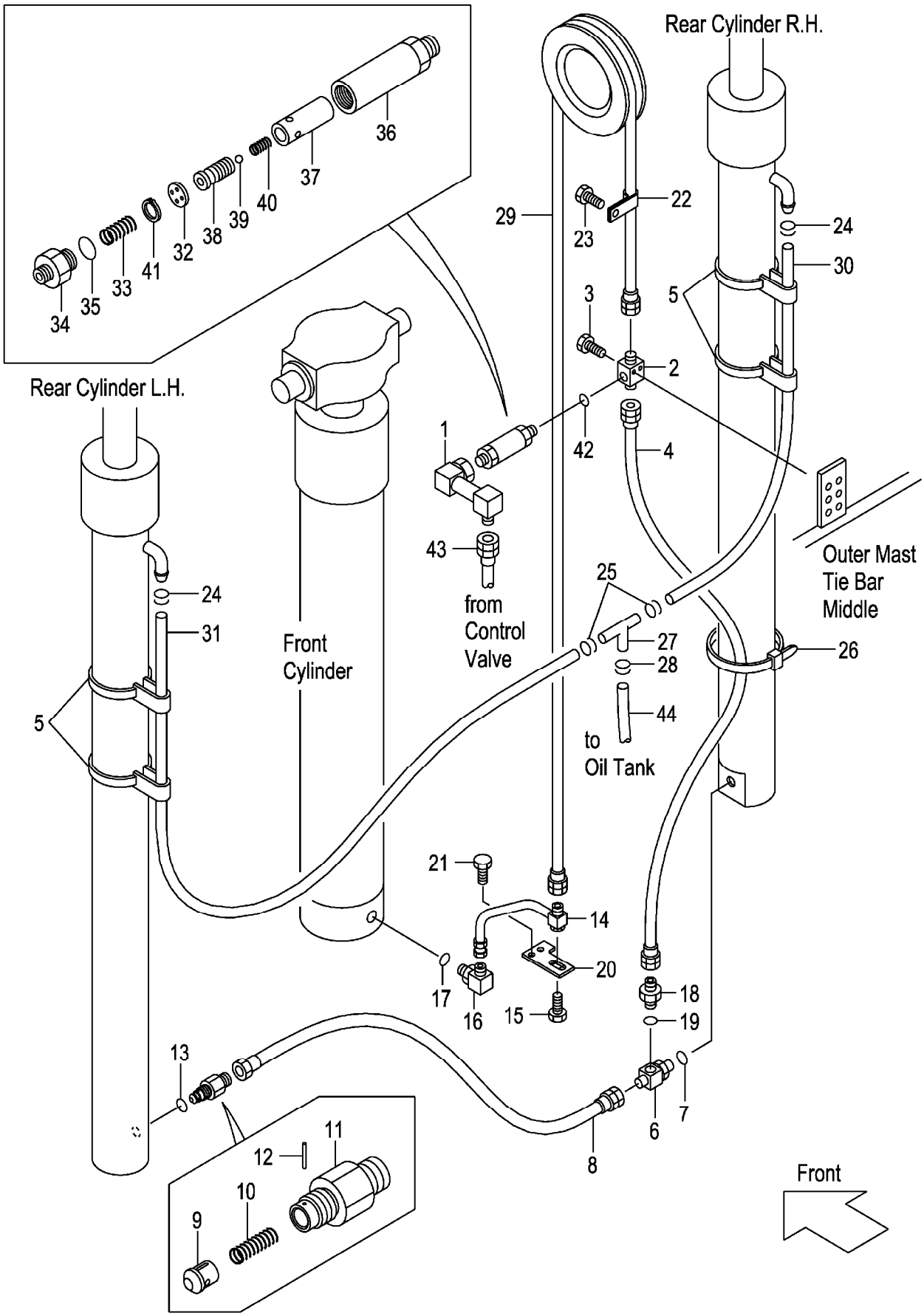

A:VFHM2N9(3T)

Item No	Part No.	Mark	Description		Req'd	Remarks : Serial No.
1	22N90-90161		PIPE	ﾊﾟｲﾌﾟ	1	
2	229F0-94101		THREE-WAY	ｽﾘｰｳｪｲ	1	
3	01184-10040		BOLT	ﾎﾞﾙﾄ	2	
4	216G0-93151		HOSE	ﾎｰｽ	1	
5	22N58-45001		BAND	ﾊﾞﾝﾄﾞ	4	
A1	216G0-93101		THREE-WAY-ASSY	ｽﾘｰｳｪｲｱｯｾﾝ	1	INC.6,7
6	NO PART NO.	#	THREE-WAY	ｽﾘｰｳｪｲ	1	
7	03320-00140		O-RING	Oﾘﾝｸﾞ	1	
8	22N50-92101		HOSE	ﾎｰｽ	1	
A2	234A8-40701		VALVE-ASSY,CUT	ｶｯﾄﾊﾞﾙﾌﾞｱｯｾﾝ	1	INC.9-13
9	234A8-42602		PISTON	ﾋﾟｽﾄﾝ	1	
10	234A8-42611		SPRING	ｽﾌﾟﾘﾝｸﾞ	1	
11	234A8-42622		NIPPLE	ﾆｯﾌﾟﾙ	1	
12	02270-01014		PIN	ﾋﾟﾝ	1	
13	03320-00140		O-RING	Oﾘﾝｸﾞ	1	
14	22N90-90152		PIPE	ﾊﾟｲﾌﾟ	1	
15	01186-10020		BOLT	ﾎﾞﾙﾄ	1	
A3	04150-20404		ELBOW-ASSY	ｴﾙﾎﾞｱｯｾﾝ	1	INC.16,17
16	NO PART NO.	#	ELBOW	ｴﾙﾎﾞ	1	
17	03320-00180		O-RING	Oﾘﾝｸﾞ	1	
A4	04134-20404		NIPPLE-ASSY	ﾆｯﾌﾟﾙｱｯｾﾝ	1	INC.18,19
18	NO PART NO.	#	NIPPLE	ﾆｯﾌﾟﾙ	1	
19	03320-00180		O-RING	Oﾘﾝｸﾞ	1	
20	22N50-73191		PLATE	ﾌﾟﾚｰﾄ	1	
21	01185-08020		BOLT	ﾎﾞﾙﾄ	2	
22	26602-42101		CLIP	ｸﾘｯﾌﾟ	1	
23	01184-10012		BOLT	ﾎﾞﾙﾄ	1	
24	24329-46201		CLIP	ｸﾘｯﾌﾟ	2	
25	04911-00021		CLIP	ｸﾘｯﾌﾟ	2	
26	25790-94021		BAND,HOSE	ﾊﾞﾝﾄﾞ	1	
27	53675-55051		THREE-WAY	ｽﾘｰｳｪｲ	1	
28	04911-00021		CLIP	ｸﾘｯﾌﾟ	2	
29	04601-44241		HOSE,HP VFHM360	ﾎｰｽ	1	
-	04601-44266		HOSE,HP VFHM400	ﾎｰｽ	1	
-	04601-44290		HOSE,HP VFHM435	ﾎｰｽ	1	
-	04601-44320		HOSE,HP VFHM480	ﾎｰｽ	1	
-	04601-44339		HOSE,HP VFHM500	ﾎｰｽ	1	
-	04601-44364		HOSE,HP VFHM540	ﾎｰｽ	1	
-	04601-44371		HOSE,HP VFHM550	ﾎｰｽ	1	
-	04601-44408		HOSE,HP VFHM600	ﾎｰｽ	1	
-	04601-44450		HOSE,HP VFHM650	ﾎｰｽ	1	
-	04601-44493		HOSE,HP VFHM700	ﾎｰｽ	1	
-	04601-44525		HOSE,HP VFHM750	ﾎｰｽ	1	
30	04710-04150		HOSE,RH VFHM360	ﾎｰｽ	1	
-	04710-04165		HOSE,RH VFHM400	ﾎｰｽ	1	
-	04710-04175		HOSE,RH VFHM435	ﾎｰｽ	1	
-	04710-04190		HOSE,RH VFHM480	ﾎｰｽ	1	
-	04710-04200		HOSE,RH VFHM500	ﾎｰｽ	1	
-	04710-04215		HOSE,RH VFHM540	ﾎｰｽ	1	
-	04710-04200		HOSE,RH VFHM550	ﾎｰｽ	1	

FIG.217 MAST PIPING [VFHM2N9]

(M7020890) マストパイピング

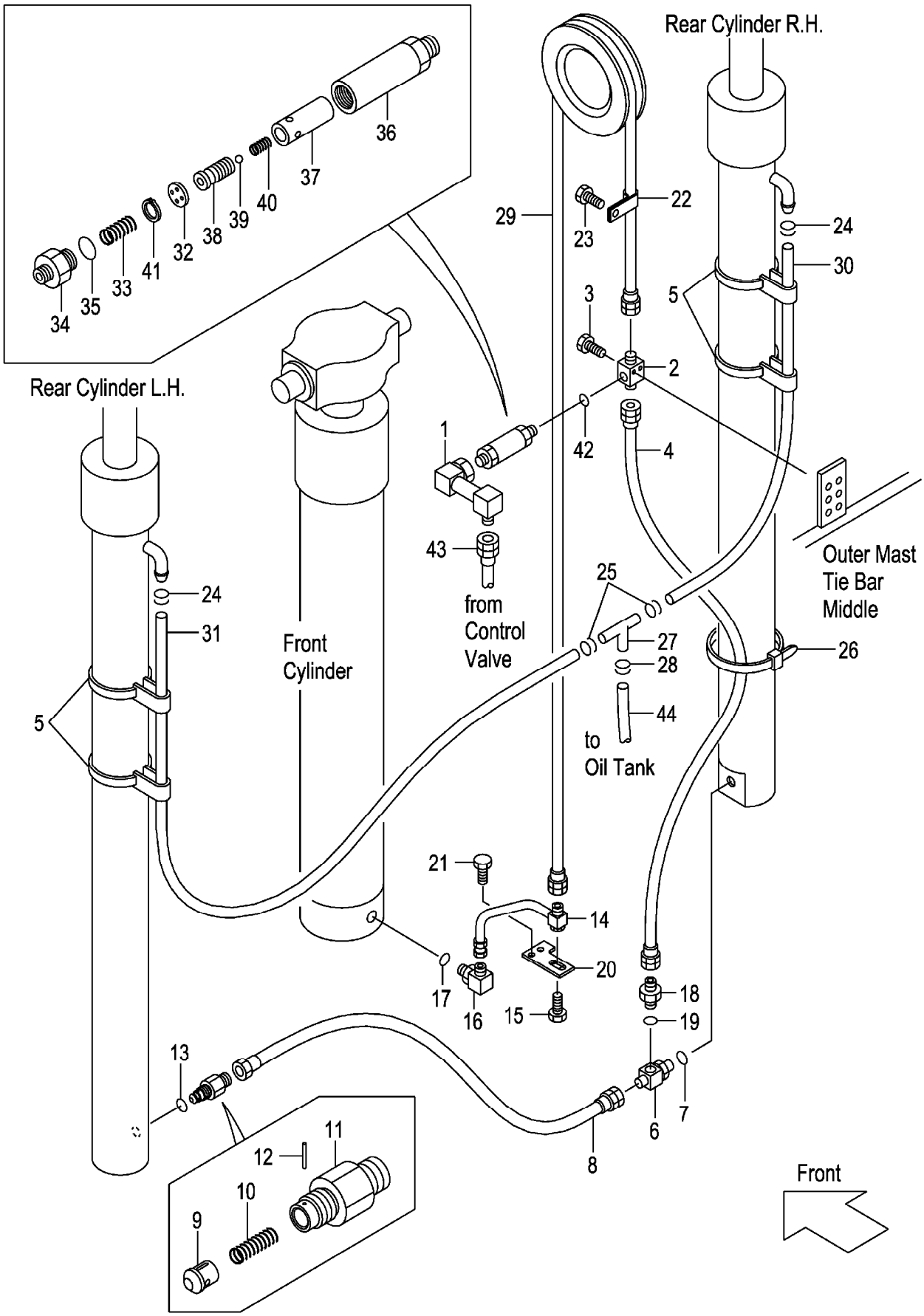

A:VFHM2N9(3T)

Item No	Part No.	Mark	Description		Req'd	Remarks : Serial No.
-	04710-04235		HOSE,RH VFHM600	ﾎｰｽ	1	
-	04710-04260		HOSE,RH VFHM650	ﾎｰｽ	1	
-	04710-04280		HOSE,RH VFHM700	ﾎｰｽ	1	
-	04710-04295		HOSE,RH VFHM750	ﾎｰｽ	1	
31	04710-04155		HOSE,LH VFHM360	ﾎｰｽ	1	
-	04710-04170		HOSE,LH VFHM400	ﾎｰｽ	1	
-	04710-04180		HOSE,LH VFHM435	ﾎｰｽ	1	
-	04710-04195		HOSE,LH VFHM480	ﾎｰｽ	1	
-	04710-04205		HOSE,LH VFHM500	ﾎｰｽ	1	
-	04710-04220		HOSE,LH VFHM540	ﾎｰｽ	1	
-	04710-04225		HOSE,LH VFHM550	ﾎｰｽ	1	
-	04710-04240		HOSE,LH VFHM600	ﾎｰｽ	1	
-	04710-04265		HOSE,LH VFHM650	ﾎｰｽ	1	
-	04710-04285		HOSE,LH VFHM700	ﾎｰｽ	1	
-	04710-04300		HOSE,LH VFHM750	ﾎｰｽ	1	
A5	234F8-41001		REGULATOR-ASSY,FLOW	ﾌﾛｰﾚｷﾞｭﾚｰﾀｱｯｾﾝ	1	INC.32-41
32	NO PART NO.	#	PLATE	ﾌﾟﾚｰﾄ	1	
33	27979-43101		SPRING	ｽﾌﾟﾘﾝｸﾞ	1	
34	NO PART NO.	#	NIPPLE	ﾆｯﾌﾟﾙ	1	
35	03300-00280		O-RING	Oﾘﾝｸﾞ	1	
36	NO PART NO.	#	CASE	ｹｰｽ	1	
37	NO PART NO.	#	SLEEVE	ｽﾘｰﾌﾞ	1	
38	NO PART NO.	#	PISTON	ﾋﾟｽﾄﾝ	1	
39	24459-42951		BALL,NYLON	ﾎﾞｰﾙ	1	
40	214A8-44151		SPRING	ｽﾌﾟﾘﾝｸﾞ	1	
41	02110-00018		RING,SNAP	ｽﾅｯﾌﾟﾘﾝｸﾞ	1	
42	03320-00180		O-RING	Oﾘﾝｸﾞ	1	
43	277N0-82021		HOSE	ﾎｰｽ	1	
44	04710-04150		HOSE	ﾎｰｽ	1	

M E M O

M E M O

FIG.218 FORK [VFHM2N8]

(M7028190) フォーク

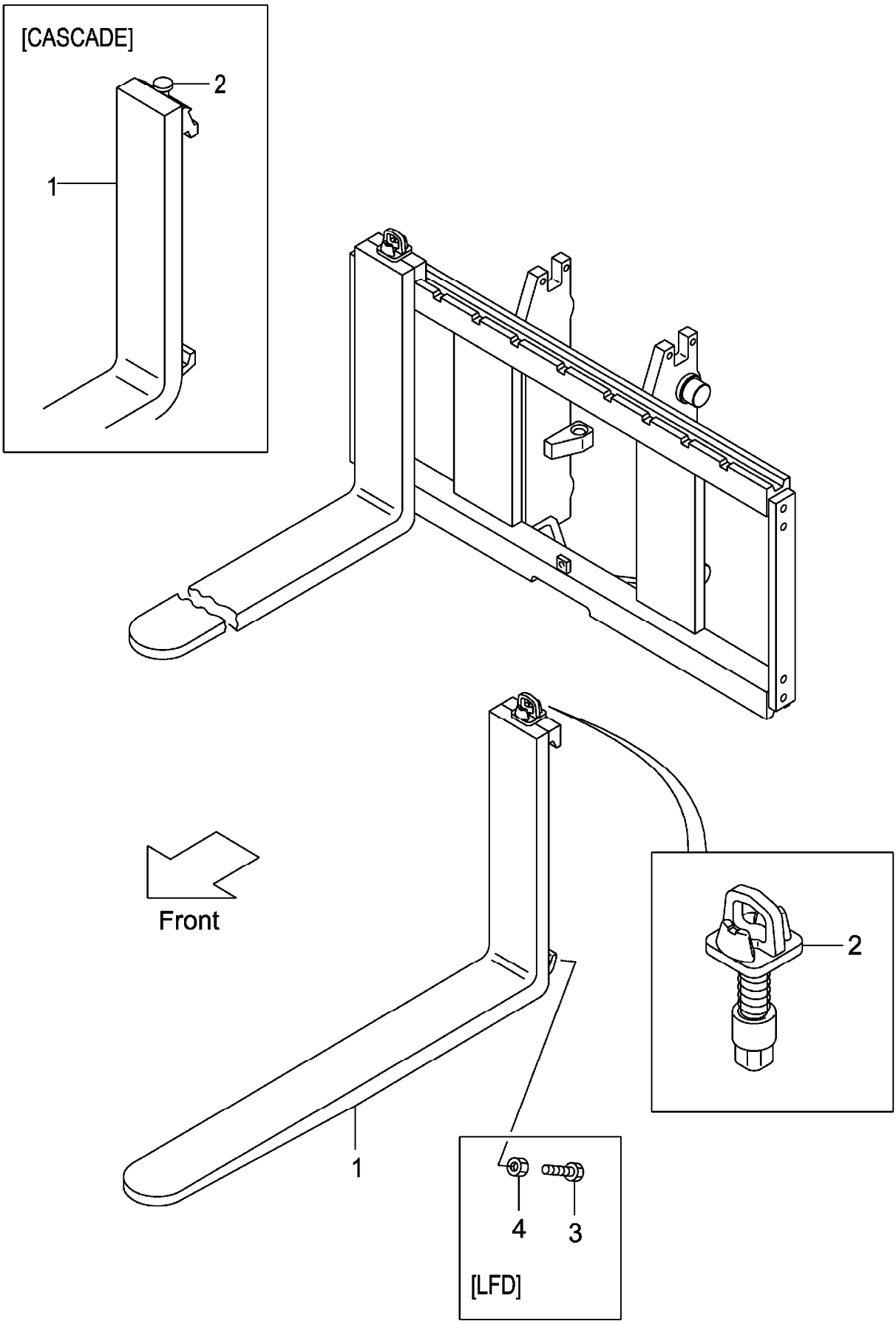

A:VFHM2N8(3T)

Item No	Part No.	Mark	Description		Req'd	Remarks : Serial No.
1	214J8-10501		FORK	ﾌｫｰｸ	2	(L=1070) INC.2
-	214J8-10581		FORK	ﾌｫｰｸ	2	[LF100] INC.2
-	214J8-10501		FORK	ﾌｫｰｸ	2	[LF107] INC.2
-	214J8-10591		FORK	ﾌｫｰｸ	2	[LF110] INC.2
-	214J8-10601		FORK	ﾌｫｰｸ	2	[LF120] INC.2
-	214J8-10511		FORK	ﾌｫｰｸ	2	[LF122] INC.2
-	214J8-10611		FORK	ﾌｫｰｸ	2	[LF130] INC.2
-	214J8-10521		FORK	ﾌｫｰｸ	2	[LF137] INC.2
-	214J8-10621		FORK	ﾌｫｰｸ	2	[LF140] INC.2
-	214J8-10631		FORK	ﾌｫｰｸ	2	[LF150] INC.2
-	214J8-10531		FORK	ﾌｫｰｸ	2	[LF152] INC.2
-	214J8-10641		FORK	ﾌｫｰｸ	2	[LF160] INC.2
-	214J8-10541		FORK	ﾌｫｰｸ	2	[LF167] INC.2
-	214J8-10651		FORK	ﾌｫｰｸ	2	[LF170] INC.2
-	214J8-10661		FORK	ﾌｫｰｸ	2	[LF180] INC.2
-	214J8-10551		FORK	ﾌｫｰｸ	2	[LF182] INC.2
-	214J8-10671		FORK	ﾌｫｰｸ	2	[LF190] INC.2
-	214J8-10561		FORK	ﾌｫｰｸ	2	[LF197] INC.2
-	214J8-10681		FORK	ﾌｫｰｸ	2	[LF200] INC.2
-	214J8-10571		FORK	ﾌｫｰｸ	2	[LF212] INC.2
-	234F8-10581		FORK	ﾌｫｰｸ	2	[LFD100] INC.2
-	234F8-10501		FORK	ﾌｫｰｸ	2	[LFD107] INC.2
-	234F8-10591		FORK	ﾌｫｰｸ	2	[LFD110] INC.2
-	234F8-10601		FORK	ﾌｫｰｸ	2	[LFD120] INC.2
-	234F8-10511		FORK	ﾌｫｰｸ	2	[LFD122] INC.2
-	234F8-10611		FORK	ﾌｫｰｸ	2	[LFD130] INC.2
-	234F8-10521		FORK	ﾌｫｰｸ	2	[LFD137] INC.2
-	234F8-10621		FORK	ﾌｫｰｸ	2	[LFD140] INC.2
-	234F8-10631		FORK	ﾌｫｰｸ	2	[LFD150] INC.2
-	234F8-10531		FORK	ﾌｫｰｸ	2	[LFD152] INC.2
-	234F8-10641		FORK	ﾌｫｰｸ	2	[LFD160] INC.2
-	234F8-10541		FORK	ﾌｫｰｸ	2	[LFD167] INC.2
-	234F8-10651		FORK	ﾌｫｰｸ	2	[LFD170] INC.2
-	234F8-10661		FORK	ﾌｫｰｸ	2	[LFD180] INC.2
-	234F8-10551		FORK	ﾌｫｰｸ	2	[LFD182] INC.2
-	234F8-10671		FORK	ﾌｫｰｸ	2	[LFD190] INC.2
-	234F8-10561		FORK	ﾌｫｰｸ	2	[LFD197] INC.2
-	234F8-10681		FORK	ﾌｫｰｸ	2	[LFD200] INC.2
-	234F8-10571		FORK	ﾌｫｰｸ	2	[LFD212] INC.2
-	22N98-10501		FORK	ﾌｫｰｸ	2	[LF107/CASCADE] INC.2
-	22N98-10511		FORK	ﾌｫｰｸ	2	[LF122/CASCADE] INC.2
2	214J8-11002		STOPPER,FORK	ｽﾄｯﾊﾟ	2	
-	W-K3PK-M		KIT,PIN,STOPPER	ｽﾄｯﾊﾟｷｯﾄ	2	[CASCADE]
3	234F8-12101		BOLT	ﾎﾞﾙﾄ	4	[LFD100-212]
4	01402-00010		NUT	ﾅｯﾄ	4	[LFD100-212]

FIG.219 LIFT BRACKET [VFHM2N8]

(M7020940) ﾘﾌﾄﾌﾞﾗｹｯﾄ

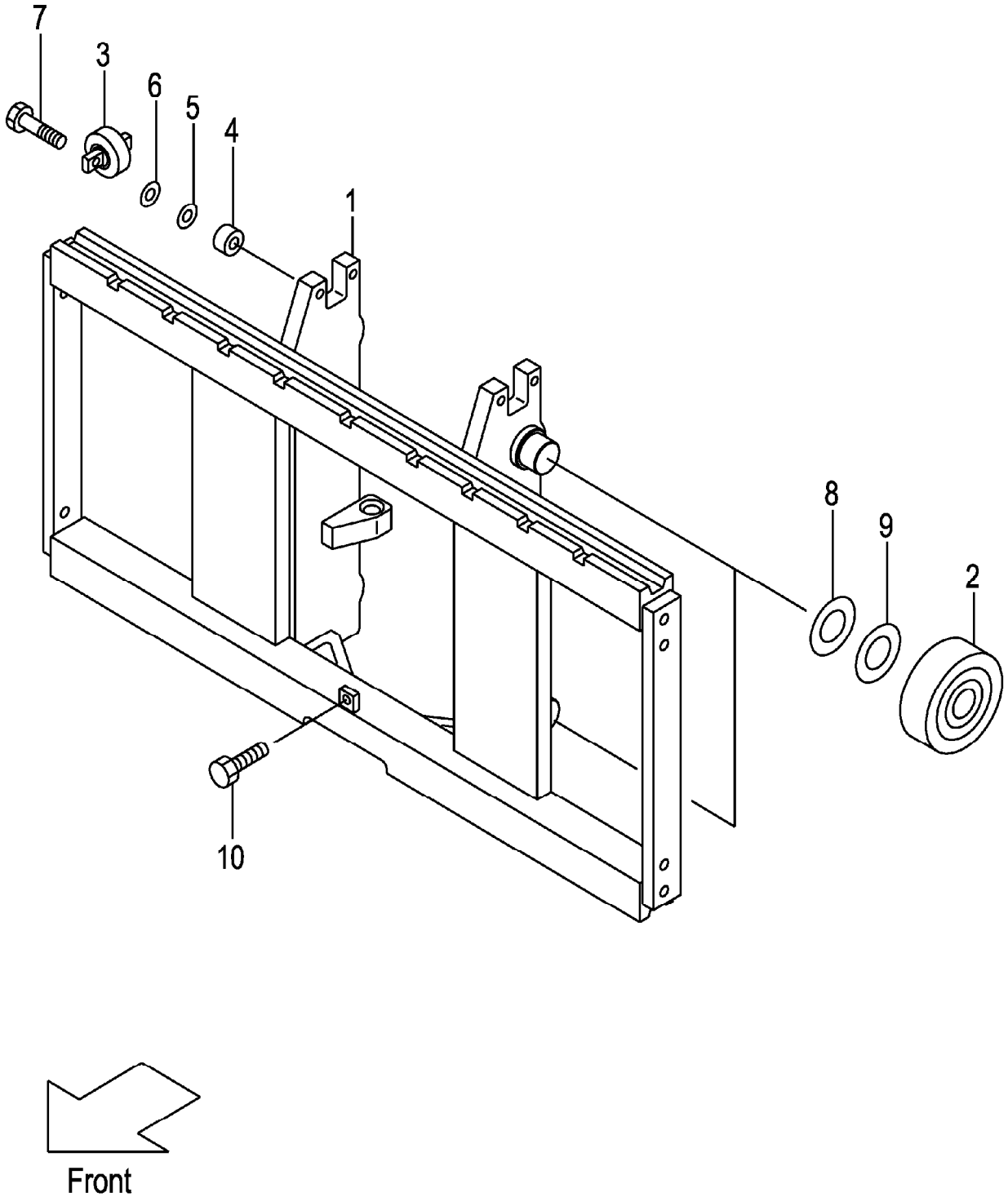

A:VFHM2N8(3T)

Item No	Part No.	Mark	Description		Req'd	Remarks : Serial No.
1	22N80-90201		BRACKET,LIFT	ﾌﾞﾗｹｯﾄ	1	
2	277P8-22051		ROLLER,END,119.0	ﾛｰﾗ	4	
-	277P8-22061		ROLLER,END,119.5	ﾛｰﾗ	(4)	
3	22N58-32701		ROLLER,SIDE	ﾛｰﾗ	2	
4	22N58-32711		SPACER	ｽﾍﾟｰｻ	4	
5	22018-30261		SHIM,T-0.5	ｼﾑ	4	
6	22018-30121		SHIM,T-1.0	ｼﾑ	4	
7	01103-10045		BOLT	ﾎﾞﾙﾄ	4	
8	277P8-22071		SHIM,T-0.5	ｼﾑ	5	
9	277P8-22081		SHIM,T-1.0	ｼﾑ	5	
10	01184-12025		BOLT & WASHER	ﾎﾞﾙﾄ & ﾜｯｼｬ	1	

FIG.220 BACKREST [VFHM2N8]

(M70282A0) ﾊﾞｯｸﾚｽﾄ

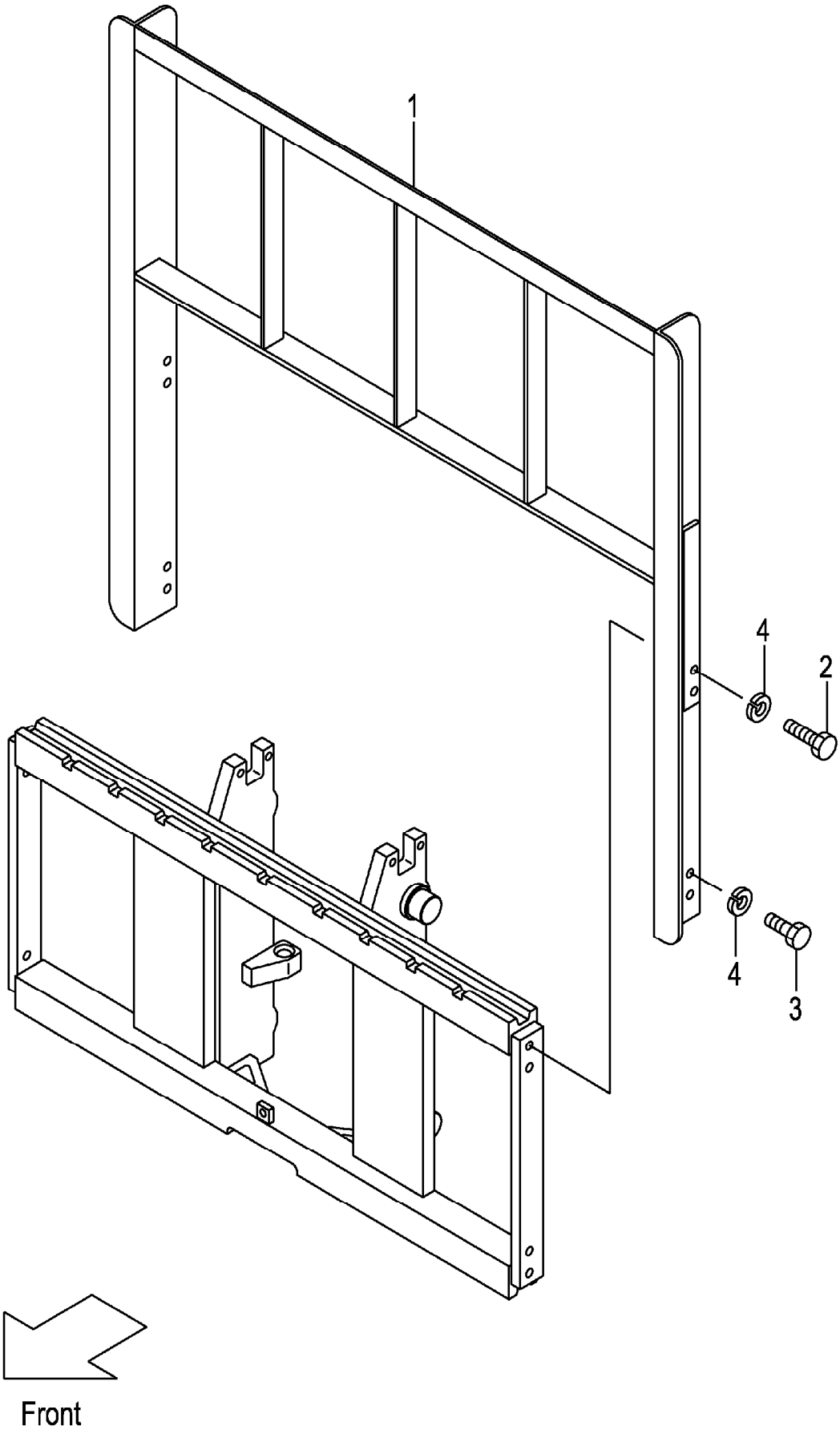

A:VFHM2N8(3T)

Item No	Part No.	Mark	Description		Req'd	Remarks : Serial No.
1	234F8-22201		BACKREST	ﾊﾞｯｸﾚｽﾄ	1	
2	01100-14030		BOLT	ﾎﾞﾙﾄ	4	
3	01100-14025		BOLT	ﾎﾞﾙﾄ	4	
4	02010-00014		WASHER	ﾜｯｼｬ	8	

FIG.221 MAST [VFHM2N8]

(M7020760) マスト

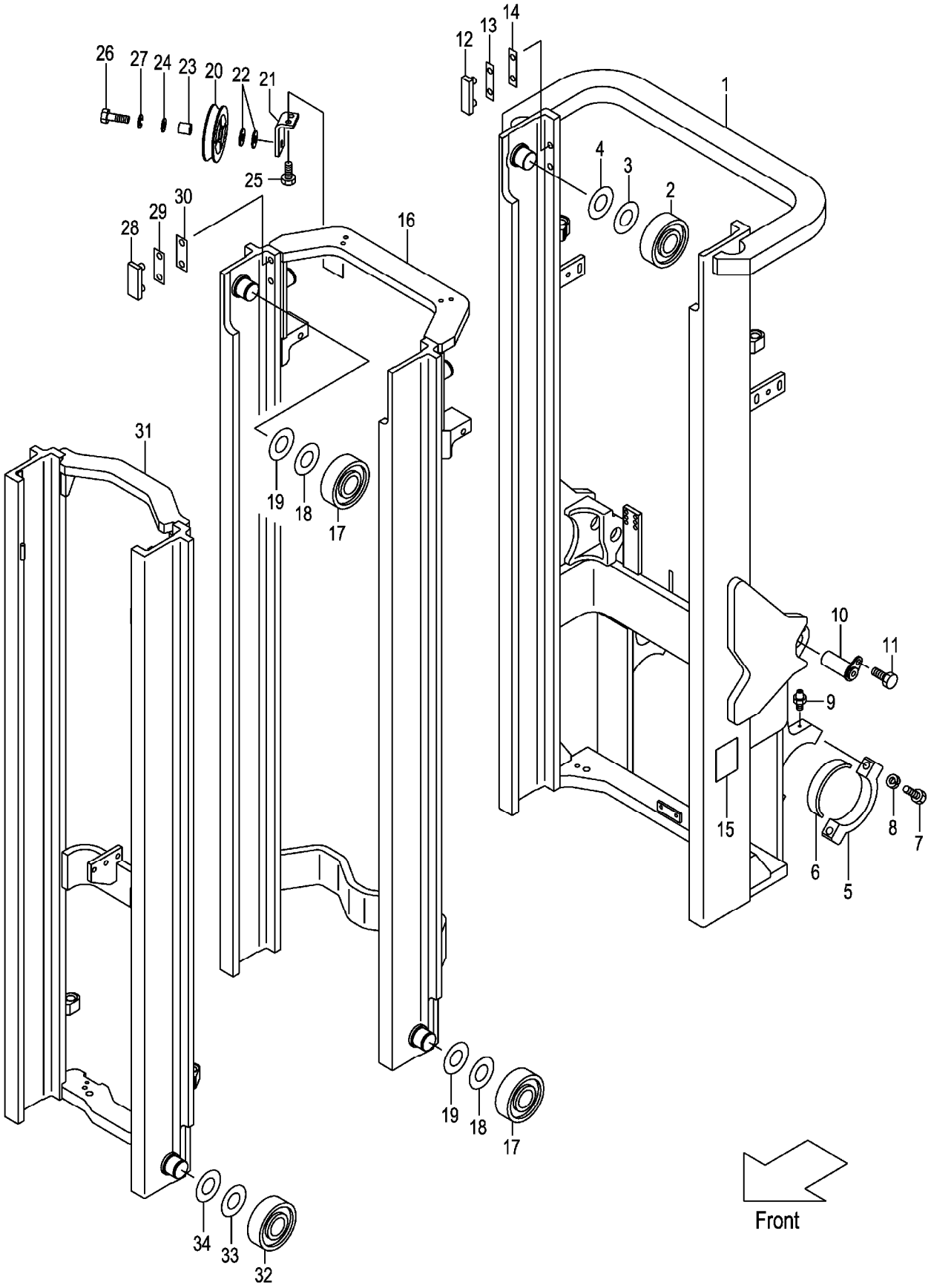

A:VFHM2N8(3T)

Item No	Part No.	Mark	Description		Req'd	Remarks : Serial No.
1	22N80-70201		MAST,OUTER VFHM435	ｱｳﾀﾏｽﾄ	1	
-	22N80-70231		MAST,OUTER VFHM480	ｱｳﾀﾏｽﾄ	1	
-	22N80-70241		MAST,OUTER VFHM500	ｱｳﾀﾏｽﾄ	1	
-	22N80-70251		MAST,OUTER VFHM540	ｱｳﾀﾏｽﾄ	1	
-	22N80-70261		MAST,OUTER VFHM550	ｱｳﾀﾏｽﾄ	1	
-	52N93-91901		MAST,OUTER VFHM435	ｱｳﾀﾏｽﾄ	1	[EXR][RW][HC]
-	52N93-91931		MAST,OUTER VFHM480	ｱｳﾀﾏｽﾄ	1	[EXR][RW][HC]
-	52N93-91941		MAST,OUTER VFHM500	ｱｳﾀﾏｽﾄ	1	[EXR][RW][HC]
-	52N93-91951		MAST,OUTER VFHM540	ｱｳﾀﾏｽﾄ	1	[EXR][RW][HC]
-	52N93-91961		MAST,OUTER VFHM550	ｱｳﾀﾏｽﾄ	1	[EXR][RW][HC]
2	277P8-22051		ROLLER,END,119.0	ﾛｰﾗ	2	
3	277P8-22071		SHIM,T-0.5	ｼﾑ	12	
4	277P8-22081		SHIM,T-1.0	ｼﾑ	12	
5	277P8-32701		CAP,MAST-SUPPORT	ｷｬｯﾌﾟ	2	
6	214A8-02201		BUSHING	ﾌﾞｯｼﾝｸﾞ	2	
7	01103-16065		BOLT	ﾎﾞﾙﾄ	4	
8	02011-00016		WASHER	ﾜｯｼｬ	4	
9	04901-00100		FITTING	ﾌｨｯﾃｨﾝｸﾞ	2	
10	272K8-52201		PIN	ﾋﾟﾝ	2	
11	216G8-52301		BOLT & WASHER	ﾎﾞﾙﾄ & ﾜｯｼｬ	2	
12	216G8-33401		SLIPPER	ｽﾘｯﾊﾟ	2	
13	216G8-33361		SHIM,T-0.5	ｼﾑ	8	
14	216G8-33371		SHIM,T-1.0	ｼﾑ	4	
15	23678-06002		PLATE,NAME	ﾌﾟﾚｰﾄ	1	
16	22N80-70401		MAST,MIDDLE VFHM435	ﾐﾄﾞﾙﾏｽﾄ	1	
-	22N80-70431		MAST,MIDDLE VFHM480	ﾐﾄﾞﾙﾏｽﾄ	1	
-	22N80-70441		MAST,MIDDLE VFHM500	ﾐﾄﾞﾙﾏｽﾄ	1	
-	22N80-70451		MAST,MIDDLE VFHM540	ﾐﾄﾞﾙﾏｽﾄ	1	
-	22N80-70461		MAST,MIDDLE VFHM550	ﾐﾄﾞﾙﾏｽﾄ	1	
17	277P8-22051		ROLLER,END,119.0	ﾛｰﾗ	4	
-	277P8-22061		ROLLER,END,119.5	ﾛｰﾗ	(2)	
18	277P8-22071		SHIM,T-0.5	ｼﾑ	15	
19	277P8-22081		SHIM,T-1.0	ｼﾑ	15	
20	63130-15301		PULLEY	ﾌﾟｰﾘ	1	
21	22N40-72191		BRACKET	ﾌﾞﾗｹｯﾄ	1	
22	62050-12331		SPACER	ｽﾍﾟｰｻ	2	
23	214A0-72701		COLLAR	ｶﾗｰ	1	
24	02000-00016		WASHER	ﾜｯｼｬ	1	
25	01184-10025		BOLT	ﾎﾞﾙﾄ	2	
26	01100-16050		BOLT	ﾎﾞﾙﾄ	1	
27	02010-00016		WASHER	ﾜｯｼｬ	1	
28	216G8-33351		SLIPPER	ｽﾘｯﾊﾟ	2	
29	216G8-33361		SHIM,T-0.5	ｼﾑ	4	
30	216G8-33371		SHIM,T-1.0	ｼﾑ	8	
31	22N80-70601		MAST,INNER VFHM435	ｲﾝﾅﾏｽﾄ	1	
-	22N80-70631		MAST,INNER VFHM480	ｲﾝﾅﾏｽﾄ	1	
-	22N80-70641		MAST,INNER VFHM500	ｲﾝﾅﾏｽﾄ	1	
-	22N80-70651		MAST,INNER VFHM540	ｲﾝﾅﾏｽﾄ	1	
-	22N80-70661		MAST,INNER VFHM550	ｲﾝﾅﾏｽﾄ	1	
32	277P8-22051		ROLLER,END,119.0	ﾛｰﾗ	2	

FIG.221 MAST [VFHM2N8]

(M7020760) マスト

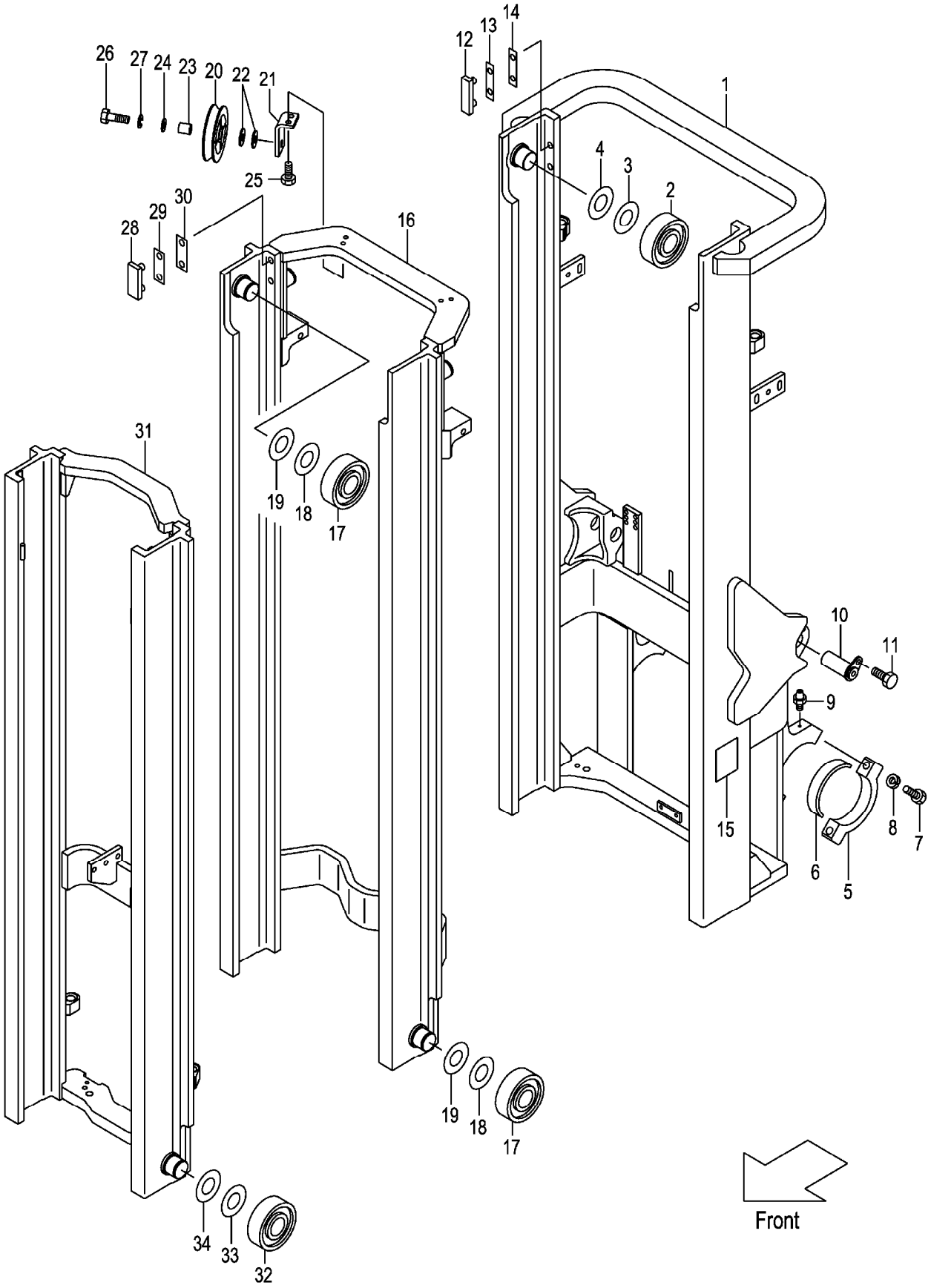

A:VFHM2N8(3T)

Item No	Part No.	Mark	Description	Req'd	Remarks : Serial No.
-	277P8-22061		ROLLER,END,119.5 ローラ	(2)	
33	277P8-22071		SHIM,T-0.5 シム	12	
34	277P8-22081		SHIM,T-1.0 シム	12	

M E M O

M E M O

FIG.222 LIFT CYLINDER (FRONT) [VFHM2N8]

(M70208A0) リフトシリンダ(フロント)

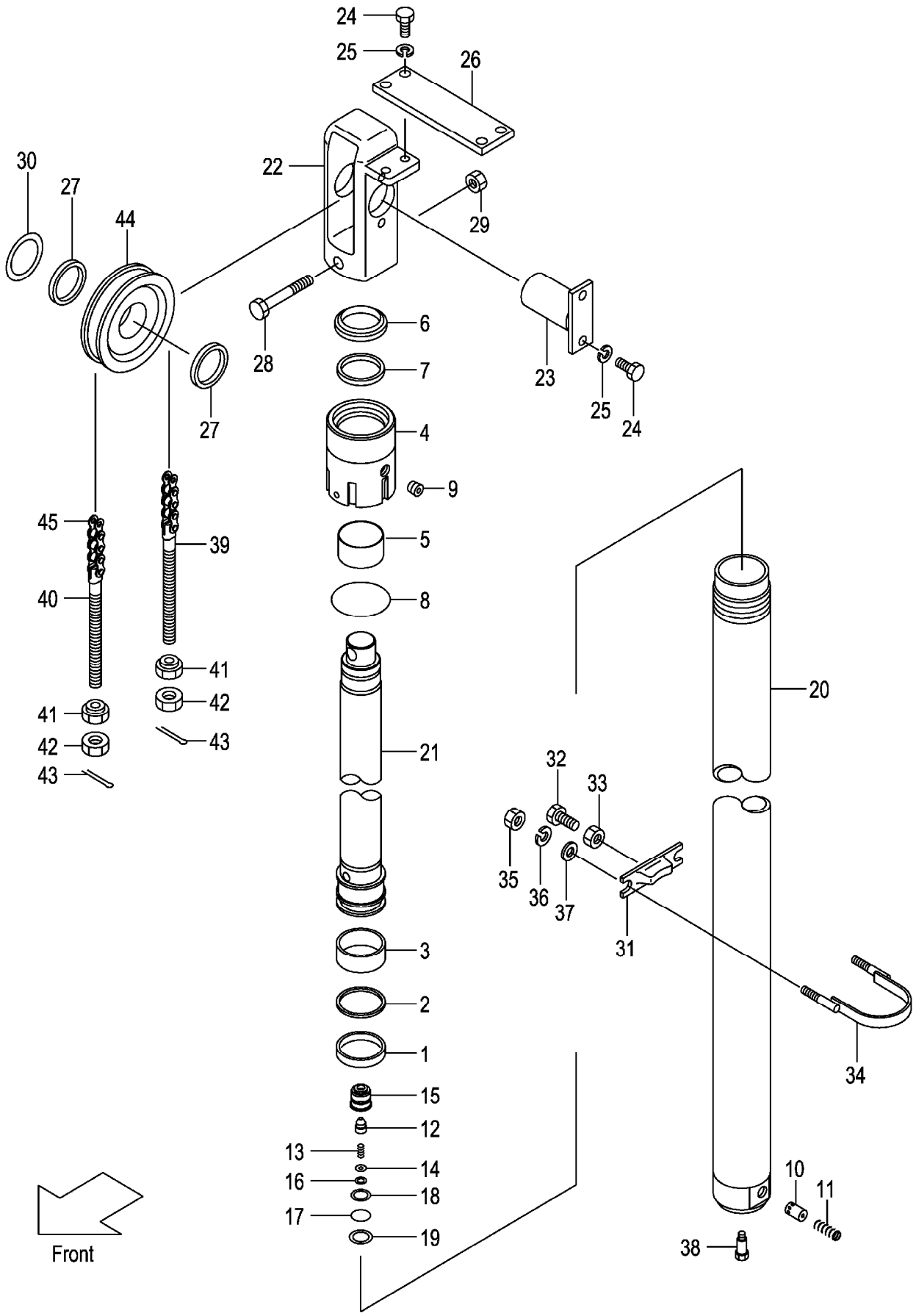

A:VFHM2N8(3T)

Item No	Part No.	Mark	Description		Req'd	Remarks : Serial No.
A1	22N80-50201		CYL-ASSY,LIFT VFHM435	ﾘﾌﾄｼﾘﾝﾀﾞｱｯｾﾝ	2	INC.1-21
-	22N80-50221		CYL-ASSY,LIFT VFHM480	ﾘﾌﾄｼﾘﾝﾀﾞｱｯｾﾝ	2	INC.1-21
-	22N80-50231		CYL-ASSY,LIFT VFHM500	ﾘﾌﾄｼﾘﾝﾀﾞｱｯｾﾝ	2	INC.1-21
-	22N80-50261		CYL-ASSY,LIFT VFHM540	ﾘﾌﾄｼﾘﾝﾀﾞｱｯｾﾝ	2	INC.1-21
-	22N80-80261		CYL-ASSY,LIFT VFHM550	ﾘﾌﾄｼﾘﾝﾀﾞｱｯｾﾝ	2	INC.1-21
1	23460-53161		PACKING	ﾊﾟｯｷﾝｸﾞ	2	
2	22658-52301		RING,BACK-UP	ﾘﾝｸﾞ	2	
3	23460-53181		WEARING	ｳｪｱﾘﾝｸﾞ	2	
4	214T8-43011		CAP	ｷｬｯﾌﾟ	2	
5	24629-44201		BUSHING	ﾌﾞｯｼﾝｸﾞ	2	
6	224T8-46001		SEAL,DUST	ｼｰﾙ	2	
7	224T8-46011		PACKING	ﾊﾟｯｷﾝｸﾞ	2	
8	03340-00090		O-RING	Oﾘﾝｸﾞ	2	
9	24329-45541		PLUG	ﾌﾟﾗｸﾞ	4	
10	24320-55001		PISTON	ﾋﾟｽﾄﾝ	2	
11	27978-42601		SPRING	ｽﾌﾟﾘﾝｸﾞ	2	
A2	214T0-83501		VALVE-ASSY,CHECK	ﾁｪｯｸﾊﾞﾙﾌﾞｱｯｾﾝ	2	INC.12-16
12	214T0-83521		POPPET	ﾎﾟﾍﾟｯﾄ	2	
13	214T0-83541		SPRING	ｽﾌﾟﾘﾝｸﾞ	2	
14	214T0-83531		PLATE	ﾌﾟﾚｰﾄ	2	
15	214T0-83511		CASE	ｹｰｽ	2	
16	02110-00014		RING,SNAP	ｽﾅｯﾌﾟﾘﾝｸﾞ	2	
17	03320-00210		O-RING	Oﾘﾝｸﾞ	2	
18	03360-00210		RING,BACK-UP	ﾘﾝｸﾞ	2	
19	02110-00028		RING,SNAP	ｽﾅｯﾌﾟﾘﾝｸﾞ	2	
20	22N80-50601		BODY,CYL VFHM435	ﾎﾞﾃﾞｨ	2	
-	22N80-50621		BODY,CYL VFHM480	ﾎﾞﾃﾞｨ	2	
-	22N80-50631		BODY,CYL VFHM500	ﾎﾞﾃﾞｨ	2	
-	22N80-50661		BODY,CYL VFHM540	ﾎﾞﾃﾞｨ	2	
-	22N80-80661		BODY,CYL VFHM550	ﾎﾞﾃﾞｨ	2	
21	22N80-50401		ROD,PISTON VFHM435	ﾛｯﾄﾞ	2	
-	22N80-50421		ROD,PISTON VFHM480	ﾛｯﾄﾞ	2	
-	22N80-50431		ROD,PISTON VFHM500	ﾛｯﾄﾞ	2	
-	22N80-50461		ROD,PISTON VFHM540	ﾛｯﾄﾞ	2	
-	22N80-80461		ROD,PISTON VFHM550	ﾛｯﾄﾞ	2	
22	22N80-52601		HEAD,PISTON	ﾍｯﾄﾞ	2	
23	22N40-74501		PIN	ﾋﾟﾝ	2	
24	01103-10020		BOLT	ﾎﾞﾙﾄ	8	
25	02011-00010		WASHER	ﾜｯｼｬ	8	
26	22N40-74311		PLATE	ﾌﾟﾚｰﾄ	1	
27	229G0-52251		SPACER	ｽﾍﾟｰｻ	4	
28	01100-12080		BOLT	ﾎﾞﾙﾄ	2	
29	01402-00012		NUT	ﾅｯﾄ	2	
30	224T8-52291		SHIM	ｼﾑ	1	
31	224T8-42711		SUPPORT,CYL	ｻﾎﾟｰﾄ	2	
32	01120-16040		BOLT	ﾎﾞﾙﾄ	2	
33	01402-00016		NUT	ﾅｯﾄ	2	
34	224T8-42701		U-BOLT	Uﾎﾞﾙﾄ	2	
35	01400-00010		NUT	ﾅｯﾄ	4	
36	02010-00010		WASHER	ﾜｯｼｬ	4	

FIG.222 LIFT CYLINDER (FRONT) [VFHM2N8]

(M70208A0) リフトシリンダ(フロント)

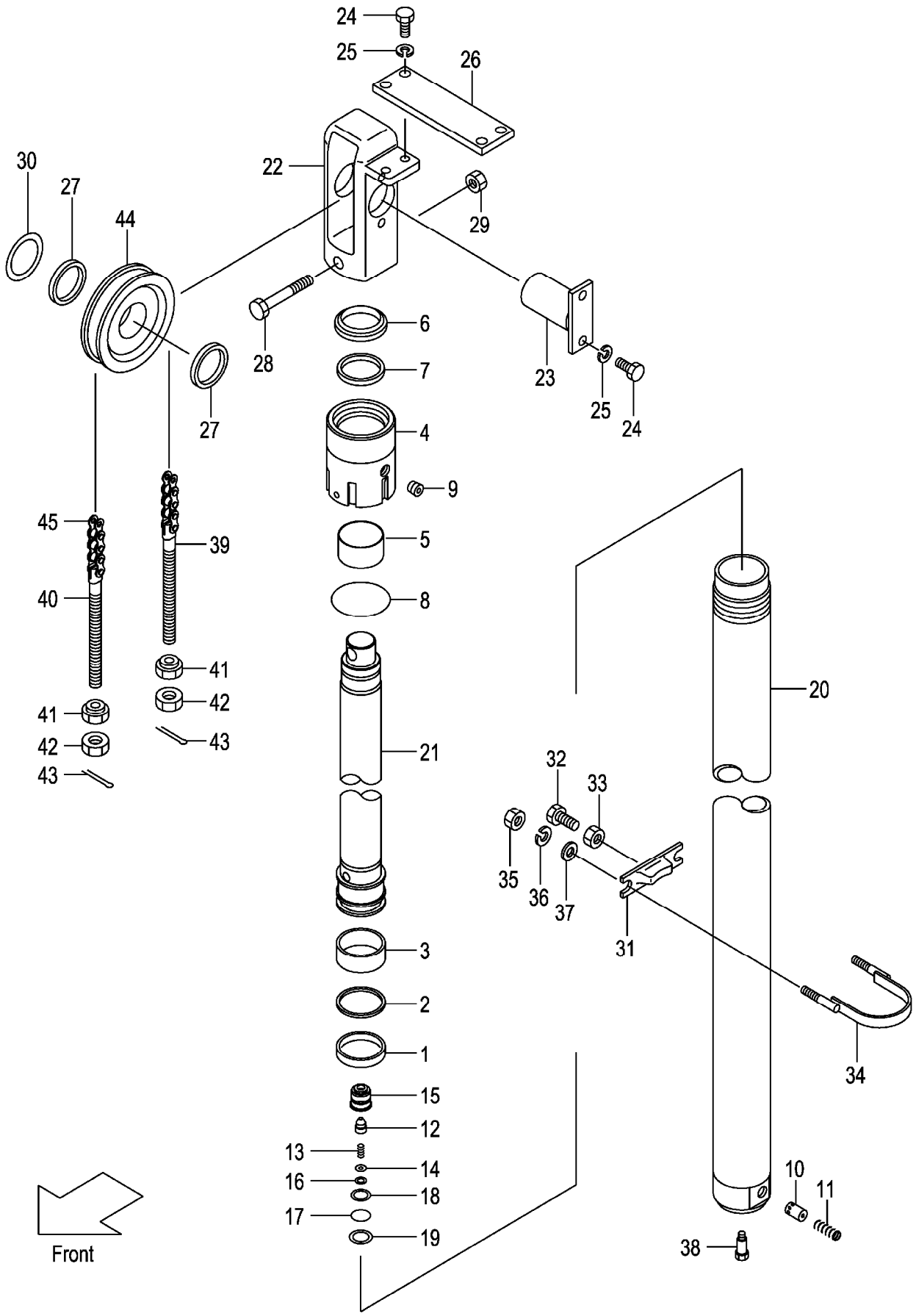

A:VFHM2N8(3T)

Item No	Part No.	Mark	Description		Req'd	Remarks : Serial No.
37	02000-00010		WASHER	ﾜｯｼｬ	4	
38	214A8-42661		BOLT	ﾎﾞﾙﾄ	2	
39	24459-42391		PIN,ANCHOR	ﾋﾟﾝ	2	
40	24459-42381		PIN,ANCHOR	ﾋﾟﾝ	2	
41	22218-40191		NUT	ﾅｯﾄ	4	
42	01400-00018		NUT	ﾅｯﾄ	4	
43	02200-03030		PIN	ﾋﾟﾝ	4	
44	277P0-83001		SHEAVE	ｼｰﾌﾞ	2	
45	22438-45571		CHAIN VFHM435	ﾁｪｰﾝ	2	
-	22438-45631		CHAIN VFHM480	ﾁｪｰﾝ	2	
-	22438-45671		CHAIN VFHM500	ﾁｪｰﾝ	2	
-	22438-45731		CHAIN VFHM540	ﾁｪｰﾝ	2	
-	22438-45731		CHAIN VFHM550	ﾁｪｰﾝ	2	

M E M O

M E M O

FIG.223 LIFT CYLINDER (REAR) [VFHM2N8]

(M70208B0) リフトシリンダ(リヤー)

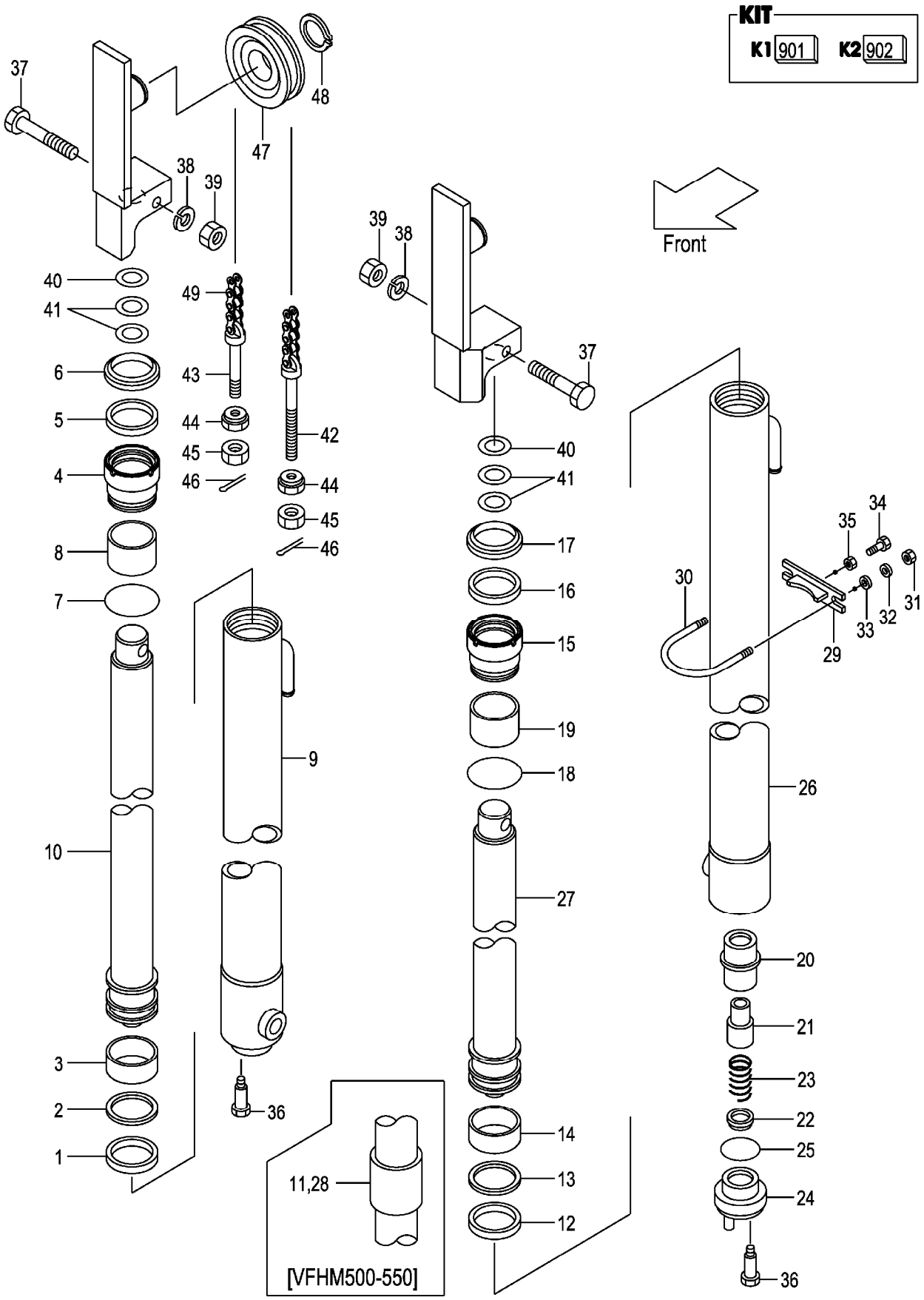

A:VFHM2N8(3T)

Item No	Part No.	Mark	Description		Req'd	Remarks : Serial No.
A1	277T0-81602		CYL-ASSY,LIFT,RH VFHM435		1	INC.1-10
				ﾘﾌﾄｼﾘﾝﾀﾞｱｯｾﾝ		
-	277T0-81632		CYL-ASSY,LIFT,RH VFHM480		1	INC.1-10
				ﾘﾌﾄｼﾘﾝﾀﾞｱｯｾﾝ		
-	277T0-81642		CYL-ASSY,LIFT,RH VFHM500		1	INC.1-11
				ﾘﾌﾄｼﾘﾝﾀﾞｱｯｾﾝ		
-	277T0-81652		CYL-ASSY,LIFT,RH VFHM540		1	INC.1-11
				ﾘﾌﾄｼﾘﾝﾀﾞｱｯｾﾝ		
-	277T0-81662		CYL-ASSY,LIFT,RH VFHM550		1	INC.1-11
				ﾘﾌﾄｼﾘﾝﾀﾞｱｯｾﾝ		
901	232L8-49801	K1	KIT,OVERHAUL RH	ｵｰﾊﾞﾎｰﾙｷｯﾄ	1	INC.1-3,5-7
1	27978-42411	*	PACKING	ﾊﾟｯｷﾝｸﾞ	1	
2	24459-42291	*	RING,BACK-UP	ﾘﾝｸﾞ	1	
3	27978-42421	*	WEARING	ｳｪｱﾘﾝｸﾞ	1	
4	232L8-42601		CAP,CYL	ｷｬｯﾌﾟ	1	
5	214J8-42721	*	PACKING	ﾊﾟｯｷﾝｸﾞ	1	
6	214J8-46001	*	SEAL,DUST	ｼｰﾙ	1	
7	232L8-42631	*	O-RING	Oﾘﾝｸﾞ	1	
8	232L8-42621		BUSHING	ﾌﾞｯｼﾝｸﾞ	1	
9	277T0-81002		BODY,CYL,RH VFHM435	ﾎﾞﾃﾞｨ	1	
-	277T0-81032		BODY,CYL,RH VFHM480	ﾎﾞﾃﾞｨ	1	
-	277T0-81042		BODY,CYL,RH VFHM500	ﾎﾞﾃﾞｨ	1	
-	277T0-81052		BODY,CYL,RH VFHM540	ﾎﾞﾃﾞｨ	1	
-	277T0-81062		BODY,CYL,RH VFHM550	ﾎﾞﾃﾞｨ	1	
10	277T0-81401		ROD,PISTON VFHM435	ﾛｯﾄﾞ	1	
-	277T0-81431		ROD,PISTON VFHM480	ﾛｯﾄﾞ	1	
-	277T0-81441		ROD,PISTON VFHM500	ﾛｯﾄﾞ	1	
-	277T0-81451		ROD,PISTON VFHM540	ﾛｯﾄﾞ	1	
-	277T0-81461		ROD,PISTON VFHM550	ﾛｯﾄﾞ	1	
11	27978-42371		SPACER VFHM500	ｽﾍﾟｰｻ	1	
-	27980-82701		SPACER VFHM540	ｽﾍﾟｰｻ	1	
-	27978-42371		SPACER VFHM550	ｽﾍﾟｰｻ	1	
A2	277T0-81802		CYL-ASSY,LIFT,LH VFHM435		1	INC.12-27
				ﾘﾌﾄｼﾘﾝﾀﾞｱｯｾﾝ		
-	277T0-81832		CYL-ASSY,LIFT,LH VFHM480		1	INC.12-27
				ﾘﾌﾄｼﾘﾝﾀﾞｱｯｾﾝ		
-	277T0-81842		CYL-ASSY,LIFT,LH VFHM500		1	INC.12-28
				ﾘﾌﾄｼﾘﾝﾀﾞｱｯｾﾝ		
-	277T0-81852		CYL-ASSY,LIFT,LH VFHM540		1	INC.12-28
				ﾘﾌﾄｼﾘﾝﾀﾞｱｯｾﾝ		
-	277T0-81862		CYL-ASSY,LIFT,LH VFHM550		1	INC.12-28
				ﾘﾌﾄｼﾘﾝﾀﾞｱｯｾﾝ		
902	232L8-49801	K2	KIT,OVERHAUL LH	ｵｰﾊﾞﾎｰﾙｷｯﾄ	1	INC.12-14,16-18
12	27978-42411	*	PACKING	ﾊﾟｯｷﾝｸﾞ	1	
13	24459-42291	*	RING,BACK-UP	ﾘﾝｸﾞ	1	
14	27978-42421	*	WEARING	ｳｪｱﾘﾝｸﾞ	1	
15	232L8-42601		CAP,CYL	ｷｬｯﾌﾟ	1	
16	214J8-42721	*	PACKING	ﾊﾟｯｷﾝｸﾞ	1	
17	214J8-46001	*	SEAL,DUST	ｼｰﾙ	1	
18	232L8-42631	*	O-RING	Oﾘﾝｸﾞ	1	

FIG.223 LIFT CYLINDER (REAR) [VFHM2N8]

(M70208B0) リフトシリンダ(リヤー)

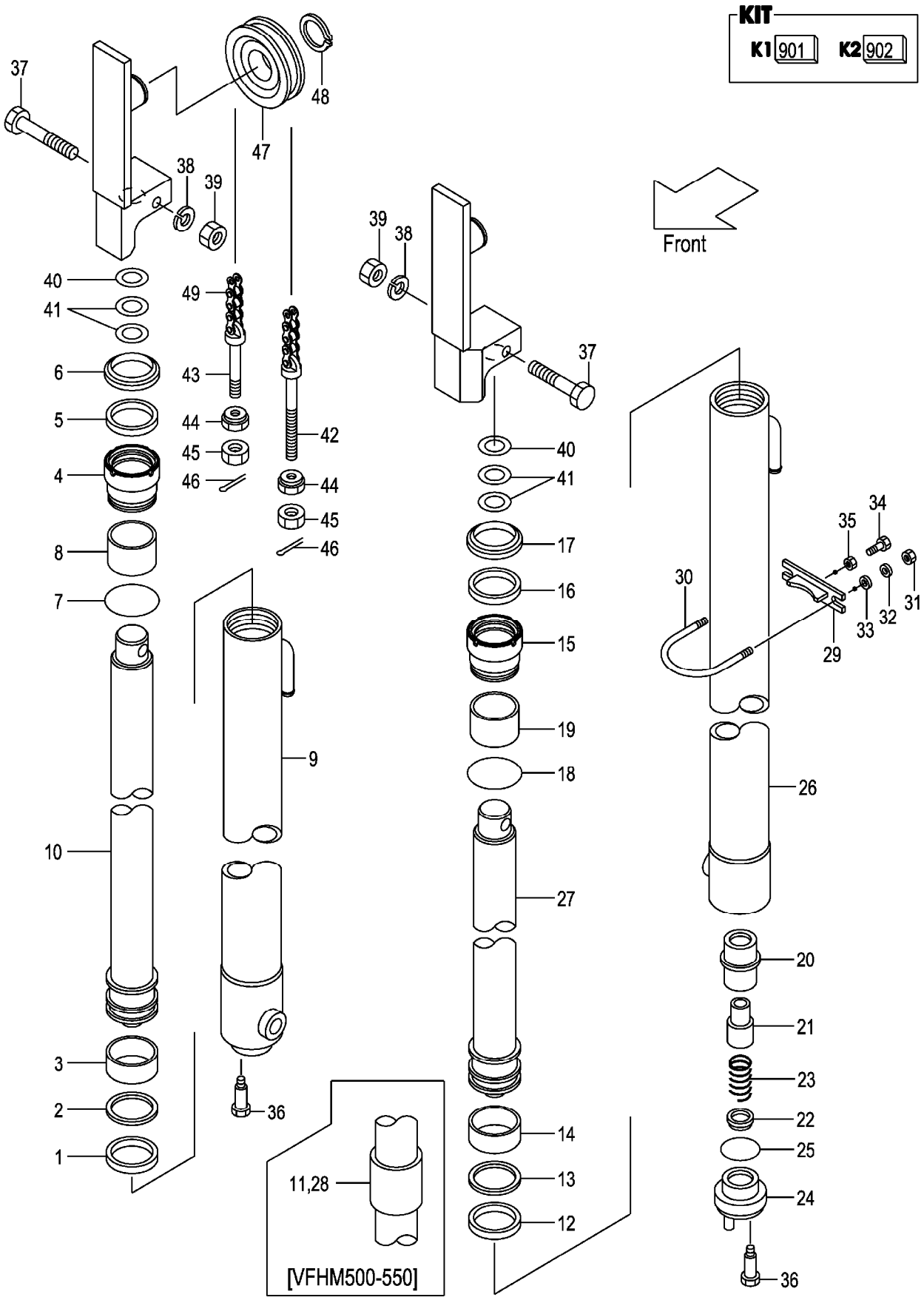

A:VFHM2N8(3T)

Item No	Part No.	Mark	Description		Req'd	Remarks : Serial No.
19	232L8-42621		BUSHING	ﾌﾞｯｼﾝｸﾞ	1	
20	53658-43021		SLEEVE	ｽﾘｰﾌﾞ	1	
21	53658-43011		PISTON	ﾋﾟｽﾄﾝ	1	
22	53658-43001		VALVE,CHECK	ﾊﾞﾙﾌﾞ	1	
23	53658-43031		SPRING	ｽﾌﾟﾘﾝｸﾞ	1	
24	53658-43041		PLUG	ﾌﾟﾗｸﾞ	1	
25	03320-00340		O-RING	Oﾘﾝｸﾞ	1	
26	277T0-81202		BODY,CYL,LH VFHM435	ﾎﾞﾃﾞｨ	1	
-	277T0-81232		BODY,CYL,LH VFHM480	ﾎﾞﾃﾞｨ	1	
-	277T0-81242		BODY,CYL,LH VFHM500	ﾎﾞﾃﾞｨ	1	
-	277T0-81252		BODY,CYL,LH VFHM540	ﾎﾞﾃﾞｨ	1	
-	277T0-81262		BODY,CYL,LH VFHM550	ﾎﾞﾃﾞｨ	1	
27	277T0-81401		ROD,PISTON VFHM435	ﾛｯﾄﾞ	1	
-	277T0-81431		ROD,PISTON VFHM480	ﾛｯﾄﾞ	1	
-	277T0-81441		ROD,PISTON VFHM500	ﾛｯﾄﾞ	1	
-	277T0-81451		ROD,PISTON VFHM540	ﾛｯﾄﾞ	1	
-	277T0-81461		ROD,PISTON VFHM550	ﾛｯﾄﾞ	1	
28	27978-42371		SPACER VFHM500	ｽﾍﾟｰｻ	1	
-	27980-82701		SPACER VFHM540	ｽﾍﾟｰｻ	1	
-	27978-42371		SPACER VFHM550	ｽﾍﾟｰｻ	1	
29	22N58-43011		SUPPORT,CYL	ｻﾎﾟｰﾄ	2	
30	234A8-42551		U-BOLT	Uﾎﾞﾙﾄ	2	
31	01400-00010		NUT	ﾅｯﾄ	4	
32	02010-20010		WASHER	ﾜｯｼｬ	4	
33	02000-20010		WASHER	ﾜｯｼｬ	4	
34	01120-12040		BOLT	ﾎﾞﾙﾄ	2	
35	01402-00012		NUT	ﾅｯﾄ	2	
36	214A8-42661		BOLT	ﾎﾞﾙﾄ	2	
37	01100-12070		BOLT	ﾎﾞﾙﾄ	2	
38	02010-00012		WASHER	ﾜｯｼｬ	2	
39	01400-00012		NUT	ﾅｯﾄ	2	
40	23917-42191		SHIM,T-1.0	ｼﾑ	10	
41	22679-43831		SHIM,T-0.2	ｼﾑ	10	
42	24459-42391		PIN,ANCHOR	ﾋﾟﾝ	2	
43	215K0-82701		PIN,ANCHOR	ﾋﾟﾝ	2	
44	22218-40191		NUT	ﾅｯﾄ	4	
45	01400-00018		NUT	ﾅｯﾄ	4	
46	02200-03030		PIN,COTTER	ﾋﾟﾝ	4	
47	234A8-43501		SHEAVE	ｼｰﾌﾞ	2	
48	02100-00040		RING,SNAP	ｽﾅｯﾌﾟﾘﾝｸﾞ	2	
49	22438-45771		CHAIN,LEAF VFHM435	ﾁｪｰﾝ	2	
-	22438-45831		CHAIN,LEAF VFHM480	ﾁｪｰﾝ	2	
-	22438-45871		CHAIN,LEAF VFHM500	ﾁｪｰﾝ	2	
-	22438-45931		CHAIN,LEAF VFHM540	ﾁｪｰﾝ	2	
-	22438-45931		CHAIN,LEAF VFHM550	ﾁｪｰﾝ	2	

M E M O

M E M O

FIG.224 MAST PIPING [VFHM2N8]

(M70208C0) マストパイピング

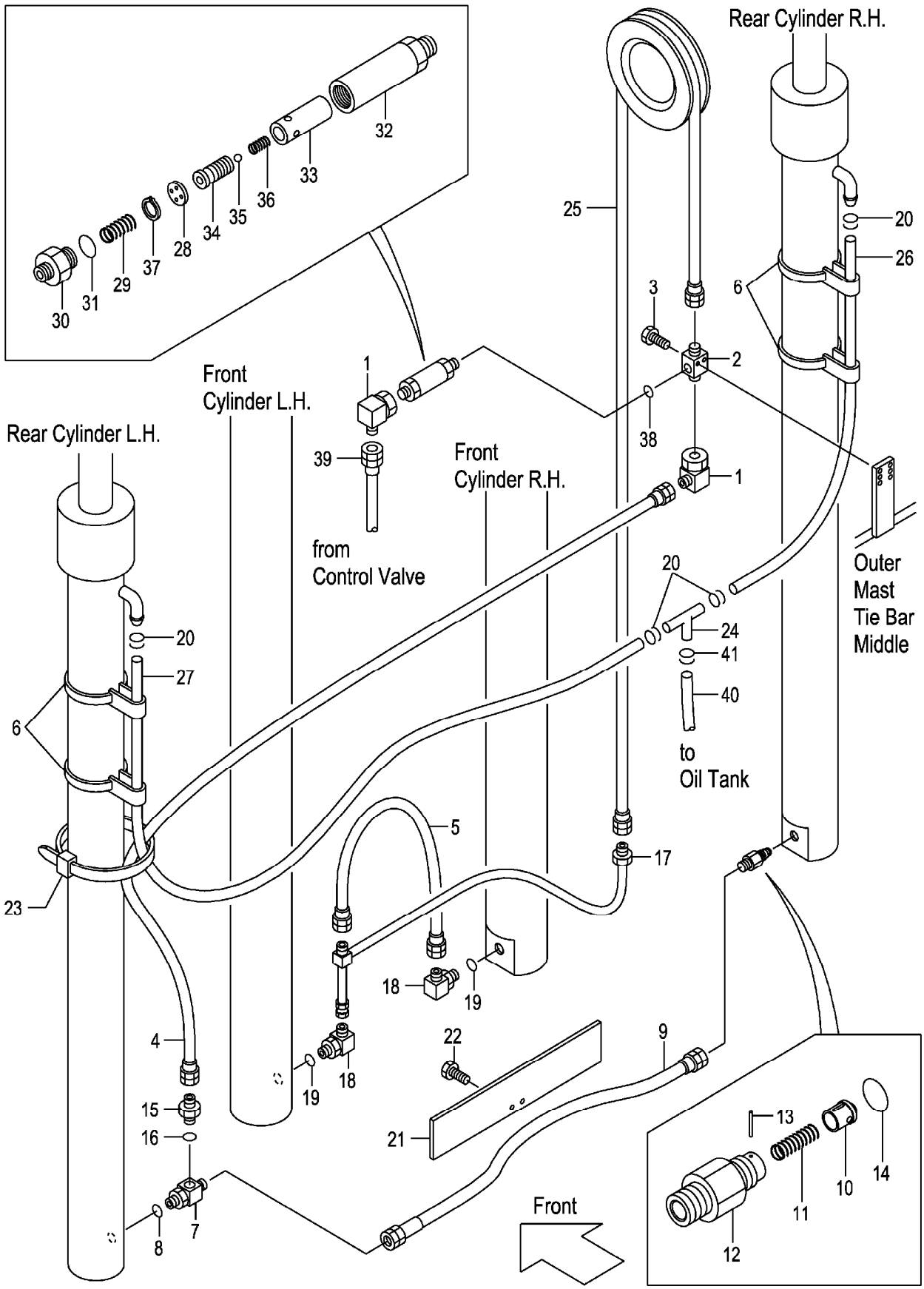

A:VFHM2N8(3T)

Item No	Part No.	Mark	Description		Req'd	Remarks : Serial No.
1	62150-14321		ELBOW	ｴﾙﾎﾞ	2	
2	229F0-94101		THREE-WAY	ｽﾘｰｳｪｲ	1	
3	01184-10040		BOLT	ﾎﾞﾙﾄ	2	
4	22N40-82221		HOSE	ﾎｰｽ	1	
5	22N40-82201		HOSE	ﾎｰｽ	1	
6	22N58-45001		BAND	ﾊﾞﾝﾄﾞ	2	
A1	216G0-93101		THREE-WAY-ASSY	ｽﾘｰｳｪｲｱｯｾﾝ	1	INC.7,8
7	NO PART NO.	#	THREE-WAY	ｽﾘｰｳｪｲ	1	
8	03320-00140		O-RING	Oﾘﾝｸﾞ	1	
9	22N50-92101		HOSE	ﾎｰｽ	1	
A2	234A8-40701		VALVE-ASSY,CUT	ｶｯﾄﾊﾞﾙﾌﾞｱｯｾﾝ	1	INC.10-14
10	234A8-42602		PISTON	ﾋﾟｽﾄﾝ	1	
11	234A8-42611		SPRING	ｽﾌﾟﾘﾝｸﾞ	1	
12	234A8-42622		NIPPLE	ﾆｯﾌﾟﾙ	1	
13	02270-01014		PIN	ﾋﾟﾝ	1	
14	03320-00140		O-RING	Oﾘﾝｸﾞ	1	
A3	04134-20404		NIPPLE-ASSY	ﾆｯﾌﾟﾙｱｯｾﾝ	1	INC.15,16
15	NO PART NO.	#	NIPPLE	ﾆｯﾌﾟﾙ	1	
16	03320-00180		O-RING	Oﾘﾝｸﾞ	1	
17	22N40-81001		PIPE	ﾊﾟｲﾌﾟ	1	
A4	22N40-81091		ELBOW-ASSY	ｴﾙﾎﾞｱｯｾﾝ	2	INC.18,19
18	NO PART NO.	#	ELBOW	ｴﾙﾎﾞ	2	
19	03320-00180		O-RING	Oﾘﾝｸﾞ	2	
20	24329-46201		CLIP	ｸﾘｯﾌﾟ	4	
21	22N40-82251		PLATE	ﾌﾟﾚｰﾄ	1	
22	01183-08016		BOLT	ﾎﾞﾙﾄ	2	
23	25790-94021		BAND,HOSE	ﾊﾞﾝﾄﾞ	3	
24	53675-55051		THREE-WAY	ｽﾘｰｳｪｲ	1	
25	04601-44294		HOSE,SYN VFHM435	ﾎｰｽ	1	
-	04601-44323		HOSE,SYN VFHM480	ﾎｰｽ	1	
-	04601-44343		HOSE,SYN VFHM500	ﾎｰｽ	1	
-	04601-44367		HOSE,SYN VFHM540	ﾎｰｽ	1	
-	04601-44375		HOSE,SYN VFHM550	ﾎｰｽ	1	
26	04710-04160		TUBE,RH VFHM435	ﾁｭｰﾌﾞ	1	
-	04710-04175		TUBE,RH VFHM480	ﾁｭｰﾌﾞ	1	
-	04710-04185		TUBE,RH VFHM500	ﾁｭｰﾌﾞ	1	
-	04710-04200		TUBE,RH VFHM540	ﾁｭｰﾌﾞ	1	
-	04710-04205		TUBE,RH VFHM550	ﾁｭｰﾌﾞ	1	
27	04710-04165		TUBE,LH VFHM435	ﾁｭｰﾌﾞ	1	
-	04710-04180		TUBE,LH VFHM480	ﾁｭｰﾌﾞ	1	
-	04710-04190		TUBE,LH VFHM500	ﾁｭｰﾌﾞ	1	
-	04710-04205		TUBE,LH VFHM540	ﾁｭｰﾌﾞ	1	
-	04710-04210		TUBE,LH VFHM550	ﾁｭｰﾌﾞ	1	
A5	234A8-41001		REGULATOR-ASSY,FLOW	ﾌﾛｰﾚｷﾞｭﾚｰﾀｱｯｾﾝ	1	INC.28-37
28	NO PART NO.	#	PLATE	ﾌﾟﾚｰﾄ	1	
29	27979-43101		SPRING	ｽﾌﾟﾘﾝｸﾞ	1	
30	NO PART NO.	#	NIPPLE	ﾆｯﾌﾟﾙ	1	
31	03300-00280		O-RING	Oﾘﾝｸﾞ	1	
32	NO PART NO.	#	CASE	ｹｰｽ	1	
33	NO PART NO.	#	SLEEVE	ｽﾘｰﾌﾞ	1	

FIG.224 MAST PIPING [VFHM2N8]

(M70208C0) マストパイピング

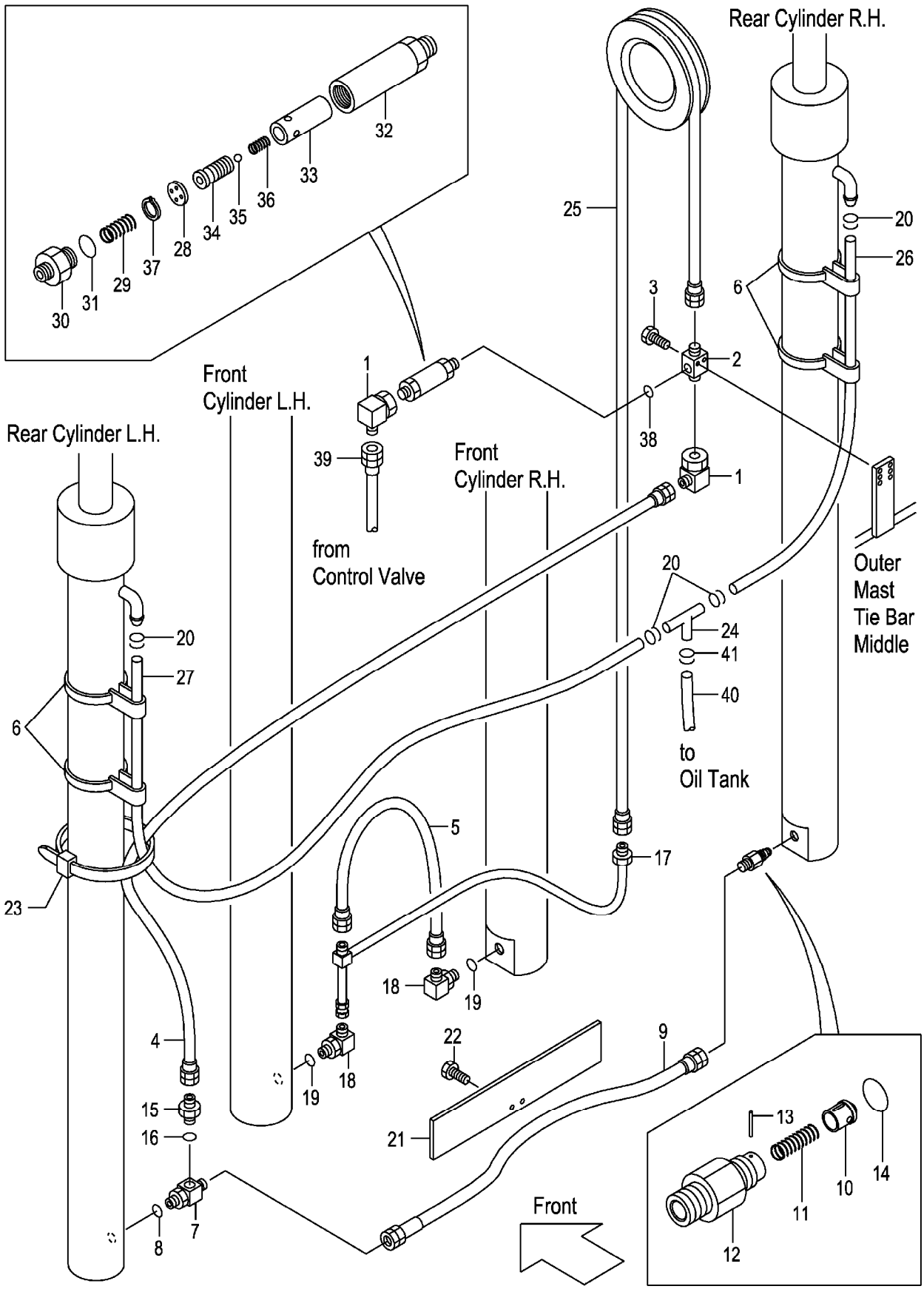

A:VFHM2N8(3T)

Item No	Part No.	Mark	Description		Req'd	Remarks : Serial No.
34	NO PART NO.	#	PISTON	ﾋﾟｽﾄﾝ	1	
35	24459-42951		BALL,NYLON	ﾎﾞｰﾙ	1	
36	214A8-44151		SPRING	ｽﾌﾟﾘﾝｸﾞ	1	
37	02110-00018		RING,SNAP	ｽﾅｯﾌﾟﾘﾝｸﾞ	1	
38	03320-00180		O-RING	Oﾘﾝｸﾞ	1	
39	22N40-82801		HOSE	ﾎｰｽ	1	
40	04710-04150		HOSE	ﾎｰｽ	1	
41	24329-46201		CLIP	ｸﾘｯﾌﾟ	2	

PARTS NUMBER INDEX

Part No.	Fig.No.	Part No.	Fig.No.	Part No.	Fig.No.	Part No.	Fig.No.
B-B6111-45075	216	B-B6727-04702	207	B-30131-65012	215	B-402-37128	166
B-B6111-45078	200	B-B6727-04801	207	B-30141-91048	200	B-402-37128	167
B-B6111-45079	216	B-B6727-04802	207	B-30161-55046	200	B-402-37128	167
B-B6111-45080	216	B-B6727-04901	207	B-30161-55046	216	B-402-37128	168
B-B6111-45080	216	B-B6727-04902	207	B-30161-91775	200	B-402-37128	168
B-B6111-45081	216	B-B6727-05001	207	B-30161-91775	216	B-402-37128	169
B-B6121-85007	207	B-B6727-05002	207	B-30181-85002	207	B-402-37128	169
B-B6121-85007	215	B-B6727-05101	207	B-30181-85002	215	B-402-37129	166
B-B6521-90004	207	B-B6727-05102	207	B-30191-45025	200	B-402-37129	167
B-B6521-90004	215	B-B6727-05201	207	B-30191-45025	216	B-402-37129	168
B-B6551-91018	200	B-B6727-05202	207	B-30191-65050	207	B-402-37129	169
B-B6567-14601	216	B-B6727-05301	207	B-30191-65050	215	B-94721-22101	207
B-B6567-14602	216	B-B6727-05302	207	B-30296-72103	200	B-94721-22101	215
B-B6567-14701	216	B-B6727-05401	207	B-30461-55039	200	B-95123-08000	207
B-B6567-14702	216	B-B6727-05402	207	B-30461-55039	216	B-95123-08000	215
B-B6567-14801	216	B-B6727-05501	207	B-3055A-00058	200	B-95151-04500	216
B-B6567-14802	216	B-B6727-05502	207	B-3055A-00058	216	B-95151-08500	207
B-B6567-14901	216	B-B6727-05601	207	B-3055B-00097	200	B-95151-08500	215
B-B6567-14902	216	B-B6727-05602	207	B-3055B-00097	216	BK-7341006000	66
B-B6567-15001	216	B-B6727-05701	207	B-30656-55008	216	BK-8059061000	66
B-B6567-15002	216	B-B6727-05702	207	B-30961-04512	200	BK-8104209010	66
B-B6567-15101	216	B-B6727-05801	207	B-30961-04512	216	BK-81431A4700	66
B-B6567-15102	216	B-B6727-05802	207	B-30961-65013	207	C-K2-11242-52000	93
B-B6567-15201	216	B-B6727-05901	207	B-30961-65013	215	C-11452-2B0-BF	188
B-B6567-15202	216	B-B6727-05902	207	B-402-00704-13	166	C-11452-2B0-BF	188
B-B6567-15301	216	B-B6727-06001	207	B-402-00704-13	167	C-11452-2B0-BF	190
B-B6567-15302	216	B-B6727-06002	207	B-402-00704-13	168	C-11452-2B0-BF	192
B-B6567-15401	216	B-B6727-18101	207	B-402-00704-13	169	C-11452-2B0-CZ	188
B-B6567-15402	216	B-B6727-18102	207	B-402-30905-02	166	C-11452-2B0-CZ	192
B-B6567-15501	216	B-B6727-18201	207	B-402-30905-03	167	C-11452-2B0-C	188
B-B6567-15502	216	B-B6727-18202	207	B-402-30905-04	168	C-11452-2B0-C	190
B-B6567-15601	216	B-B6727-18301	207	B-402-30905-05	169	C-11452-2B0-DN	188
B-B6567-15602	216	B-B6727-18302	207	B-402-36066	166	C-11452-2B0-DN	188
B-B6711-00001	207	B-B6727-18401	207	B-402-36066	167	C-11452-2B0-DN	192
B B6711 00001	215	B B6727 18402	207	B-402-36066	168	C-11452-2B0-DN	194
B-B6717-89101	215	B-B685A-00007	207	B-402-36066	169	C-11452-2B0-E	188
B-B6717-89102	215	B-B685A-00007	215	B-402-36067	166	C-11452-2B0-E	188
B-B6717-89201	215	B-B685B-00005	207	B-402-36067	166	C-11452-2B0-E	188
B-B6717-89202	215	B-B685B-00005	215	B-402-36067	167	C-11452-2B0-E	188
B-B6717-89301	215	B-B6983-85007	207	B-402-36067	167	C-11452-2B0-E	188
B-B6717-89302	215	B-B6983-85007	215	B 402 36067	168	C 11452 2B0 E	190
B-B6717-89401	215	B-C4300-22001	207	B-402-36067	168	C-11452-2B0-E	191
B-B6717-89402	215	B-C4300-22001	215	B-402-36067	169	C-11452-2B0-E	192
B-B6717-89501	215	B-023-06632-41	166	B-402-36067	169	C-11452-2B0-E	193
B-B6717-89502	215	B-023-06632-41	167	B-402-36151	166	C-11452-2B0-E	194
B-B6717-89601	215	B-023-06632-41	168	B-402-36151	166	C-11452-2B0-FI	188
B-B6717-89602	215	B-023-06632-41	169	B-402-36151	167	C-11452-2B0-FI	194
B-B6717-89701	215	B-026-50103	166	B-402-36151	167	C-11452-2B0-GR	188
B-B6717-89702	215	B-026-50103	167	B-402-36151	168	C-11452-2B0-GR	192
B-B6717-89801	215	B-026-50103	168	B-402-36151	168	C-11452-2B0-G	188
B-B6717-89802	215	B-026-50103	169	B-402-36151	169	C-11452-2B0-G	192
B-B6717-89901	215	B-26570-30125	207	B-402-36151	169	C-11452-2B0-H	188
B-B6717-89902	215	B-26570-30125	215	B-402-36603	166	C-11452-2B0-H	192
B-B6717-90001	215	B-30121-55043	200	B-402-36603	167	C-11452-2B0-I	188
B-B6717-90002	215	B-30121-55043	216	B-402-36603	168	C-11452-2B0-I	192
B-B6717-90101	215	B-30131-45017	200	B-402-36603	169	C-11452-2B0-NR	188
B-B6717-90102	215	B-30131-45017	216	B-402-36924	167	C-11452-2B0-NR	192
B-B6727-04601	207	B-30131-55018	200	B-402-36924	168	C-11452-2B0-O	188
B-B6727-04602	207	B-30131-55018	216	B-402-36924	169	C-11452-2B0-O	192
B-B6727-04701	207	B-30131-65012	207	B-402-37128	166	C-11452-2B0-PL	188

PARTS NUMBER INDEX

Part No.	Fig.No.	Part No.	Fig.No.	Part No.	Fig.No.	Part No.	Fig.No.
C-11452-2B0-PL	192	C-11452-2N0-S	188	01030-06010	98	01100-14030	204
C-11452-2B0-P	188	C-11452-2N0-S	190	01031-06065	123	01100-14030	212
C-11452-2B0-P	192	C-11452-2N0-S	192	01033-05014	29	01100-14030	212
C-11452-2B0-R	188	C-11452-2N0-TR	188	01033-05014	30	01100-14030	212
C-11452-2B0-R	190	C-11452-2N0-TR	192	01033-06012	61	01100-14030	212
C-11452-2B0-SW	188	C-11452-2N5-D	188	01043-03010	26	01100-14030	220
C-11452-2B0-SW	194	C-11452-2N5-D	189	01044-04014	72	01100-14035	204
C-11452-2B0-S	188	C-51-B2101-02322	93	01066-08008	68	01100-14035	212
C-11452-2B0-S	188	C-52-10901-64550	93	01066-10012	186	01100-16020	150
C-11452-2B0-S	190	C-52-10901-64560	93	01066-10012	186	01100-16040	118
C-11452-2B0-S	192	C-52-11204-69010	93	01100-04012	26	01100-16045	100
C-11452-2B0-TR	188	C-52-11207-02380	93	01100-05010	1	01100-16050	221
C-11452-2B0-TR	192	C-52-11211-14530	93	01100-06020	78	01100-16060	213
C-11452-2B5-D	188	C-52-11211-24530	93	01100-06055	177	01100-16075	207
C-11452-2B5-D	189	C-52-11218-14502	93	01100-06055	179	01100-16075	215
C-11452-2N0-BF	188	C-52-11218-15152	93	01100-08016	56	01103-08016	58
C-11452-2N0-BF	188	C-52-11218-15161	93	01100-08020	53	01103-08016	60
C-11452-2N0-BF	190	C-52-11218-24502	93	01100-08020	53	01103-08016	62
C-11452-2N0-BF	192	C-52-11218-25152	93	01100-08020	53	01103-08016	70
C-11452-2N0-CZ	188	C-52-11218-25161	93	01100-08020	56	01103-08016	92
C-11452-2N0-CZ	192	C-52-11227-05094	93	01100-08020	65	01103-08016	98
C-11452-2N0-C	188	C-52-11232-54540	93	01100-08020	80	01103-08016	99
C-11452-2N0-C	190	C-52-11239-51270	93	01100-08020	81	01103-08020	63
C-11452-2N0-DN	188	C-52-11239-54011	93	01100-08025	61	01103-08030	69
C-11452-2N0-DN	188	C-52-11239-54071	93	01100-08025	71	01103-08035	58
C-11452-2N0-DN	192	C-52-11249-54010	93	01100-08025	124	01103-08035	59
C-11452-2N0-DN	194	C-52-11249-55310	93	01100-08030	19	01103-08035	60
C-11452-2N0-E	188	C-52-13117-02350	93	01100-08065	6	01103-08040	58
C-11452-2N0-E	188	C 52 13117 11000 S	93	01100-08065	8	01103-08040	58
C-11452-2N0-E	188	C-52-13117-13300-P	93	01100-10025	125	01103-08040	59
C-11452-2N0-E	188	C-52-13117-21000-S	93	01100-10025	127	01103-08040	59
C-11452-2N0-E	188	C-52-13117-23300-P	93	01100-10025	128	01103-08040	60
C-11452-2N0-E	190	C-52-13117-52000	93	01100-10025	129	01103-08040	60
C-11452-2N0-E	191	C-52-13117-53000-Z	93	01100-10025	130	01103-08040	69
C 11452 2N0 E	192	C-52-13117-83010-Z	93	01100-10025	132	01103-10018	207
C-11452-2N0-E	193	C-52-13117-83020-Z	93	01100-10030	128	01103-10018	215
C-11452-2N0-E	194	C-52-13124-24600-S	93	01100-10030	131	01103-10020	222
C-11452-2N0-FI	188	C-52-30780-02340	93	01100-10050	58	01103-10025	132
C-11452-2N0-FI	194	C-52-51302-53840	93	01100-10050	58	01103-10030	60
C-11452-2N0-GR	188	C-52-51308-54160	93	01100-10050	59	01103-10030	60
C-11452-2N0-GR	192	C-52-51342-54110	93	01100 10050	59	01103 10030	65
C-11452-2N0-G	188	C-90-2300-1201	93	01100-10050	60	01103-10030	69
C-11452-2N0-G	192	C-90-9200-0800	93	01100-10050	60	01103-10030	69
C-11452-2N0-H	188	HC26094-17021	96	01100-12020	121	01103-10035	60
C-11452-2N0-H	192	HC32G4-10101	96	01100-12070	223	01103-10035	60
C-11452-2N0-I	188	HC516G2-42411	96	01100-12080	222	01103-10035	60
C-11452-2N0-I	192	R-402-00710-12	164	01100-14025	198	01103-10035	60
C-11452-2N0-NR	188	R-402-00710-12	165	01100-14025	204	01103-10035	77
C-11452-2N0-NR	192	R-402-65004-03	164	01100-14025	204	01103-10035	132
C-11452-2N0-O	188	R-402-65004-28	165	01100-14025	204	01103-10040	63
C-11452-2N0-O	192	R-403-24323	165	01100-14025	204	01103-10040	69
C-11452-2N0-PL	188	W-K3PK-M	196	01100-14025	212	01103-10045	197
C-11452-2N0-PL	192	W-K3PK-M	202	01100-14025	212	01103-10045	203
C-11452-2N0-P	188	W-K3PK-M	210	01100-14025	212	01103-10045	211
C-11452-2N0-P	192	W-K3PK-M	218	01100-14025	212	01103-10045	219
C-11452-2N0-R	188	01030-04014	72	01100-14025	212	01103-10050	132
C-11452-2N0-R	190	01030-04020	78	01100-14025	220	01103-10060	69
C-11452-2N0-SW	188	01030-05055	42	01100-14030	198	01103-10065	65
C-11452-2N0-SW	194	01030-05055	43	01100-14030	204	01103-10075	132
C-11452-2N0-S	188	01030-05055	43	01100-14030	204	01103-12025	1

PARTS NUMBER INDEX

Part No.	Fig.No.	Part No.	Fig.No.	Part No.	Fig.No.	Part No.	Fig.No.
01103-12025	2	01183-08012	61	01185-06016	31	01185-08025	86
01103-12030	1	01183-08012	159	01185-06016	32	01185-08025	160
01103-12030	2	01183-08012	160	01185-06016	33	01185-08025	160
01103-14040	200	01183-08012	160	01185-06016	34	01185-08030	154
01103-14040	208	01183-08012	171	01185-08012	83	01185-10016	154
01103-14040	216	01183-08012	172	01185-08012	83	01185-10055	164
01103-16065	199	01183-08012	173	01185-08012	84	01185-10055	165
01103-16065	205	01183-08012	174	01185-08015	161	01186-08020	56
01103-16065	213	01183-08016	3	01185-08016	4	01186-08025	77
01103-16065	221	01183-08016	4	01185-08016	5	01186-10016	185
01106-10030	92	01183-08016	55	01185-08016	6	01186-10016	186
01106-10035	92	01183-08016	55	01185-08016	8	01186-10020	23
01106-10045	92	01183-08016	62	01185-08016	9	01186-10020	24
01106-10060	92	01183-08016	70	01185-08016	10	01186-10020	25
01106-12040	87	01183-08016	127	01185-08016	11	01186-10020	217
01109-08020	21	01183-08016	128	01185-08016	12	01186-10030	102
01109-12025	150	01183-08016	129	01185-08016	18	01186-10030	102
01110-10025	95	01183-08016	151	01185-08016	21	01186-10030	102
01110-36200	148	01183-08016	224	01185-08016	31	01186-12025	119
01110-36200	149	01183-08020	7	01185-08016	32	01186-12025	150
01113-10035	95	01183-08020	8	01185-08016	33	01186-12030	21
01113-10035	96	01183-08020	185	01185-08016	34	01186-12040	119
01113-30370	149	01183-08025	183	01185-08016	39	01213-10025	61
01120-10040	128	01183-08035	70	01185-08016	40	01218-10025	1
01120-10050	126	01183-10030	58	01185-08016	47	01218-10035	2
01120-12040	200	01183-10030	58	01185-08016	47	01400-00004	78
01120-12040	223	01183-10030	59	01185-08016	48	01400-00006	39
01120-16040	222	01183-10030	59	01185-08016	48	01400-00006	40
01123-10045	63	01183-10035	58	01185-08016	49	01400-00006	78
01141-06012	98	01183-10035	58	01185-08016	49	01400-00006	124
01141-06012	99	01183-10035	58	01185-08016	50	01400-00006	151
01170-04012	21	01183-10035	58	01185-08016	50	01400-00006	153
01170-05045	69	01183-10035	59	01185-08016	55	01400-00006	161
01171-06025	119	01183-10035	59	01185-08016	56	01400-00008	1
01181 08016	152	01183 10035	59	01185-08016	65	01400-00008	1
01181-08016	152	01184-10012	217	01185-08016	71	01400-00008	20
01182-08025	20	01184-10016	63	01185-08016	98	01400-00008	48
01183-05010	21	01184-10020	208	01185-08016	124	01400-00008	49
01183-06010	31	01184-10025	132	01185-08016	125	01400-00008	50
01183-06010	32	01184-10025	142	01185-08016	126	01400-00008	53
01183-06010	33	01184-10025	221	01185 08016	130	01400 00008	53
01183-06010	34	01184-10030	130	01185-08016	131	01400-00008	53
01183-06010	130	01184-10030	131	01185-08016	132	01400-00008	69
01183-06010	131	01184-10030	131	01185-08016	151	01400-00008	70
01183-06010	132	01184-10030	132	01185-08016	154	01400-00008	71
01183-06012	21	01184-10040	217	01185-08016	156	01400-00008	72
01183-06012	125	01184-10040	224	01185-08016	157	01400-00008	80
01183-06012	126	01184-10050	142	01185-08016	158	01400-00008	81
01183-06012	171	01184-10055	132	01185-08016	180	01400-00008	85
01183-06012	172	01184-12025	197	01185-08016	180	01400-00008	85
01183-06012	173	01184-12025	203	01185-08016	185	01400-00008	86
01183-06012	174	01184-12025	206	01185-08020	11	01400-00008	162
01183-06016	209	01184-12025	206	01185-08020	12	01400-00008	163
01183-06016	209	01184-12025	206	01185-08020	20	01400-00010	58
01183-06020	206	01184-12025	211	01185-08020	48	01400-00010	58
01183-06020	206	01184-12025	214	01185-08020	53	01400-00010	59
01183-06020	206	01184-12025	219	01185-08020	61	01400-00010	59
01183-06020	214	01184-12030	136	01185-08020	217	01400-00010	60
01183-08012	21	01185-04010	98	01185-08025	85	01400-00010	60
01183-08012	55	01185-04012	26	01185-08025	85	01400-00010	63

PARTS NUMBER INDEX

Part No.	Fig.No.	Part No.	Fig.No.	Part No.	Fig.No.	Part No.	Fig.No.
01400-00010	98	02000-00005	171	02000-20010	208	02010-00014	212
01400-00010	99	02000-00005	172	02000-20010	208	02010-00014	220
01400-00010	102	02000-00005	173	02000-20010	216	02010-00016	100
01400-00010	125	02000-00005	174	02000-20010	216	02010-00016	118
01400-00010	126	02000-00006	39	02000-20010	223	02010-00016	150
01400-00010	130	02000-00006	40	02000-20016	207	02010-00016	207
01400-00010	131	02000-00006	61	02000-20016	215	02010-00016	213
01400-00010	132	02000-00006	124	02001-00008	25	02010-00016	215
01400-00010	200	02000-00006	125	02001-00012	150	02010-00016	221
01400-00010	222	02000-00006	125	02010-00004	26	02010-00020	87
01400-00010	223	02000-00006	126	02010-00004	72	02010-00030	149
01400-00012	1	02000-00006	126	02010-00004	78	02010-00036	148
01400-00012	2	02000-00006	128	02010-00005	1	02010-00036	149
01400-00012	111	02000-00006	153	02010-00006	39	02010-10006	98
01400-00012	113	02000-00008	1	02010-00006	40	02010-10006	99
01400-00012	115	02000-00008	1	02010-00006	78	02010-20010	200
01400-00012	117	02000-00008	6	02010-00006	124	02010-20010	208
01400-00012	118	02000-00008	20	02010-00006	151	02010-20010	208
01400-00012	200	02000-00008	23	02010-00006	153	02010-20010	216
01400-00012	223	02000-00008	98	02010-00006	161	02010-20010	216
01400-00018	200	02000-00008	99	02010-00006	177	02010-20010	223
01400-00018	207	02000-00008	130	02010-00006	179	02011-00008	58
01400-00018	215	02000-00008	131	02010-00008	1	02011-00008	60
01400-00018	216	02000-00008	132	02010-00008	1	02011-00008	62
01400-00018	222	02000-00008	151	02010-00008	6	02011-00008	63
01400-00018	223	02000-00008	152	02010-00008	8	02011-00008	69
01400-10020	87	02000-00008	159	02010-00008	19	02011-00008	69
01400-10020	88	02000-00008	160	02010-00008	20	02011-00008	70
01400-20008	23	02000-00008	160	02010-00008	23	02011-00008	92
01400-20010	24	02000-00010	13	02010-00008	56	02011-00008	98
01400-20010	25	02000-00010	19	02010-00008	58	02011-00008	99
01400-30008	25	02000-00010	21	02010-00008	59	02011-00010	63
01402-00006	61	02000-00010	23	02010-00008	60	02011-00010	65
01402-00008	61	02000-00010	24	02010-00008	72	02011-00010	69
01402 00008	71	02000 00010	24	02010-00008	85	02011-00010	92
01402-00008	124	02000-00010	25	02010-00008	85	02011-00010	95
01402-00008	137	02000-00010	98	02010-00008	86	02011-00010	96
01402-00008	139	02000-00010	99	02010-00008	162	02011-00010	207
01402-00008	140	02000-00010	102	02010-00008	163	02011-00010	215
01402-00010	127	02000-00010	125	02010-00010	24	02011-00010	222
01402-00010	128	02000-00010	126	02010 00010	25	02011 00012	1
01402-00010	129	02000-00010	132	02010-00010	58	02011-00012	2
01402-00010	130	02000-00010	151	02010-00010	58	02011-00012	87
01402-00010	132	02000-00010	222	02010-00010	59	02011-00012	111
01402-00010	196	02000-00012	21	02010-00010	59	02011-00012	113
01402-00010	202	02000-00012	94	02010-00010	60	02011-00012	115
01402-00010	210	02000-00012	118	02010-00010	60	02011-00012	117
01402-00010	218	02000-00012	206	02010-00010	98	02011-00014	200
01402-00012	222	02000-00012	206	02010-00010	99	02011-00014	208
01402-00012	223	02000-00012	206	02010-00010	131	02011-00014	216
01402-00016	222	02000-00012	214	02010-00010	132	02011-00016	199
01402-00018	207	02000-00014	94	02010-00010	222	02011-00016	205
01402-10014	94	02000-00016	213	02010-00012	118	02011-00016	213
01412-00030	98	02000-00016	221	02010-00012	121	02011-00016	221
01412-00030	99	02000-00022	63	02010-00012	223	02013-00008	21
01420-00006	39	02000-00024	62	02010-00014	198	02013-00008	25
01420-00006	40	02000-00027	70	02010-00014	204	02013-00012	150
02000-00004	21	02000-00030	98	02010-00014	212	02100-00020	63
02000-00004	26	02000-00030	99	02010-00014	212	02100-00020	94
02000-00004	78	02000-20010	200	02010-00014	212	02100-00022	63

PARTS NUMBER INDEX

Part No.	Fig.No.	Part No.	Fig.No.	Part No.	Fig.No.	Part No.	Fig.No.
02100-00025	62	02262-06015	126	03320-00140	97	04150-20404	209
02100-00025	70	02262-06020	61	03320-00140	170	04150-20404	217
02100-00028	70	02262-06020	128	03320-00140	177	04601-44241	217
02100-00030	64	02262-08025	130	03320-00140	179	04601-44266	217
02100-00040	68	02262-08025	131	03320-00140	180	04601-44290	217
02100-00040	200	02262-08025	132	03320-00140	184	04601-44294	224
02100-00040	207	02262-08045	159	03320-00140	201	04601-44320	217
02100-00040	215	02262-08045	160	03320-00140	201	04601-44323	224
02100-00040	216	02262-08045	160	03320-00140	209	04601-44339	217
02100-00040	223	02262-10030	132	03320-00140	209	04601-44343	224
02100-00045	197	02270-01014	201	03320-00140	209	04601-44364	217
02100-00045	203	02270-01014	209	03320-00140	217	04601-44367	224
02110-00014	222	02270-01014	217	03320-00140	217	04601-44371	217
02110-00018	201	02270-01014	224	03320-00140	224	04601-44375	224
02110-00018	209	02270-04020	69	03320-00140	224	04601-44408	217
02110-00018	217	02270-04035	69	03320-00180	164	04601-44450	217
02110-00018	224	02360-05019	70	03320-00180	165	04601-44493	217
02110-00022	69	02432-01008	188	03320-00180	165	04601-44525	217
02110-00028	222	02432-01008	211	03320-00180	165	04691-02035	180
02110-00030	69	03000-06207	64	03320-00180	170	04691-02035	180
02110-00035	118	03000-06208	64	03320-00180	177	04691-02038	180
02110-00037	94	03000-06208	64	03320-00180	179	04691-02100	182
02120-00038	64	03000-06208	67	03320-00180	201	04691-04050	179
02120-00040	64	03000-06210	91	03320-00180	209	04691-04070	177
02120-00040	67	03000-06306	64	03320-00180	209	04691-04070	179
02121-00058	68	03000-06306	64	03320-00180	217	04691-04123	176
02200-02020	130	03000-06306	67	03320-00180	217	04691-04123	178
02200-02020	131	03000-06306	68	03320-00180	217	04710-04005	145
02200-02020	132	03003-06306	64	03320-00180	224	04710-04015	182
02200-02020	159	03020-06904	94	03320-00180	224	04710-04018	182
02200-02020	160	03071-30207	98	03320-00180	224	04710-04045	182
02200-02020	160	03071-30207	99	03320-00210	222	04710-04060	182
02200-03020	125	03071-30211	98	03320-00240	170	04710-04080	185
02200-03020	126	03071-30211	99	03320-00240	208	04710-04090	185
02200 03030	207	03071 30214	88	03320-00280	201	04710-04110	201
02200-03030	215	03126-83201	98	03320-00280	209	04710-04120	201
02200-03030	216	03126-83201	99	03320-00290	164	04710-04130	201
02200-03030	222	03146-13201	98	03320-00290	165	04710-04135	201
02200-03030	223	03146-13201	99	03320-00340	208	04710-04145	182
02200-03040	200	03190-00006	208	03320-00340	223	04710-04145	201
02200-06055	98	03190-00006	208	03340 00090	222	04710 04145	201
02200-06055	99	03190-00013	63	03340-00140	164	04710-04145	201
02200-16010	61	03192-00012	88	03340-00140	165	04710-04150	217
02200-16010	125	03192-10012	88	03350-00750	118	04710-04150	217
02200-16010	126	03192-30072	64	03360-00210	222	04710-04150	224
02200-16010	171	03211-09501	88	04000-00300	185	04710-04155	217
02200-16010	172	03217-08501	98	04112-00202	21	04710-04160	201
02200-16010	173	03217-08501	99	04134-20202	132	04710-04160	224
02200-16010	174	03300-00160	63	04134-20303	180	04710-04165	201
02200-16015	125	03300-00180	63	04134-20404	177	04710-04165	217
02200-16015	126	03300-00280	217	04134-20404	179	04710-04165	224
02200-16015	128	03300-00280	224	04134-20404	217	04710-04170	201
02200-32020	132	03310-00300	63	04134-20404	224	04710-04170	201
02212-06016	69	03320-00110	97	04150-20202	97	04710-04170	217
02212-10020	87	03320-00110	132	04150-20202	132	04710-04175	201
02212-10020	92	03320-00110	132	04150-20202	170	04710-04175	217
02212-12020	63	03320-00110	170	04150-20202	170	04710-04175	224
02212-12020	65	03320-00110	170	04150-20303	97	04710-04180	201
02262-06015	61	03320-00140	97	04150-20404	165	04710-04180	201
02262-06015	125	03320-00140	97	04150-20404	170	04710-04180	217

PARTS NUMBER INDEX

Part No.	Fig.No.	Part No.	Fig.No.	Part No.	Fig.No.	Part No.	Fig.No.
04710-04180	224	04901-00190	99	06005-60015	108	09001-10055	216
04710-04185	201	04901-00190	100	06005-65010	113	09001-10057	207
04710-04185	224	04901-00190	127	06005-65010	114	09001-10057	215
04710-04190	181	04901-00190	128	06005-81515	104	09001-10059	207
04710-04190	201	04901-00190	129	06005-81515	110	09001-10059	207
04710-04190	217	04901-00191	98	06005-81515	110	09001-10059	215
04710-04190	224	04901-00191	99	06006-60015	108	09001-10059	216
04710-04195	201	04911-00020	181	06006-65010	111	09001-10063	216
04710-04195	201	04911-00021	182	06006-65010	112	09001-10065	207
04710-04195	201	04911-00021	185	06006-65010	113	09001-10065	215
04710-04195	217	04911-00021	201	06006-65010	114	09001-10067	216
04710-04200	217	04911-00021	201	06007-60015	108	09001-10069	207
04710-04200	217	04911-00021	217	06007-65010	113	09001-10071	215
04710-04200	224	04911-00021	217	06007-65010	114	09001-10071	216
04710-04205	201	04911-00022	57	06007-81515	104	09001-10071	216
04710-04205	217	04911-00023	184	06007-81515	110	09001-10073	207
04710-04205	224	04911-00032	185	06007-81515	110	09001-10077	207
04710-04205	224	04911-00040	176	06701-65010	111	09001-10077	216
04710-04210	201	04911-00040	177	06701-65010	112	09001-10079	215
04710-04210	224	04911-00040	178	06701-65010	113	09001-10081	207
04710-04215	201	04911-00040	179	06701-65010	114	09001-10083	215
04710-04215	217	04911-00042	176	06710-60015	108	09001-10085	216
04710-04220	201	04911-00042	177	06711-60015	108	09001-10089	207
04710-04220	217	04911-00042	178	06711-65010	111	09001-10091	216
04710-04225	201	04911-00042	179	06711-65010	112	09001-10097	207
04710-04225	217	04911-00044	14	06711-65010	113	09001-10097	216
04710-04230	201	04911-00044	15	06711-65010	114	10A63-10211	62
04710-04230	201	04911-00044	176	06731-00120	108	110F7-12001	164
04710-04230	201	04911-00044	177	06731-00120	110	11243-82081	68
04710-04235	217	04911-00044	178	06806-60015	109	11243-82091	68
04710-04240	201	04911-00044	179	06806-65010	115	11243-82161	68
04710-04240	217	04911-00046	176	06806-65010	116	11243-82181	68
04710-04250	201	04911-00046	177	06806-81515	105	11243-82211	68
04710-04250	201	04911-00046	178	06807-28915	105	115G3-82111	65
04710 04260	201	04911 00046	179	06807-65010	115	115G3-82241	65
04710-04260	217	04911-00050	15	06807-65010	115	115G3-82251	65
04710-04265	201	04911-00055	8	06807-65010	115	115G3-82351	68
04710-04265	217	04911-00060	5	06807-81515	105	115G3-82361	68
04710-04275	201	04911-00060	6	06807-81515	105	115G3-82671	69
04710-04280	217	04911-00060	7	06841-60015	109	116H3-82101	65
04710-04285	201	04911-00060	8	06841 65010	115	116H3 82101	67
04710-04285	217	04911-00070	6	06843-60015	109	116H3-82101	69
04710-04295	201	04911-00070	8	06843-65010	115	116H3-82201	69
04710-04295	217	04911-00073	6	06851-60015	109	118H3-82231	69
04710-04300	201	04911-00073	8	06853-65010	115	12N42-50201	58
04710-04300	217	04911-00075	5	09001-10035	207	12N42-50401	58
04710-04320	201	04911-00075	7	09001-10039	207	12N43-10201	62
04710-04330	201	04911-00090	7	09001-10039	215	12N43-10211	62
04710-04355	201	04911-00090	8	09001-10041	207	12N43-12001	62
04710-06035	185	04913-10200	31	09001-10043	215	12N43-12011	62
04901-00100	62	04913-10200	32	09001-10045	207	12N43-12021	62
04901-00100	186	04913-10200	33	09001-10045	207	12N43-12021	70
04901-00100	199	04913-10200	34	09001-10047	207	12N43-12101	62
04901-00100	205	04913-11100	130	09001-10047	215	12N43-12101	70
04901-00100	213	04913-11100	131	09001-10051	207	12N43-12111	62
04901-00100	221	04913-11100	132	09001-10051	215	12N43-12151	62
04901-00190	62	04913-11200	57	09001-10051	216	12N43-12201	62
04901-00190	98	04913-11380	121	09001-10053	207	12N43-19801	62
04901-00190	98	04914-00019	145	09001-10053	215	12N43-19801	64
04901-00190	99	04914-00019	209	09001-10055	207	12N43-19811	63

PARTS NUMBER INDEX

Part No.	Fig.No.	Part No.	Fig.No.	Part No.	Fig.No.	Part No.	Fig.No.
12N43-40251	64	12N53-52181	92	12N53-82481	69	134A3-52051	92
12N43-42001	63	12N53-52191	92	12N53-82501	69	134A7-10301	164
12N43-42031	63	12N53-52201	92	12N53-82531	69	134B3-82401	68
12N43-42051	64	12N53-52211	92	12N53-82551	69	134G3-82111	68
12N43-42061	64	12N53-52221	92	12N53-82571	69	134G3-82121	68
12N43-42071	64	12N53-52231	92	12N53-82581	69	134G3-82131	68
12N43-42101	64	12N53-52241	92	12N53-82621	59	134G3-82141	68
12N43-42111	64	12N53-52251	92	12N53-82621	65	134G3-89811	68
12N43-42121	64	12N53-52271	92	12N53-82621	89	134G3-89831	68
12N43-42131	64	12N53-52291	92	12N53-82621	92	134H3-10201	70
12N43-42141	64	12N53-52341	92	12N53-82641	66	134H3-10211	70
12N43-42151	64	12N53-52351	92	12N53-82641	89	134H7-10301	165
12N43-42161	64	12N53-52381	92	12N53-82701	69	135C3-12081	62
12N43-42171	64	12N53-52431	92	12N53-82711	65	139B3-82121	69
12N43-42191	64	12N53-52441	92	12N53-82721	69	14603-52131	92
12N43-42201	64	12N53-52451	92	12N53-82731	69	15573-42021	64
12N43-42211	64	12N53-52461	92	12N53-82741	69	15573-42151	63
12N43-42221	64	12N53-52471	92	12N53-82751	69	15573-42151	69
12N43-42251	64	12N53-52481	92	12N53-82761	65	15573-42151	70
12N43-42261	64	12N53-52491	92	12N53-82771	69	15573-42151	87
12N43-42271	64	12N53-52501	92	12N53-82781	69	15583-82101	67
12N43-42281	64	12N53-52511	92	12N53-82791	69	15583-82411	69
12N43-42291	64	12N53-59801	92	12N53-89801	65	15583-82421	69
12N43-42301	64	12N53-59811	92	12N53-89801	67	15583-82441	69
12N43-42321	64	12N53-59821	92	12N53-89811	65	15583-82451	69
12N43-42351	64	12N53-80201	68	12N53-89831	69	15583-82461	69
12N43-42401	63	12N53-80301	65	12P42-50201	60	15583-82521	65
12N43-42411	63	12N53-80311	65	12P43-12011	70	15583-82521	67
12N43-42421	63	12N53-80321	66	12P43-12021	70	15583-82571	67
12N43-42431	63	12N53-80341	69	12P43-12031	70	15943-82701	70
12N43-42441	63	12N53-82001	65	12P43-12051	70	15943-83261	65
12N43-42471	63	12N53-82011	65	12P43-12061	70	16113-52121	92
12N43-42481	63	12N53-82021	65	12P43-12081	70	16113-52141	92
12N43-42501	63	12N53-82041	65	12P43-12111	70	16402-54331	75
12N43 42511	63	12N53 82061	62	12P43-12141	70	16402-54331	79
12N43-42521	63	12N53-82061	65	12P43-12301	70	16402-54331	80
12N43-42551	64	12N53-82081	65	12P43-19801	64	16402-54331	81
12N43-42561	64	12N53-82091	67	12P43-19801	70	19502-52552	70
12N43-42571	64	12N53-82101	68	12003-12021	62	20A71-02101	5
12N43-42581	64	12N53-82111	68	12003-42052	63	20A71-02101	7
12N52-50201	59	12N53-82131	68	12003 42061	63	205A2 63311	78
12N53-22001	91	12N53-82151	67	12003-42251	64	209K2-40501	30
12N53-22011	91	12N53-82161	67	12003-42451	63	209K2-42002	42
12N53-32001	89	12N53-82171	67	12003-42461	63	209K2-42002	43
12N53-32011	89	12N53-82201	64	12163-82331	65	209K2-42002	43
12N53-50201	90	12N53-82201	67	12163-82421	65	209K2-42021	42
12N53-50231	90	12N53-82211	64	12163-82541	63	209K2-42021	43
12N53-50301	92	12N53-82211	67	12163-82541	65	209K2-42021	43
12N53-52031	92	12N53-82221	69	12163-82541	67	209K2-42041	42
12N53-52061	92	12N53-82231	69	12163-82541	70	209K2-42041	43
12N53-52081	92	12N53-82251	69	12163-82561	66	209K2-42041	43
12N53-52091	92	12N53-82291	69	124G3-52011	92	209K2-42351	31
12N53-52101	92	12N53-82321	69	124T3-42651	90	209K2-42351	32
12N53-52111	92	12N53-82331	69	124T3-42661	90	209K2-42351	33
12N53-52121	92	12N53-82351	69	124T3-43041	20	209K2-42351	34
12N53-52131	92	12N53-82361	69	130C2-60302	78	209K2-42351	72
12N53-52141	92	12N53-82371	69	131N3-12031	70	209K2-42351	83
12N53-52151	92	12N53-82401	69	131N3-12151	70	209K2-42351	83
12N53-52161	92	12N53-82421	69	134A3-42071	64	209K2-42351	84
12N53-52171	92	12N53-82451	69	134A3-52041	92	209K2-42351	85

PARTS NUMBER INDEX

Part No.	Fig.No.	Part No.	Fig.No.	Part No.	Fig.No.	Part No.	Fig.No.
209K2-42351	85	21232-32551	23	214A4-32161	98	214A8-52051	118
209K2-42351	86	21232-32551	24	214A4-32161	99	214A9-20101	195
209K2-43001	156	21232-32551	25	214A4-32201	100	214A9-20101	195
209K2-43001	157	21237-52051	143	214A4-32211	100	214J0-51701	208
209K2-43001	158	21237-52051	143	214A5-22001	125	214J0-51711	208
209P6-42831	16	21237-52062	143	214A5-22001	126	214J0-51721	208
209P6-42831	155	21237-52062	143	214A5-32312	130	214J0-51731	208
209P6-42831	155	21239-12501	189	214A5-32312	140	214J0-51741	208
209P6-42831	159	213L2-52001	60	214A5-33012	140	214J0-51751	208
209P6-42831	160	213T1-02011	3	214A5-33031	140	214J0-51761	208
209P6-42831	160	213T1-02021	3	214A5-33041	140	214J0-51771	208
209P7-62151	132	214A0-62151	209	214A5-33052	140	214J0-51781	208
209P7-62531	184	214A0-72701	213	214A5-33062	140	214J0-51791	208
210F2-42021	42	214A0-72701	221	214A5-53012	189	214J0-51801	208
210F2-42021	43	214A0-82681	207	214A6-42252	56	214J0-51811	208
210F2-42021	43	214A0-82681	215	214A6-42252	122	214J0-51821	208
210F2-42031	42	214A0-82831	199	214A6-42771	155	214J0-51831	208
210F2-42031	43	214A0-82831	207	214A6-42771	155	214J0-51841	208
210F2-42031	43	214A0-82831	215	214A6-42781	161	214J0-51851	208
21152-22151	17	214A2-12001	13	214A6-42781	161	214J0-51861	208
21152-42091	31	214A2-12001	19	214A7-42071	61	214J0-51871	208
21152-42091	32	214A2-12021	13	214A7-42071	61	214J0-51881	208
21152-42091	33	214A2-12111	13	214A7-42071	171	214J0-53681	208
21152-42091	34	214A2-12121	13	214A7-42071	171	214J0-53681	208
21152-42091	84	214A2-12141	13	214A7-42071	172	214J0-53781	208
21152-42091	86	214A2-12141	13	214A7-42071	172	214J3-02011	88
212T2-42311	39	214A2-12201	13	214A7-42071	172	214J8-10501	196
212Y0-50501	207	214A2-12201	13	214A7-42071	173	214J8-10501	196
212Y0-50511	207	214A2-13001	13	214A7-42071	173	214J8-10501	202
212Y0-50521	207	214A2-13001	13	214A7-42071	173	214J8-10501	202
212Y0-50531	207	214A2-13011	13	214A7-42071	173	214J8-10501	210
212Y0-50541	207	214A2-13011	13	214A7-42071	174	214J8-10501	210
212Y0-50551	207	214A2-42331	9	214A7-42071	174	214J8-10501	218
212Y0-50561	207	214A2-42331	10	214A7-42071	174	214J8-10501	218
212Y0 50571	207	214A2 42331	128	214A7-42071	174	214J8-10511	196
212Y0-50581	207	214A2-42611	13	214A7-42071	174	214J8-10511	202
212Y0-50591	207	214A2-42611	31	214A7-42181	175	214J8-10511	210
212Y0-50601	207	214A2-42611	32	214A7-42181	175	214J8-10511	218
212Y0-50611	207	214A2-42611	33	214A7-42181	175	214J8-10521	196
212Y0-50621	207	214A2-42611	34	214A7-42181	175	214J8-10521	202
212Y0-50631	207	214A2-42611	52	214A7 42191	175	214J8 10521	210
212Y0-50641	207	214A2-42611	54	214A7-42201	175	214J8-10521	218
212Y0-50651	207	214A2-42611	82	214A8-02201	199	214J8-10531	196
212Y0-80501	215	214A2-42611	83	214A8-02201	205	214J8-10531	202
212Y0-80511	215	214A2-42611	83	214A8-02201	213	214J8-10531	210
212Y0-80521	215	214A2-42611	84	214A8-02201	221	214J8-10531	218
212Y0-80531	215	214A2-42611	85	214A8-42571	208	214J8-10541	196
212Y0-80541	215	214A2-42611	85	214A8-42571	208	214J8-10541	202
212Y0-80551	215	214A2-42611	86	214A8-42661	200	214J8-10541	210
212Y0-80561	215	214A2-42621	79	214A8-42661	208	214J8-10541	218
212Y0-80571	215	214A2-42621	80	214A8-42661	216	214J8-10551	196
212Y0-80581	215	214A2-42621	81	214A8-42661	222	214J8-10551	202
212Y0-80591	215	214A2-44001	55	214A8-42661	223	214J8-10551	210
212Y0-80601	215	214A2-52002	61	214A8-44151	201	214J8-10551	218
212Y0-82001	207	214A2-52012	61	214A8-44151	209	214J8-10561	196
212Y0-82001	215	214A4-12161	94	214A8-44151	217	214J8-10561	202
212Y0-82101	207	214A4-32041	98	214A8-44151	224	214J8-10561	210
212Y0-82101	215	214A4-32041	99	214A8-46001	208	214J8-10561	218
21232-32551	19	214A4-32051	98	214A8-46001	208	214J8-10571	196
21232-32551	21	214A4-32051	99	214A8-52051	98	214J8-10571	202

PARTS NUMBER INDEX

Part No.	Fig.No.	Part No.	Fig.No.	Part No.	Fig.No.	Part No.	Fig.No.
214J8-10571	210	215E4-32341	98	216G2-43531	50	216G6-43561	150
214J8-10571	218	215E4-32341	99	216G2-43542	41	216G6-52161	154
214J8-10581	196	215E4-39801	98	216G2-43542	48	216G6-52291	151
214J8-10581	202	215E4-52231	118	216G2-43542	49	216G6-52291	154
214J8-10581	210	215E8-42171	216	216G2-43542	50	216G6-52291	159
214J8-10581	218	215E8-42171	216	216G2-43551	41	216G6-52291	160
214J8-10591	196	215E8-42181	216	216G2-43551	48	216G6-52291	160
214J8-10591	202	215E8-42181	216	216G2-43551	49	216G7-32021	166
214J8-10591	210	215K0-82701	200	216G2-43551	50	216G7-32021	167
214J8-10591	218	215K0-82701	216	216G2-43562	41	216G7-32021	168
214J8-10601	196	215K0-82701	223	216G2-43562	48	216G7-32021	169
214J8-10601	202	216G0-93101	217	216G2-43562	49	216G7-52051	144
214J8-10601	210	216G0-93101	224	216G2-43562	50	216G7-52201	145
214J8-10601	218	216G0-93151	217	216G2-43571	41	216G8-33351	213
214J8-10611	196	216G1-02451	3	216G2-43571	48	216G8-33351	221
214J8-10611	202	216G1-02461	3	216G2-43571	49	216G8-33361	199
214J8-10611	210	216G1-02471	3	216G2-43571	50	216G8-33361	205
214J8-10611	218	216G1-02481	3	216G2-43582	41	216G8-33361	213
214J8-10621	196	216G1-02491	3	216G2-43582	48	216G8-33361	213
214J8-10621	202	216G1-02501	3	216G2-43582	49	216G8-33361	221
214J8-10621	210	216G2-22051	17	216G2-43582	50	216G8-33361	221
214J8-10621	218	216G2-22051	18	216G2-43592	41	216G8-33371	199
214J8-10631	196	216G2-40602	41	216G2-43592	48	216G8-33371	205
214J8-10631	202	216G2-40602	48	216G2-43592	49	216G8-33371	213
214J8-10631	210	216G2-40602	49	216G2-43592	50	216G8-33371	213
214J8-10631	218	216G2-40602	50	216G2-43602	41	216G8-33371	221
214J8-10641	196	216G2-40701	41	216G2-43602	48	216G8-33371	221
214J8-10641	202	216G2-40711	41	216G2-43602	49	216G8-33401	199
214J8-10641	210	216G2-40721	41	216G2-43602	50	216G8-33401	205
214J8-10641	218	216G2-40731	41	216G2-43611	41	216G8-33401	213
214J8-10651	196	216G2-42071	39	216G2-43611	48	216G8-33401	221
214J8-10651	202	216G2-42311	31	216G2-43611	49	216G8-52301	199
214J8-10651	210	216G2-42311	32	216G2-43611	50	216G8-52301	205
214J8-10651	218	216G2-42311	33	216G2-43622	41	216G8-52301	213
214J8 10661	196	216G2 42311	34	216G2-43622	48	216G8-52301	221
214J8-10661	202	216G2-42321	31	216G2-43622	49	216G8-53001	187
214J8-10661	210	216G2-42321	32	216G2-43622	50	216G8-53011	187
214J8-10661	218	216G2-42321	33	216G2-43631	41	216G9-12052	189
214J8-10671	196	216G2-42321	34	216G2-43631	48	216G9-12062	189
214J8-10671	202	216G2-43111	39	216G2-43631	49	216G9-12071	189
214J8-10671	210	216G2-43111	40	216G2 43631	50	216G9 12071	190
214J8-10671	218	216G2-43401	31	216G2-43651	31	216G9-12071	191
214J8-10681	196	216G2-43401	32	216G2-43651	32	216G9-12071	192
214J8-10681	202	216G2-43401	33	216G2-43651	33	216G9-12071	193
214J8-10681	210	216G2-43401	34	216G2-43651	34	216G9-12071	194
214J8-10681	218	216G2-43411	31	216G2-43711	31	216G9-12131	189
214J8-11002	196	216G2-43411	32	216G2-43711	32	216G9-12131	190
214J8-11002	202	216G2-43411	33	216G2-43711	33	216G9-12131	191
214J8-11002	210	216G2-43411	34	216G2-43711	34	216G9-12131	192
214J8-11002	218	216G2-43421	31	216G4-12101	94	216G9-12131	193
214J8-42721	223	216G2-43421	32	216G4-12111	94	216G9-12131	194
214J8-42721	223	216G2-43421	33	216G5-32201	137	216H3-92171	151
214J8-46001	223	216G2-43421	34	216G5-32331	137	216H3-92171	159
214J8-46001	223	216G2-43502	41	216G5-32341	137	216H3-92171	160
214T0-83501	222	216G2-43502	48	216G5-42011	130	216H3-92171	160
214T0-83511	222	216G2-43502	49	216G6-42451	151	216H3-92281	155
214T0-83521	222	216G2-43502	50	216G6-42481	151	216H3-92281	155
214T0-83531	222	216G2-43531	41	216G6-42541	151	216H3-92281	155
214T0-83541	222	216G2-43531	48	216G6-42921	153	216H3-92281	155
214T8-43011	222	216G2-43531	49	216G6-42931	153	216H5-42141	151

PARTS NUMBER INDEX

Part No.	Fig.No.	Part No.	Fig.No.	Part No.	Fig.No.	Part No.	Fig.No.
216H7-82111	184	22N45-32151	130	22N52-42321	31	22N54-32501	98
216M7-62101	164	22N45-32161	130	22N52-42321	32	22N54-32501	99
217G2-32001	19	22N45-32201	130	22N52-42321	33	22N54-32511	98
217G2-32001	20	22N45-40202	127	22N52-42321	34	22N54-32511	99
217G2-42021	39	22N45-40302	127	22N52-42331	31	22N54-32801	98
217G2-42021	40	22N45-40302	129	22N52-42331	32	22N54-32941	98
217G2-42051	39	22N45-42101	127	22N52-42331	33	22N54-32941	99
217W2-10001	185	22N45-42131	133	22N52-42331	34	22N54-32971	98
22B42-42212	35	22N50-73191	217	22N52-42501	26	22N54-32971	99
22B51-00101	1	22N50-92101	217	22N52-42511	26	22N54-50201	118
22B51-00201	1	22N50-92101	224	22N52-42951	33	22N54-50221	118
22B51-00211	1	22N51-00101	2	22N52-42951	34	22N54-52001	118
22B51-02001	3	22N51-00161	1	22N52-43001	33	22N54-52101	118
22B51-02201	5	22N51-00161	2	22N52-43001	34	22N54-52121	118
22B51-02601	5	22N51-00201	1	22N53-02071	88	22N54-52141	118
22B52-12001	14	22N51-00201	2	22N53-02151	87	22N54-52151	118
22B52-12011	14	22N51-00211	1	22N53-02201	93	22N54-52201	118
22B52-12201	11	22N51-00211	2	22N53-02212	93	22N54-52251	118
22B52-22101	146	22N51-00301	6	22N53-02601	87	22N54-59801	118
22B52-30111	23	22N51-00301	8	22N53-02611	87	22N55-10161	119
22B52-40301	26	22N51-00401	2	22N54-10201	94	22N55-12271	120
22B52-42111	39	22N51-00411	2	22N54-10301	95	22N55-12281	120
22B52-42212	36	22N51-00601	6	22N54-10311	95	22N55-12571	121
22B52-42221	39	22N51-02001	4	22N54-12011	94	22N55-12701	122
22B55-22011	125	22N51-02201	6	22N54-12021	94	22N55-12711	122
22B57-62001	176	22N51-02251	6	22N54-12022	94	22N55-12721	122
22C41-00101	1	22N51-02251	8	22N54-12201	156	22N55-12901	124
22C42-12201	11	22N52-12001	15	22N54-12201	157	22N55-13181	119
22C47-62001	177	22N52-12201	12	22N54-12201	158	22N55-13181	150
22C47-62101	177	22N52-22101	147	22N54-12311	156	22N55-13191	119
22N40-72191	221	22N52-22201	144	22N54-12311	157	22N55-20201	125
22N40-74311	222	22N52-22201	146	22N54-12321	156	22N55-20201	126
22N40-74501	222	22N52-22201	147	22N54-12321	157	22N55-20211	125
22N40-81001	224	22N52-30111	24	22N54-30101	98	22N55-20211	126
22N40-81091	224	22N52-32021	23	22N54-30102	98	22N55-22011	125
22N40-82201	224	22N52-32021	24	22N54-30121	98	22N55-22011	126
22N40-82221	224	22N52-32021	25	22N54-30122	98	22N55-22031	125
22N40-82251	224	22N52-40301	26	22N54-32131	98	22N55-22031	126
22N40-82801	224	22N52-42021	31	22N54-32131	99	22N55-22121	125
22N41-00201	1	22N52-42021	32	22N54-32151	98	22N55-22121	126
22N41-00201	2	22N52-42021	33	22N54-32151	99	22N55-22131	125
22N42-42201	27	22N52-42021	34	22N54-32181	98	22N55-22131	126
22N42-42212	37	22N52-42031	33	22N54-32181	99	22N55-22201	126
22N43-90201	61	22N52-42031	34	22N54-32201	98	22N55-40202	128
22N43-90211	61	22N52-42101	31	22N54-32211	98	22N55-40302	128
22N43-90301	61	22N52-42101	32	22N54-32221	98	22N55-40402	128
22N43-90511	61	22N52-42101	33	22N54-32231	98	22N55-42101	128
22N43-92201	61	22N52-42101	34	22N54-32241	98	22N55-42141	130
22N43-92301	61	22N52-42111	39	22N54-32311	100	22N55-42141	131
22N43-92701	61	22N52-42111	40	22N54-32321	100	22N55-42141	132
22N43-92711	61	22N52-42201	28	22N54-32351	98	22N55-42171	133
22N43-92731	61	22N52-42212	38	22N54-32351	99	22N55-42171	134
22N43-92901	61	22N52-42221	40	22N54-32361	98	22N55-42171	135
22N43-92911	61	22N52-42251	42	22N54-32361	99	22N55-42601	128
22N43-93001	61	22N52-42301	39	22N54-32401	98	22N55-50101	142
22N43-93011	61	22N52-42301	40	22N54-32401	99	22N56-32041	148
22N43-93021	61	22N52-42311	31	22N54-32402	98	22N56-40101	150
22N43-93031	61	22N52-42311	32	22N54-32402	99	22N56-40202	151
22N45-30303	127	22N52-42311	33	22N54-32481	98	22N56-40252	159
22N45-32101	133	22N52-42311	34	22N54-32481	99	22N56-40262	159

PARTS NUMBER INDEX

Part No.	Fig.No.	Part No.	Fig.No.	Part No.	Fig.No.	Part No.	Fig.No.
22N56-40272	159	22N56-43421	161	22N57-42001	174	22N58-43011	208
22N56-40272	160	22N56-43431	161	22N57-42101	171	22N58-43011	223
22N56-40272	160	22N56-43531	151	22N57-42101	172	22N58-45001	201
22N56-40302	152	22N56-43531	152	22N57-42101	173	22N58-45001	217
22N56-40361	151	22N56-43541	151	22N57-42101	174	22N58-45001	224
22N56-40371	152	22N56-43771	161	22N57-42121	171	22N58-50101	186
22N56-40401	152	22N56-43801	161	22N57-42121	172	22N58-50111	186
22N56-40411	159	22N56-43831	161	22N57-42121	173	22N58-50121	186
22N56-40421	159	22N56-43871	161	22N57-42121	174	22N58-50131	186
22N56-40451	151	22N56-43881	161	22N57-42151	171	22N58-50141	186
22N56-40461	151	22N56-43911	161	22N57-42151	172	22N58-50201	186
22N56-40471	151	22N56-43921	161	22N57-42151	173	22N58-50211	186
22N56-42041	150	22N56-43931	161	22N57-42151	174	22N58-50221	186
22N56-42602	153	22N56-50201	154	22N57-42161	171	22N58-50231	186
22N56-42612	153	22N56-50211	154	22N57-42161	172	22N58-50241	186
22N56-42701	156	22N56-52201	154	22N57-42161	173	22N58-50301	187
22N56-42701	157	22N56-52222	154	22N57-42201	166	22N58-50311	187
22N56-42701	158	22N56-52231	154	22N57-42201	167	22N58-50311	187
22N56-42711	161	22N56-52241	154	22N57-42201	168	22N58-50311	187
22N56-42721	161	22N56-52251	154	22N57-42201	169	22N58-50311	187
22N56-42731	156	22N56-52302	155	22N57-42211	166	22N58-52101	186
22N56-42731	157	22N56-52311	155	22N57-42211	167	22N58-52111	186
22N56-42731	158	22N56-52321	155	22N57-42211	168	22N58-52121	186
22N56-42741	156	22N56-52351	154	22N57-42211	169	22N58-52301	186
22N56-42741	157	22N56-52351	154	22N57-52101	145	22N58-52801	186
22N56-42741	158	22N56-52361	154	22N57-52102	145	22N58-52811	186
22N56-42751	156	22N56-52402	154	22N57-52302	144	22N58-52821	186
22N56-42751	157	22N57-30221	166	22N57-62001	178	22N58-52831	186
22N56-42751	158	22N57-30231	167	22N57-62101	176	22N58-52841	186
22N56-42761	161	22N57-30241	168	22N57-62101	177	22N58-52851	186
22N56-42771	157	22N57-30251	169	22N57-62101	178	22N58-52861	186
22N56-42771	158	22N57-30321	166	22N57-62101	179	22N58-52871	186
22N56-42791	156	22N57-30321	166	22N57-62201	176	22N58-52901	186
22N56-42791	157	22N57-30331	167	22N57-62201	177	22N58-52911	186
22N56 42791	158	22N57 30331	167	22N57-62201	178	22N58-52921	186
22N56-42811	161	22N57-30341	168	22N57-62201	179	22N58-52931	186
22N56-42811	161	22N57-30341	168	22N57-62221	183	22N58-52941	186
22N56-42851	161	22N57-30351	169	22N57-62401	183	22N58-53001	187
22N56-42861	156	22N57-30351	169	22N57-62451	183	22N58-53101	187
22N56-42861	157	22N57-32041	166	22N57-62531	183	22N58-53101	187
22N56-42861	158	22N57-32041	167	22N57 62801	180	22N59 12041	188
22N56-42901	155	22N57-32041	168	22N57-63001	176	22N59-12051	188
22N56-42911	155	22N57-32041	169	22N57-63001	178	22N59-12061	188
22N56-43021	161	22N57-40011	171	22N57-63011	170	22N59-12101	188
22N56-43021	161	22N57-40011	172	22N57-80201	184	22N59-12111	188
22N56-43021	161	22N57-40011	173	22N57-82001	184	22N59-12261	189
22N56-43021	161	22N57-40011	174	22N57-82101	184	22N59-12351	189
22N56-43031	161	22N57-40021	171	22N57-82111	184	22N80-50201	222
22N56-43041	151	22N57-40021	172	22N58-32701	197	22N80-50221	222
22N56-43051	151	22N57-40021	173	22N58-32701	203	22N80-50231	222
22N56-43221	151	22N57-40021	174	22N58-32701	211	22N80-50261	222
22N56-43251	159	22N57-40031	172	22N58-32701	219	22N80-50401	222
22N56-43251	160	22N57-40031	173	22N58-32711	197	22N80-50421	222
22N56-43251	160	22N57-40031	174	22N58-32711	203	22N80-50431	222
22N56-43271	151	22N57-40041	173	22N58-32711	211	22N80-50461	222
22N56-43281	151	22N57-40041	174	22N58-32711	219	22N80-50601	222
22N56-43411	161	22N57-40051	174	22N58-34501	199	22N80-50621	222
22N56-43421	161	22N57-42001	171	22N58-34601	199	22N80-50631	222
22N56-43421	161	22N57-42001	172	22N58-43011	200	22N80-50661	222
22N56-43421	161	22N57-42001	173	22N58-43011	208	22N80-52601	222

PARTS NUMBER INDEX

Part No.	Fig.No.	Part No.	Fig.No.	Part No.	Fig.No.	Part No.	Fig.No.
22N80-70201	221	22N90-50511	207	22N95-42302	134	22N98-40241	200
22N80-70231	221	22N90-50521	207	22N95-42402	134	22N98-40251	200
22N80-70241	221	22N90-50531	207	22N96-12201	102	22N98-40261	200
22N80-70251	221	22N90-60201	203	22N96-12211	102	22N98-40271	200
22N80-70261	221	22N90-70201	213	22N97-62381	180	22N98-40281	200
22N80-70401	221	22N90-70211	213	22N97-62391	180	22N98-40291	200
22N80-70431	221	22N90-70221	213	22N98-10501	196	22N98-40301	200
22N80-70441	221	22N90-70231	213	22N98-10501	202	22N98-40311	200
22N80-70451	221	22N90-70241	213	22N98-10501	210	22N98-40321	200
22N80-70461	221	22N90-70251	213	22N98-10501	218	22N98-40331	200
22N80-70601	221	22N90-70261	213	22N98-10511	196	22N98-40341	200
22N80-70631	221	22N90-70271	213	22N98-10511	202	22N98-40351	200
22N80-70641	221	22N90-70281	213	22N98-10511	210	22N98-40361	200
22N80-70651	221	22N90-70291	213	22N98-10511	218	22N98-40371	200
22N80-70661	221	22N90-70301	213	22N98-20201	197	22N98-40381	200
22N80-80261	222	22N90-70401	213	22N98-22001	212	22N99-12151	188
22N80-80461	222	22N90-70411	213	22N98-22111	212	22N99-12161	188
22N80-80661	222	22N90-70421	213	22N98-22121	212	22N99-12171	188
22N80-90201	219	22N90-70431	213	22N98-30201	199	22N99-12181	188
22N85-42301	133	22N90-70441	213	22N98-30211	199	22N99-12281	188
22N85-42301	135	22N90-70451	213	22N98-30221	199	22N99-12601	188
22N85-42401	133	22N90-70461	213	22N98-30231	199	22P41-00101	2
22N85-42401	135	22N90-70471	213	22N98-30241	199	22P41-00401	2
22N90-40201	205	22N90-70481	213	22N98-30251	199	22P42-12201	12
22N90-40211	205	22N90-70491	213	22N98-30261	199	22P45-30151	132
22N90-40221	205	22N90-70501	213	22N98-30271	199	22P45-30302	129
22N90-40231	205	22N90-70601	213	22N98-30281	199	22P45-40201	129
22N90-40241	205	22N90-70611	213	22N98-30291	199	22P45-42101	129
22N90-40251	205	22N90-70621	213	22N98-30301	199	22P45-42201	132
22N90-40261	205	22N90-70631	213	22N98-30311	199	22P46-40021	151
22N90-40271	205	22N90-70641	213	22N98-30321	199	22P47-60101	185
22N90-40281	205	22N90-70651	213	22N98-30331	199	22P47-60111	185
22N90-40291	205	22N90-70661	213	22N98-30341	199	22P47-62001	179
22N90-40301	205	22N90-70671	213	22N98-30351	199	22S52-42221	39
22N90 40311	205	22N90 70681	213	22N98-30361	199	22018-30121	197
22N90-40321	205	22N90-70691	213	22N98-30371	199	22018-30121	203
22N90-40331	205	22N90-70701	213	22N98-30381	199	22018-30121	211
22N90-40341	205	22N90-81601	216	22N98-30401	199	22018-30121	219
22N90-40351	205	22N90-81611	216	22N98-30411	199	22018-30261	197
22N90-40361	205	22N90-81621	216	22N98-30421	199	22018-30261	203
22N90-40371	205	22N90-81631	216	22N98 30431	199	22018 30261	211
22N90-40381	205	22N90-81641	216	22N98-30441	199	22018-30261	219
22N90-40401	205	22N90-81651	216	22N98-30451	199	221A2-42031	56
22N90-40411	205	22N90-81661	216	22N98-30461	199	22132-40041	44
22N90-40421	205	22N90-81671	216	22N98-30471	199	22132-40041	45
22N90-40431	205	22N90-81681	216	22N98-30481	199	22132-40041	45
22N90-40441	205	22N90-81691	216	22N98-30491	199	22132-40041	46
22N90-40451	205	22N90-81701	216	22N98-30501	199	22132-40202	44
22N90-40461	205	22N90-90101	211	22N98-30511	199	22132-40202	45
22N90-40471	205	22N90-90152	217	22N98-30521	199	22132-40202	45
22N90-40481	205	22N90-90161	217	22N98-30531	199	22132-40202	46
22N90-40491	205	22N92-30101	19	22N98-30541	199	22192-22091	17
22N90-40501	205	22N92-32001	24	22N98-30551	199	22192-22091	18
22N90-40511	205	22N92-32001	25	22N98-30561	199	22192-42411	44
22N90-40521	205	22N93-00302	87	22N98-30571	199	22192-42411	45
22N90-40531	205	22N93-00602	87	22N98-30581	199	22192-42411	45
22N90-40541	205	22N93-00612	87	22N98-40201	200	22192-42411	46
22N90-40551	205	22N93-02001	88	22N98-40211	200	22193-03001	87
22N90-40561	205	22N93-70101	93	22N98-40221	200	22197-52091	70
22N90-40571	205	22N93-70201	93	22N98-40231	200	22199-12401	62

PARTS NUMBER INDEX

Part No.	Fig.No.	Part No.	Fig.No.	Part No.	Fig.No.	Part No.	Fig.No.
22199-12401	98	22256-42001	45	22438-45731	222	22517-40051	172
22199-12401	98	22256-42001	46	22438-45731	222	22517-40051	173
22199-12401	99	22256-42001	47	22438-45751	200	22517-40051	174
22199-12401	99	22256-42001	151	22438-45771	223	22517-40051	200
22199-12401	100	224G5-42061	130	22438-45791	200	22517-40051	216
22199-12401	118	224G5-42061	131	22438-45791	216	22655-42591	131
22199-12401	127	224G5-42061	132	22438-45811	200	22655-42591	132
22199-12401	128	224T8-42701	222	22438-45811	207	22658-52301	118
22199-12401	129	224T8-42711	222	22438-45811	215	22658-52301	222
22199-12401	186	224T8-46001	222	22438-45831	216	22679-43831	208
22199-12401	186	224T8-46011	222	22438-45831	223	22679-43831	223
22199-22001	195	224T8-52291	222	22438-45851	200	22717-40081	200
22199-22001	195	224T8-53021	187	22438-45851	207	22717-40081	216
22199-22251	195	224W5-30202	132	22438-45871	200	228F2-42131	31
22199-22251	195	224W5-30202	138	22438-45871	223	228F2-42131	32
22199-22261	195	224W5-32401	138	22438-45891	200	229F0-94101	217
22199-22261	195	224W5-32421	138	22438-45891	200	229F0-94101	224
222A2-10211	9	224W5-32441	138	22438-45891	215	229F2-22071	146
222A2-10211	10	224W5-32451	138	22438-45891	216	229F2-22071	147
222A2-22061	146	224W5-32461	138	22438-45891	216	229F2-22151	144
222A2-22061	147	224W5-32471	138	22438-45911	207	229F2-22151	146
222A2-42031	156	224W5-32481	138	22438-45931	223	229F2-22151	147
222A2-42031	157	224W5-32491	138	22438-45931	223	229F2-22171	146
222A2-42031	158	224W5-32501	138	22438-45951	207	229F2-22171	147
222A2-42511	44	224W5-32511	138	22438-45971	200	229F6-42201	21
222A2-42511	45	224W5-32521	138	22438-45971	216	229G0-52251	222
222A2-42511	45	224W5-32551	138	22438-45991	215	229G7-82001	185
222A2-42511	46	224W5-42401	138	22438-46011	200	229G7-82051	182
222A6-42381	56	224W5-42431	138	22438-46011	207	229G7-82051	185
222A6-42451	152	224W7-60311	132	22438-46051	215	229G7-82101	185
222A6-42461	152	22438-45431	207	22438-46051	216	229L0-51201	208
222A9-32011	124	22438-45471	215	22438-46071	200	229L0-51211	208
222Q9-12011	188	22438-45491	207	22438-46111	200	229L0-51221	208
22208-40031	207	22438-45511	207	22438-46131	207	229L0-51231	208
22208-40031	215	22438-45531	215	22438-46151	200	229L0-51241	208
22208-40031	216	22438-45551	200	22438-46151	216	229L0-51251	208
22214-30321	98	22438-45551	207	22438-46211	216	229L0-51261	208
22214-30321	99	22438-45571	207	22438-46231	207	229L0-51271	208
22218-40191	200	22438-45571	215	22438-46271	200	229L0-51281	208
22218-40191	207	22438-45571	222	22438-46371	200	229L0-51291	208
22218-40191	215	22438-45591	200	22439-44031	103	229L0-51301	208
22218-40191	216	22438-45591	207	22439-44031	104	229L0-51311	208
22218-40191	222	22438-45631	207	22439-44031	110	229L0-51321	208
22218-40191	223	22438-45631	215	22439-44031	110	229L0-51331	208
22218-42111	207	22438-45631	216	225A7-62021	164	229L0-51341	208
22218-42111	215	22438-45631	222	225R2-42001	39	229L0-51351	208
22218-42111	216	22438-45651	200	225R6-32001	149	229L0-51361	208
22252-32241	19	22438-45651	207	225R6-42031	61	229L0-51371	208
22252-32241	21	22438-45671	215	225R6-42031	156	229L0-51381	208
22252-32241	23	22438-45671	222	225R6-42031	157	230C2-42201	36
22252-32241	24	22438-45691	200	225R6-42031	158	230C2-42201	38
22252-32241	25	22438-45691	200	225R9-12001	190	230C2-42201	83
22252-32251	13	22438-45691	207	225R9-12052	190	230C2-42201	83
22252-32251	19	22438-45691	216	225R9-12071	190	230C2-42201	84
22252-32251	21	22438-45731	207	225R9-12081	190	230C2-42201	85
22252-32251	23	22438-45731	207	225R9-12091	190	230C2-42201	85
22252-32251	24	22438-45731	207	225R9-12101	149	230C2-42201	86
22256-42001	11	22438-45731	215	225R9-12112	190	230C2-42301	40
22256-42001	44	22438-45731	215	225R9-12142	188	23019-20011	195
22256-42001	45	22438-45731	216	22517-40051	171	23019-20011	195

PARTS NUMBER INDEX

Part No.	Fig.No.	Part No.	Fig.No.	Part No.	Fig.No.	Part No.	Fig.No.
231A0-82001	207	234A8-42561	216	234F8-10581	196	234H7-60301	177
231A0-82001	215	234A8-42571	208	234F8-10581	202	234H7-60301	179
232A8-42201	208	234A8-42571	208	234F8-10581	210	234H7-62171	185
232A8-42201	208	234A8-42571	216	234F8-10581	218	234H7-62301	165
232A8-42201	216	234A8-42571	216	234F8-10591	196	234H7-62351	165
232A8-42201	216	234A8-42602	201	234F8-10591	202	23451-02011	23
232L8-42601	223	234A8-42602	209	234F8-10591	210	23451-02011	24
232L8-42601	223	234A8-42602	217	234F8-10591	218	23451-02011	25
232L8-42621	223	234A8-42602	224	234F8-10601	196	23452-42181	39
232L8-42621	223	234A8-42611	201	234F8-10601	202	23452-42181	40
232L8-42631	223	234A8-42611	209	234F8-10601	210	23453-02071	88
232L8-42631	223	234A8-42611	217	234F8-10601	218	23453-02091	88
232L8-49801	223	234A8-42611	224	234F8-10611	196	23453-02131	88
232L8-49801	223	234A8-42622	201	234F8-10611	202	23457-42041	172
232W9-12001	190	234A8-42622	209	234F8-10611	210	23457-42041	173
232W9-12011	190	234A8-42622	217	234F8-10611	218	23460-53161	222
232W9-12021	190	234A8-42622	224	234F8-10621	196	23460-53171	118
232W9-12051	190	234A8-43501	200	234F8-10621	202	23460-53181	222
232W9-12101	190	234A8-43501	207	234F8-10621	210	23467-82041	185
232W9-12111	190	234A8-43501	215	234F8-10621	218	236L2-10102	10
23232-42072	35	234A8-43501	216	234F8-10631	196	23647-40041	171
23232-42072	36	234A8-43501	223	234F8-10631	202	23652-12051	13
23232-42072	37	234F0-52501	208	234F8-10631	210	23652-12051	19
23232-42072	38	234F0-52501	208	234F8-10631	218	23652-12051	21
23235-40091	136	234F0-59801	208	234F8-10641	196	23652-12051	63
234A0-52611	208	234F0-59801	208	234F8-10641	202	23652-22121	6
234A0-52611	208	234F4-40302	111	234F8-10641	210	23652-22121	8
234A0-62051	209	234F4-40302	113	234F8-10641	218	23652-44001	76
234A0-62111	209	234F8-10501	196	234F8-10651	196	23654-32041	98
234A1-00101	4	234F8-10501	202	234F8-10651	202	23654-32041	99
234A1-00111	4	234F8-10501	210	234F8-10651	210	23654-32161	98
234A1-00121	4	234F8-10501	218	234F8-10651	218	23654-32161	99
234A1-02001	8	234F8-10511	196	234F8-10661	196	23654-34051	101
234A2-12201	9	234F8-10511	202	234F8-10661	202	23655-22101	125
234A2-12201	10	234F8-10511	210	234F8-10661	210	23655-22101	126
234A2-12211	9	234F8-10511	218	234F8-10661	218	23655-22101	151
234A2-12211	10	234F8-10521	196	234F8-10671	196	23655-42421	127
234A2-42301	55	234F8-10521	202	234F8-10671	202	23655-42421	127
234A6-43121	152	234F8-10521	210	234F8-10671	210	23655-42421	128
234A8-02201	201	234F8-10521	218	234F8-10671	218	23655-42421	128
234A8-40611	208	234F8-10531	196	234F8-10681	196	23655-42421	129
234A8-40611	208	234F8-10531	202	234F8-10681	202	23655-42421	129
234A8-40701	201	234F8-10531	210	234F8-10681	210	23656-42601	69
234A8-40701	209	234F8-10531	218	234F8-10681	218	23657-42131	172
234A8-40701	217	234F8-10541	196	234F8-12101	196	23657-60311	177
234A8-40701	224	234F8-10541	202	234F8-12101	202	23657-60311	179
234A8-41001	224	234F8-10541	210	234F8-12101	210	23658-42531	216
234A8-41101	201	234F8-10541	218	234F8-12101	218	23658-52101	186
234A8-41101	209	234F8-10551	196	234F8-22101	204	23658-52101	186
234A8-42511	208	234F8-10551	202	234F8-22101	212	23658-52401	186
234A8-42511	208	234F8-10551	210	234F8-22111	204	23658-52401	186
234A8-42551	200	234F8-10551	218	234F8-22111	212	23659-12101	190
234A8-42551	208	234F8-10561	196	234F8-22121	204	23659-12101	191
234A8-42551	208	234F8-10561	202	234F8-22121	212	23659-12101	192
234A8-42551	216	234F8-10561	210	234F8-22201	198	23659-12101	193
234A8-42551	216	234F8-10561	218	234F8-22201	204	23659-12101	194
234A8-42551	223	234F8-10571	196	234F8-22201	220	23678-06002	199
234A8-42561	208	234F8-10571	202	234F8-41001	201	23678-06002	205
234A8-42561	208	234F8-10571	210	234F8-41001	209	23678-06002	213
234A8-42561	216	234F8-10571	218	234F8-41001	217	23678-06002	221

PARTS NUMBER INDEX

Part No.	Fig.No.	Part No.	Fig.No.	Part No.	Fig.No.	Part No.	Fig.No.
23678-42301	208	242F2-42321	34	24235-42091	136	246B2-43221	85
23678-42301	208	242F6-80101	162	24237-62331	97	246B2-43221	85
23679-45051	57	242F6-80201	163	243C6-40021	151	246B2-43221	86
237A2-10102	9	242F6-82001	162	243C6-42821	159	24629-44201	222
237H2-10102	9	242F6-82001	163	243C6-42821	159	247C2-43301	83
23772-12071	9	242F6-82011	162	243C7-80201	97	247C2-43301	83
23772-12071	10	242F6-82011	163	24320-52001	208	247C2-43301	84
23775-42101	131	242F6-82021	162	24320-55001	222	247C2-43301	85
23775-42101	132	242F6-82031	162	24329-45541	65	247C2-43301	85
238A2-42151	40	242F6-82031	163	24329-45541	67	247C2-43301	86
238F9-12071	189	242F6-82041	162	24329-45541	69	247C2-43501	84
23813-00071	101	242F6-82041	163	24329-45541	222	247C2-43501	86
23813-00081	101	242F6-82051	162	24329-46201	201	247C2-43601	83
23819-20011	195	242F6-82051	163	24329-46201	217	247C2-43601	83
23819-20011	195	242F6-82061	162	24329-46201	224	247C2-43601	84
23819-20021	195	242F6-82071	162	24329-46201	224	247C2-43601	85
23819-20021	195	242F6-82071	163	24352-42521	31	247C2-43601	85
23870-52871	170	242F6-82081	162	24352-42521	32	247C2-43601	86
239A2-12021	13	242F6-82091	162	24352-42521	33	24868-42111	200
239A2-40501	29	242F6-82101	162	24352-42521	34	24868-42111	216
239A2-42221	41	242F6-82101	163	24450-52571	208	24868-42111	216
239A2-42221	41	242F6-82111	162	24450-52571	208	251A2-22001	18
239A4-12402	94	242F6-82111	163	24450-52571	208	25303-02102	88
239A4-12411	94	242F6-82121	162	24450-52571	208	25369-47031	56
239A4-12431	94	242F6-82121	163	24450-92021	204	25492-22001	18
239A4-12441	94	242F6-82131	162	24450-92021	212	25592-42081	39
239A4-12541	156	242F6-82141	162	24453-02061	88	25592-42081	40
239A4-12541	158	242F6-82151	162	24453-02102	88	25592-42121	146
239A5-40501	130	242F6-82151	163	24454-32232	98	25592-42121	147
239A5-40501	137	242F6-82161	162	24454-32232	99	25595-42411	139
239A5-42301	136	242F6-82161	163	24454-40201	103	25595-42421	139
239A5-42471	133	242F6-82171	162	24454-40201	104	25595-42452	137
239A5-42471	135	242F6-82171	163	24454-40201	110	25595-42452	139
239A9-12301	189	242F6-82181	162	24454-40211	103	25595-42452	140
239A9 12501	189	242F6 82181	163	24454-40211	104	25595-42482	139
239A9-92001	124	242F6-82191	162	24454-40211	110	25595-42491	130
239A9-92001	124	242F6-82191	163	24454-40211	110	25595-42491	131
239H7-60201	165	242F6-82201	162	24454-40221	103	25595-42491	132
239T9-12071	190	242F6-82211	162	24454-40221	104	25595-42501	139
23913-02041	101	242F6-82221	162	24454-40221	110	25599-22051	195
23917-42191	208	242F6-82231	162	24459 42291	223	25599 22051	195
23917-42191	223	242F6-82241	162	24459-42291	223	25599-22061	195
23918-52161	208	242F6-82241	162	24459-42381	207	25599-22061	195
23918-52161	208	242F6-82241	163	24459-42381	215	25599-32001	151
23918-52171	208	242F6-82251	162	24459-42381	222	25599-32021	151
23918-52171	208	242F6-82261	162	24459-42391	200	256A1-08031	4
240A5-42411	133	242F6-82261	163	24459-42391	207	256A2-12031	13
240A5-42411	135	242F6-82271	162	24459-42391	215	256A2-12041	13
242F1-02111	6	242F6-82281	162	24459-42391	216	256C1-08011	3
242F1-02111	8	242F6-82291	162	24459-42391	222	256C2-42231	39
242F1-02121	6	242F6-82291	163	24459-42391	223	256C2-42231	40
242F1-02121	8	242F6-82301	162	24459-42951	201	256C5-12631	56
242F2-12051	15	242F6-82311	162	24459-42951	209	256C6-32011	1
242F2-42151	40	242F6-82321	162	24459-42951	217	256C6-32011	2
242F2-42151	40	242F6-82331	162	24459-42951	224	256C9-52372	1
242F2-42301	33	242F6-82341	163	24499-22011	195	256C9-52372	2
242F2-42301	34	242F6-82351	163	24499-22011	195	256G1-08011	4
242F2-42311	33	242F6-82361	163	246B2-43221	83	256G1-08021	4
242F2-42311	34	242F6-82371	163	246B2-43221	83	256T2-42121	156
242F2-42321	33	242S2-52001	60	246B2-43221	84	256T2-42121	157

PARTS NUMBER INDEX

Part No.	Fig.No.	Part No.	Fig.No.	Part No.	Fig.No.	Part No.	Fig.No.
256T2-42121	158	27682-62131	85	277P8-32701	205	277T0-51601	208
25785-43091	130	27682-62131	86	277P8-32701	213	277T0-51611	208
25786-32031	148	277H7-60601	170	277P8-32701	221	277T0-51621	208
25786-32031	149	277N0-82021	201	277T0-51001	208	277T0-51631	208
25790-94021	217	277N0-82021	209	277T0-51011	208	277T0-51641	208
25790-94021	224	277N0-82021	217	277T0-51021	208	277T0-51651	208
26062-42881	33	277P0-83001	222	277T0-51031	208	277T0-51661	208
26062-42881	34	277P8-22051	197	277T0-51041	208	277T0-51671	208
26062-42881	52	277P8-22051	199	277T0-51051	208	277T0-51681	208
26062-42881	54	277P8-22051	199	277T0-51061	208	277T0-51691	208
26062-42881	79	277P8-22051	203	277T0-51071	208	277T0-51701	208
26062-42881	80	277P8-22051	205	277T0-51081	208	277T0-51711	208
26062-42881	81	277P8-22051	205	277T0-51091	208	277T0-51721	208
26062-42881	82	277P8-22051	211	277T0-51101	208	277T0-51731	208
26519-12281	189	277P8-22051	213	277T0-51111	208	277T0-51741	208
26602-42041	98	277P8-22051	213	277T0-51121	208	277T0-51751	208
26602-42081	18	277P8-22051	213	277T0-51131	208	277T0-51761	208
26602-42101	217	277P8-22051	219	277T0-51141	208	277T0-51771	208
26602-42221	180	277P8-22051	221	277T0-51151	208	277T0-51781	208
26602-42221	180	277P8-22051	221	277T0-51161	208	277T0-60301	209
27042-42312	78	277P8-22051	221	277T0-51171	208	277T0-60311	209
27042-42322	184	277P8-22061	197	277T0-51181	208	277T0-60321	209
27042-64311	78	277P8-22061	199	277T0-51201	208	277T0-60331	209
27045-40302	130	277P8-22061	203	277T0-51211	208	277T0-60341	209
27045-40302	131	277P8-22061	205	277T0-51221	208	277T0-60351	209
27045-40302	132	277P8-22061	211	277T0-51231	208	277T0-60361	209
27045-40302	139	277P8-22061	213	277T0-51241	208	277T0-60371	209
27045-42371	131	277P8-22061	213	277T0-51251	208	277T0-60381	209
27049-12172	188	277P8-22061	219	277T0-51261	208	277T0-60391	209
271A7-52301	144	277P8-22061	221	277T0-51271	208	277T0-60401	209
271A9-12251	189	277P8-22061	221	277T0-51281	208	277T0-60411	209
272E5-42402	132	277P8-22071	197	277T0-51291	208	277T0-60421	209
272K8-52201	199	277P8-22071	199	277T0-51301	208	277T0-60431	209
272K8-52201	205	277P8-22071	199	277T0-51311	208	277T0-60441	209
272K8-52201	213	277P8-22071	203	277T0-51321	208	277T0-60451	209
272K8-52201	221	277P8-22071	205	277T0-51331	208	277T0-60461	209
273A6-42471	21	277P8-22071	205	277T0-51341	208	277T0-60471	209
273A6-42471	154	277P8-22071	211	277T0-51351	208	277T0-60481	209
273A9-12242	188	277P8-22071	213	277T0-51361	208	277T0-62051	209
27397-52101	65	277P8-22071	213	277T0-51371	208	277T0-62071	209
27419-12061	190	277P8-22071	213	277T0-51381	208	277T0-81002	223
27419-12061	191	277P8-22071	219	277T0-51401	208	277T0-81032	223
27419-12061	192	277P8-22071	221	277T0-51411	208	277T0-81042	223
27419-12061	193	277P8-22071	221	277T0-51421	208	277T0-81052	223
27419-12061	194	277P8-22071	221	277T0-51431	208	277T0-81062	223
27419-12062	189	277P8-22081	197	277T0-51441	208	277T0-81202	223
27419-12062	190	277P8-22081	199	277T0-51451	208	277T0-81232	223
27419-12071	190	277P8-22081	199	277T0-51461	208	277T0-81242	223
27419-12071	191	277P8-22081	203	277T0-51471	208	277T0-81252	223
27419-12071	192	277P8-22081	205	277T0-51481	208	277T0-81262	223
27419-12071	193	277P8-22081	205	277T0-51491	208	277T0-81401	223
27419-12071	194	277P8-22081	211	277T0-51501	208	277T0-81401	223
27419-12072	189	277P8-22081	213	277T0-51511	208	277T0-81431	223
27419-12072	190	277P8-22081	213	277T0-51521	208	277T0-81431	223
27662-62721	119	277P8-22081	213	277T0-51531	208	277T0-81441	223
27662-63711	121	277P8-22081	219	277T0-51541	208	277T0-81441	223
27682-62131	83	277P8-22081	221	277T0-51551	208	277T0-81451	223
27682-62131	83	277P8-22081	221	277T0-51561	208	277T0-81451	223
27682-62131	84	277P8-22081	221	277T0-51571	208	277T0-81461	223
27682-62131	85	277P8-32701	199	277T0-51581	208	277T0-81461	223

PARTS NUMBER INDEX

Part No.	Fig.No.	Part No.	Fig.No.	Part No.	Fig.No.	Part No.	Fig.No.
277T0-81602	223	29590-64501	9	509P5-92071	21	514A3-72062	99
277T0-81632	223	29590-64501	10	509P5-92081	21	514A3-72091	42
277T0-81642	223	3956323	74	509P5-92091	21	514A3-72101	101
277T0-81652	223	509K2-30101	30	509P5-92101	21	514A3-72211	98
277T0-81662	223	509K2-82251	190	509P5-92111	21	514A3-72211	99
277T0-81802	223	509K2-82251	191	509P5-92121	21	514A3-82002	190
277T0-81832	223	509K2-82251	192	509P5-92181	21	514A3-82002	191
277T0-81842	223	509K2-82251	193	509P5-92201	21	514A3-82002	192
277T0-81852	223	509K2-82251	194	509P5-92211	21	514A3-82002	193
277T0-81862	223	509K3-82681	190	509P5-92231	21	514A3-82002	194
27717-52081	185	509K3-82681	191	509P5-92241	21	514A3-82012	190
27732-42221	121	509K3-82681	192	509P5-92481	22	514A3-82012	192
27732-42311	56	509K3-82681	193	509P5-92491	21	514A3-82022	190
27732-42311	71	509K3-82681	194	509P5-92511	21	514A3-82022	192
27732-42311	72	509K3-82801	192	509P5-92521	21	514A3-82032	192
278M2-42061	142	509K3-82811	190	509P5-92531	21	514A3-82042	192
278M2-42061	142	509K3-82811	192	509P5-92541	21	514A3-82042	194
278M2-42061	142	509K3-82821	190	509P9-90101	47	514A3-82052	192
278M2-42061	142	509K3-82821	192	509P9-90101	47	514A3-82062	192
278M6-42031	155	509K3-82831	192	509S3-92261	56	514A3-82072	192
278M6-42031	155	509K3-82841	192	509S3-92261	56	514A3-82081	192
278M6-42031	155	509K3-82841	194	509S3-92261	155	514A3-82301	188
278M6-42031	155	509K3-82851	192	509S3-92261	155	514A3-82301	188
278M6-42031	155	509K3-82861	192	509S3-92261	155	514A3-82301	211
278M6-42031	155	509K3-82871	192	509S3-92261	155	514A3-82321	188
27912-62441	142	509K3-82881	194	509S5-92241	21	514A3-82321	211
27912-62441	142	509K3-82891	194	51232-82001	190	514A3-82331	188
27970-53141	208	509K3-83001	192	51232-82001	191	514A3-82331	211
27970-53141	208	509K3-83011	190	51232-82001	192	514A3-82341	188
27978-42371	223	509K3-83011	192	51232-82001	193	514A3-82341	211
27978-42371	223	509K3-83021	190	51232-82001	194	514A3-82351	188
27978-42371	223	509K3-83021	192	51232-82011	190	514A3-82351	211
27978-42371	223	509K3-83031	192	51232-82011	192	514A3-82361	188
27978-42411	223	509K3-83041	192	51232-82021	190	514A3-82361	211
27978-42411	223	509K3-83041	194	51232-82021	192	514A3-82371	188
27978-42421	223	509K3-83051	192	51232-82032	190	514A3-82371	211
27978-42421	223	509K3-83061	192	51233-02011	192	514A3-82381	188
27978-42601	222	509K3-83071	192	51233-02021	192	514A3-82381	211
27979-43101	201	509K3-83081	194	51233-83021	192	514A3-82391	188
27979-43101	209	509K3-83091	194	51233-83221	192	514A3-82391	211
27979-43101	217	509K3-83301	192	51233-83221	194	514A3-82651	192
27979-43101	224	509K3-83311	192	51233-83421	192	514A3-82661	192
27980-82701	223	509K3-83321	192	51233-83621	192	514A3-82671	192
27980-82701	223	509K3-83331	192	51233-83821	192	514A3-82681	192
280C2-42301	30	509K3-83341	192	514A1-41001	53	514A5-12011	119
280C2-42311	30	509K3-83401	192	514A1-41001	80	514A5-12011	119
280C2-42331	29	509K3-83411	192	514A1-41001	81	514A5-12021	120
280C2-42331	30	509K3-83421	192	514A1-41011	53	514A5-12021	121
280C2-42341	30	509K3-83431	192	514A1-41021	53	514A5-12021	123
280C2-42351	29	509K3-83441	192	514A1-41031	53	514A5-32341	72
280C2-42351	30	509K3-83451	190	514A1-42041	72	514J3-72051	101
281E6-42521	156	509K3-83461	190	514A2-42201	118	514J6-82201	112
281E6-42521	157	509P5-90101	21	514A2-72411	175	514J6-82201	114
281E6-42521	158	509P5-92001	21	514A2-72411	175	514J6-82211	112
281E6-42571	156	509P5-92011	21	514A2-72411	175	514J6-82211	114
281E6-42571	157	509P5-92021	21	514A2-82012	190	514J6-82211	116
281E6-42571	158	509P5-92031	21	514A3-02002	192	514J6-82231	116
281E7-42101	175	509P5-92041	21	514A3-72052	98	514T6-82021	107
281E7-62041	183	509P5-92051	21	514A3-72052	99	516G0-60101	3
282M8-32501	208	509P5-92061	21	514A3-72062	98	516G0-62001	4

PARTS NUMBER INDEX

Part No.	Fig.No.	Part No.	Fig.No.	Part No.	Fig.No.	Part No.	Fig.No.
516G0-62011	3	516G3-82581	192	52B91-70101	19	52N52-72201	190
516G1-42111	52	516G3-82591	192	52C46-52101	11	52N52-72201	191
516G1-42111	72	516G3-82801	190	52C47-60201	1	52N52-72201	192
516G1-42211	54	516G3-82801	191	52E00-52121	152	52N52-72201	193
516G1-42211	72	516G3-82801	192	52E00-52191	161	52N52-72201	194
516G2-72051	148	516G3-82801	193	52E00-52201	161	52N52-82401	190
516G2-72701	190	516G3-82801	194	52E00-53051	146	52N52-82411	190
516G2-72701	191	516G3-82811	192	52N42-12001	62	52N52-82501	190
516G2-72701	192	516G3-82821	190	52N43-72001	37	52N52-82511	190
516G2-72701	193	516G3-82821	192	52N43-72101	27	52N52-90201	119
516G2-72701	194	516G3-82831	190	52N50-80201	20	52N53-70101	98
516G2-72711	190	516G3-82831	192	52N50-80211	20	52N53-70102	98
516G2-72711	191	516G3-82841	192	52N50-80221	20	52N53-70121	98
516G2-72711	192	516G3-82851	192	52N50-80301	20	52N53-70122	98
516G2-72711	193	516G3-82851	194	52N50-82001	20	52N53-70201	98
516G2-72711	194	516G3-82861	192	52N50-82011	20	52N53-70202	98
516G2-82051	190	516G3-82871	192	52N50-82021	20	52N53-70301	99
516G2-82061	190	516G3-82881	192	52N50-82021	20	52N53-70302	99
516G3-82001	192	516G3-82891	194	52N50-90101	119	52N53-70321	99
516G3-82011	190	516G3-82901	194	52N50-90201	159	52N53-70322	99
516G3-82011	192	516G3-82911	192	52N50-92202	8	52N53-70401	99
516G3-82021	192	516G3-82921	192	52N51-30201	55	52N53-70402	99
516G3-82031	192	516G3-82931	192	52N51-31001	55	52N53-72001	38
516G3-82031	194	516G3-82941	192	52N51-32001	55	52N53-72101	28
516G3-82041	192	516G3-82951	192	52N51-32011	55	52N53-72201	98
516G3-82051	192	516G3-83601	192	52N51-32101	55	52N53-72201	99
516G3-82061	194	516G3-83611	192	52N51-42101	51	52N53-72211	98
516G3-82071	194	516G3-83621	192	52N51-42101	52	52N53-72211	99
516G3-82081	192	516G3-83631	192	52N51-42111	51	52N53-72301	28
516G3-82091	192	516G3-83701	192	52N51-42111	52	52N53-72401	28
516G3-82101	192	516G3-83711	192	52N51-42121	51	52N53-74001	203
516G3-82111	190	516G3-83721	192	52N51-42121	52	52N53-74001	211
516G3-82111	192	516G3-83731	192	52N51-42151	49	52N53-80101	99
516G3-82121	190	516G5-13051	119	52N51-42151	50	52N53-80102	99
516G3 82121	192	516G5 13151	119	52N51-42161	48	52N53-80121	99
516G3-82131	192	516G6-85011	117	52N51-42161	50	52N53-80122	99
516G3-82141	192	516G6-92001	77	52N51-42301	48	52N53-82001	28
516G3-82141	194	516G6-92011	77	52N51-42301	49	52N53-82101	190
516G3-82151	192	516G6-92022	77	52N51-42301	50	52N53-82101	192
516G3-82161	192	516G6-92031	77	52N51-42401	51	52N53-82111	190
516G3-82171	192	516G6-92151	77	52N51 42401	52	52N53 82111	192
516G3-82181	194	516G7-22001	57	52N51-42411	51	52N53-82121	192
516G3-82191	194	516G9-10101	71	52N51-42411	52	52N53-82131	192
516G3-82201	192	516G9-12011	71	52N51-42511	51	52N53-82141	192
516G3-82211	190	516M5-12301	124	52N51-42511	52	52N53-82141	194
516G3-82211	192	518G0-52531	152	52N51-70301	19	52N53-82151	192
516G3-82221	190	518G0-52541	152	52N52-32001	28	52N53-82161	192
516G3-82221	192	518G2-72121	39	52N52-32401	28	52N53-82171	192
516G3-82232	192	52B43-72001	35	52N52-32501	28	52N53-82181	194
516G3-82241	192	52B50-80211	20	52N52-62001	158	52N53-82191	194
516G3-82241	194	52B50-92201	7	52N52-62011	158	52N53-82201	192
516G3-82251	192	52B50-92251	7	52N52-62101	94	52N53-82211	192
516G3-82261	192	52B53-72001	36	52N52-62201	94	52N53-82221	192
516G3-82271	192	52B54-70101	1	52N52-62301	158	52N53-82231	192
516G3-82281	194	52B56-20101	26	52N52-62401	158	52N53-82241	192
516G3-82291	194	52B56-20101	26	52N52-72101	190	52N53-82301	190
516G3-82521	39	52B56-52001	11	52N52-72101	191	52N53-82301	192
516G3-82551	192	52B57-60201	1	52N52-72101	192	52N53-82311	190
516G3-82561	192	52B57-60251	1	52N52-72101	193	52N53-82311	192
516G3-82571	192	52B57-62201	11	52N52-72101	194	52N53-82321	192

PARTS NUMBER INDEX

Part No.	Fig.No.	Part No.	Fig.No.	Part No.	Fig.No.	Part No.	Fig.No.
52N53-82331	192	52N55-32101	155	52N57-E2001	84	52N58-12511	159
52N53-82341	192	52N55-32111	155	52N57-E2001	85	52N58-22001	72
52N53-82341	194	52N55-32111	155	52N57-E2001	85	52N58-22101	72
52N53-82351	192	52N55-32141	161	52N57-E2001	86	52N58-82001	76
52N53-82361	192	52N55-32141	161	52N57-E2011	83	52N58-82101	76
52N53-82371	192	52N55-32171	152	52N57-E2011	83	52N58-92001	54
52N53-82381	194	52N55-32171	152	52N57-E2011	84	52N58-92021	54
52N53-82391	194	52N55-32211	102	52N57-E2011	85	52N58-92021	80
52N53-82401	192	52N55-32211	102	52N57-E2011	85	52N58-92021	81
52N53-82411	192	52N55-32301	160	52N57-E2011	86	52N58-92041	54
52N53-82421	192	52N55-32301	160	52N57-E2201	83	52N58-92111	52
52N53-82431	192	52N55-32311	160	52N57-E2201	83	52N58-92111	54
52N53-82441	192	52N55-32311	160	52N57-E2201	84	52N58-92201	53
52N53-83201	11	52N55-32331	154	52N57-E2201	85	52N58-92211	53
52N53-83201	12	52N55-32331	154	52N57-E2201	85	52N58-92251	53
52N54-60221	166	52N55-32401	161	52N57-E2201	86	52N59-02001	71
52N54-60231	167	52N55-32401	161	52N57-20201	56	52N59-20411	151
52N54-60241	168	52N55-32411	161	52N57-20211	56	52N59-92021	123
52N54-60251	169	52N55-32411	161	52N57-20221	56	52N59-92031	123
52N55-00101	119	52N55-40081	161	52N57-20301	56	52N59-92051	123
52N55-00101	119	52N55-40211	152	52N57-20311	56	52N59-92051	123
52N55-00111	119	52N55-40411	161	52N57-20521	56	52N59-92101	44
52N55-00111	119	52N55-42251	161	52N57-20521	56	52N59-92101	47
52N55-00121	119	52N55-42251	161	52N57-22231	56	52N59-92121	123
52N55-00121	119	52N55-42301	41	52N57-22241	56	52N59-92161	123
52N55-00131	119	52N55-42601	155	52N57-22341	56	52N59-92201	43
52N55-00131	119	52N55-42611	155	52N57-22351	56	52N59-92201	43
52N55-00141	119	52N55-92131	21	52N57-22351	56	52N59-92201	43
52N55-00501	124	52N55-92261	21	52N57-22381	56	52N59-92501	47
52N55-00501	124	52N55-92321	25	52N57-22381	56	52N59-92501	47
52N55-00511	122	52N55-92381	22	52N57-50101	75	52N91-61201	203
52N55-00511	122	52N55-92401	21	52N57-50301	75	52N91-61211	203
52N55-00511	122	52N55-92441	22	52N57-52001	79	52N91-61301	211
52N55-00521	122	52N55-92451	22	52N57-52001	80	52N91-61311	211
52N55 00521	122	52N55 92471	22	52N57-52001	81	52N91-70101	19
52N55-00521	122	52N55-92601	21	52N57-52031	79	52N91-70201	19
52N55-00551	124	52N55-92631	21	52N57-52031	80	52N93-91901	221
52N55-00551	124	52N55-92671	21	52N57-52031	81	52N93-91931	221
52N55-02451	42	52N56-12051	74	52N57-52051	78	52N93-91941	221
52N55-02451	42	52N56-20101	26	52N57-52061	78	52N93-91951	221
52N55-12001	123	52N56-20101	26	52N57 52101	78	52N93 91961	221
52N55-12011	123	52N56-22011	82	52N57-52111	78	52N95-92341	25
52N55-12101	120	52N56-22021	82	52N57-52151	78	52N97-42001	102
52N55-12111	120	52N56-22021	83	52N57-52161	78	52N97-42011	102
52N55-30401	151	52N56-22021	83	52N57-60451	152	52N97-42021	102
52N55-30401	151	52N56-22021	84	52N57-60501	2	52N97-42031	102
52N55-30451	152	52N56-22021	85	52N57-60511	2	52N97-42041	102
52N55-30501	160	52N56-22021	85	52N57-62201	12	52N97-42051	102
52N55-30501	160	52N56-22021	86	52N57-72001	156	521A2-42001	39
52N55-30511	160	52N56-22201	162	52N57-72001	157	521A2-42061	76
52N55-30511	160	52N56-22201	162	52N58-10201	154	522A1-10201	4
52N55-32051	155	52N56-22401	82	52N58-10211	159	522A2-10401	132
52N55-32051	155	52N56-52001	12	52N58-10221	159	522A2-10401	141
52N55-32061	155	52N56-72001	73	52N58-10301	154	522A2-11601	141
52N55-32061	155	52N56-92001	77	52N58-10301	159	522A2-18011	138
52N55-32091	155	52N56-92101	77	52N58-10311	155	522A2-18021	138
52N55-32091	155	52N56-92201	77	52N58-12201	154	522A2-18031	138
52N55-32091	155	52N56-92211	77	52N58-12501	154	522A2-18041	138
52N55-32091	155	52N57-E2001	83	52N58-12501	159	522A2-18051	138
52N55-32101	155	52N57-E2001	83	52N58-12511	154	522A2-18071	138

PARTS NUMBER INDEX

Part No.	Fig.No.	Part No.	Fig.No.	Part No.	Fig.No.	Part No.	Fig.No.
522A2-18081	138	522Q6-82001	105	529F3-82621	192	534A3-82531	190
522A2-18091	138	522Q6-82011	105	529F3-82631	192	534A3-82541	192
522A2-18101	138	522Q6-82021	105	529F3-82641	192	534A3-82551	192
522A2-18111	138	52356-80302	111	529F3-82801	192	534A3-82561	192
522A2-18121	138	52356-80302	113	529F3-82811	192	534A3-82571	192
522A2-18131	138	52356-80302	115	529F3-82821	192	534A3-82581	192
522A2-18161	138	52356-80302	117	529F3-82831	192	534A3-82701	192
522A2-18171	138	524T3-84031	188	529F7-22001	57	534A3-82711	192
522A2-18201	138	524T3-84031	211	529F7-52241	79	534A3-82721	192
522A2-18211	138	524W3-83091	21	529F7-52241	81	534A3-82731	192
522A2-18221	138	524W5-12091	119	530C1-42001	48	534A3-82741	192
522A2-18281	138	52436-80701	115	530C3-82361	40	534A4-22001	121
522A2-18301	138	52436-80701	115	531A0-52521	45	534A4-22011	121
522A2-18311	138	52436-82101	103	531A0-52521	45	534A5-00401	124
522A2-18321	138	52436-82101	104	532A1-70201	19	534A5-00411	124
522A2-18331	138	52436-82101	110	532A1-70201	20	534A5-00411	124
522A2-18341	138	52436-82101	110	532N6-52011	11	534A5-00411	124
522A2-18352	138	52436-82111	103	534A0-60011	4	534A7-02001	40
522A2-18361	138	52436-82111	104	534A0-62001	4	534A7-50601	79
522A2-18371	138	52436-82111	110	534A0-62011	4	534A7-50601	80
522A2-18391	138	52436-82111	110	534A2-74051	204	534A7-50601	81
522A2-18541	141	52436-82121	103	534A2-74051	212	534A7-72001	31
522A2-18551	141	52436-82121	104	534A2-74301	204	534A7-72001	32
522A2-18561	141	52436-82121	110	534A2-74301	212	534A7-72001	33
522A2-18571	141	52436-82121	110	534A3-82311	190	534A7-72001	34
522A2-18581	141	52436-82151	107	534A3-82311	191	534A9-22001	121
522A2-18591	141	52672-82073	190	534A3-82311	192	534A9-22011	121
522A2-42001	40	528F3-82021	194	534A3-82311	193	534A9-22211	41
522A3-82441	192	528F3-82031	194	534A3-82311	194	534A9-92131	45
522A3-82641	190	528F3-82041	192	534A3-82321	192	534A9-92131	45
522A3-82641	192	528F3-82051	192	534A3-82331	190	534F1-64401	204
522A3-82841	190	528F3-82061	192	534A3-82331	192	534F1-64401	212
522A3-82841	192	528F3-82071	192	534A3-82341	190	534F1-64411	204
522A3-83041	192	528F3-82081	192	534A3-82341	192	534F1-64411	212
522A3-83061	192	529F1-42201	53	534A3-82351	192	534F2-74001	204
522A3-83061	194	529F1-42251	53	534A3-82361	192	534F2-74001	212
522A3-83241	192	529F1-42251	80	534A3-82361	194	534F3-82001	111
522A3-83241	194	529F1-42251	81	534A3-82371	192	534F3-82001	113
522A3-83441	192	529F3-70401	171	534A3-82381	192	534F3-82001	115
522A3-83461	192	529F3-70411	172	534A3-82391	192	534F3-82001	117
522A3-83641	192	529F3-70411	173	534A3-82401	194	534F6-80171	106
522A3-83661	192	529F3-70421	174	534A3-82411	194	534F6-80271	117
522A3-83841	192	529F3-82061	194	534A3-82421	190	534F6-80402	105
522A3-83861	192	529F3-82071	194	534A3-82421	191	534F6-80412	105
522A7-12211	39	529F3-82081	194	534A3-82421	192	534F6-80422	105
522A7-22011	57	529F3-82091	194	534A3-82421	193	534F6-83002	107
522B0-92021	7	529F3-82101	188	534A3-82421	194	534F6-85001	106
522B0-92021	8	529F3-82101	211	534A3-82431	192	534F7-40502	105
522B0-92031	7	529F3-82111	188	534A3-82441	190	534F7-40502	105
522B0-92031	8	529F3-82111	211	534A3-82441	192	53456-82052	109
522B0-92041	7	529F3-82151	192	534A3-82451	190	53456-82062	109
522B0-92041	8	529F3-82242	194	534A3-82451	192	53457-42151	108
522B0-92051	7	529F3-82252	194	534A3-82461	192	535C8-92051	53
522B0-92051	8	529F3-82501	188	534A3-82471	192	535C9-92011	46
522Q6-80301	109	529F3-82511	188	534A3-82471	194	535H3-82261	142
522Q6-80311	109	529F3-82521	188	534A3-82481	192	535H3-82261	142
522Q6-80321	109	529F3-82531	188	534A3-82491	192	536B6-60302	10
522Q6-80402	115	529F3-82541	188	534A3-82501	192	536G2-82021	190
522Q6-80412	115	529F3-82601	192	534A3-82511	194	536G2-82181	190
522Q6-80422	115	529F3-82611	192	534A3-82521	194	536G2-82181	191

PARTS NUMBER INDEX

Part No.	Fig.No.	Part No.	Fig.No.	Part No.	Fig.No.	Part No.	Fig.No.
536G2-82181	192	539A7-52041	78	55593-62061	70	577P3-74011	213
536G2-82181	193	539A7-52101	80	55593-62551	209	577P3-74011	213
536G2-82181	194	539A7-52101	81	55792-52601	78	577P8-74001	205
536G2-82281	190	539A8-22151	72	55792-52611	78	62A89-21811	206
536G3-82001	190	539A8-92251	53	55792-52621	78	62A89-21811	214
536G3-82001	192	539A8-92251	80	55792-52641	78	62A89-21831	206
536G3-82011	190	539A8-92251	81	558A9-92001	44	62A89-21831	206
536G3-82011	192	539A9-02011	71	558A9-92001	45	62A89-21831	214
536G3-82021	192	539A9-32001	124	558A9-92001	45	62A89-21831	214
536G3-82031	192	539F6-80201	105	558A9-92001	46	62A89-21851	206
536G3-82041	192	539F6-80301	115	558A9-92001	79	62A89-21851	206
536G3-82041	194	539F7-40401	104	558A9-92001	81	62A89-21851	206
536G3-82051	192	539F7-40401	110	55952-18021	138	62A89-21851	214
536G3-82061	192	539F7-40411	110	56110-63521	57	62050-12331	213
536G3-82071	192	539F7-40501	108	57045-42141	56	62050-12331	221
536G3-82081	194	539F7-40511	113	57045-42141	56	62150-14321	224
536G3-82091	194	539F7-40521	114	57045-52151	101	62459-23371	206
536G3-82101	192	539F7-40601	104	571A3-82361	190	62459-23371	206
536G3-82111	192	539F7-40601	110	571A3-82361	191	62459-23371	206
536G3-82121	192	539F7-40611	110	571A3-82361	192	62459-23371	214
536G3-82131	192	539F7-40701	108	571A3-82361	193	63056-56501	107
536G3-82141	192	539F7-40711	113	571A3-82361	194	63110-18901	211
536G3-82201	39	539F7-40721	114	571A6-82081	115	63110-18911	211
53651-12551	3	539H6-52051	16	577H2-82021	190	63110-18921	188
53651-12551	4	539H6-52151	16	577H3-82151	190	63110-18921	211
53652-82011	190	539H6-52251	11	577H3-82151	191	63130-15301	213
53652-82011	192	539H6-52351	11	577H3-82151	192	63130-15301	221
53652-82401	190	542F3-80101	162	577H3-82151	193	641B0-12701	121
53652-82401	192	542F3-80201	163	577H3-82151	194	641B0-12751	121
53652-82541	190	542F3-82001	162	577H3-82161	192	89140-00006	132
53652-82551	190	542F3-82001	162	577H3-82171	190	93956-59279	31
53656-82001	109	542F3-82001	163	577H3-82171	192	93956-59279	32
53657-42053	108	542F3-82011	162	577H3-82181	190	93956-59279	33
53658-43001	208	542F3-82011	162	577H3-82181	192	93956-59279	34
53658-43001	223	542F3-82011	163	577H3-82191	192	97103-35431	118
53658-43011	208	542F3-82021	162	577H3-82201	192		
53658-43011	223	542F3-82021	162	577H3-82201	194		
53658-43021	208	542F3-82021	163	577H3-82211	192		
53658-43021	223	54236-83011	112	577H3-82221	192		
53658-43031	208	54236-83011	114	577H3-82231	192		
53658-43031	223	54236-83011	116	577H3-82241	194		
53658-43041	208	54236-83021	112	577H3-82251	194		
53658-43041	223	54236-83021	114	577H3-82261	192		
53675-55051	182	54236-83021	116	577H3-82701	192		
53675-55051	201	54236-83031	112	577H3-82711	192		
53675-55051	217	54236-83031	114	577H3-82721	192		
53675-55051	224	54236-83031	116	577H3-82731	192		
537A6-60302	9	54315-32561	55	577H3-82741	190		
537A6-60302	9	54456-80201	110	577H5-13051	124		
538G3-82201	40	54456-80211	110	577H5-13051	124		
539A0-82201	20	54456-80421	108	577H5-13051	124		
539A2-72121	40	54456-82201	105	577P3-74001	203		
539A2-82051	190	54456-82201	106	577P3-74001	205		
539A5-32361	45	54456-82224	105	577P3-74001	211		
539A5-32361	45	54456-82224	106	577P3-74001	213		
539A5-92141	21	54457-40201	109	577P3-74001	213		
539A5-92251	21	54612-42021	3	577P3-74001	213		
539A6-22021	39	54612-72281	39	577P3-74011	203		
539A6-52051	16	55593-02371	174	577P3-74011	205		
539A6-52151	16	55593-60301	70	577P3-74011	211		

No.PF−2B8C

2005年　2月　発行
2005年　8月　改訂
2005年　12月　改訂

TCM株式会社
本　社　大阪市西区京町堀1−15−10

発 行　TCMテクノ株式会社

ISSUED:FEBRUARY,2005
REVISED:AUGUST,2005
REVISED:DECEMBER,2005

TCM CORPORATION
INTERNATIONAL MARKETING DIVISION : 1-15-5, Nishi−shimbashi, Minato−ku, Tokyo
105−0003, Japan
FAX : Japan +81−3−35918152, 3−35918153

無断で転載・複製を禁ず
All rights reserved.

SA−0512001(H)　Printed in Japan